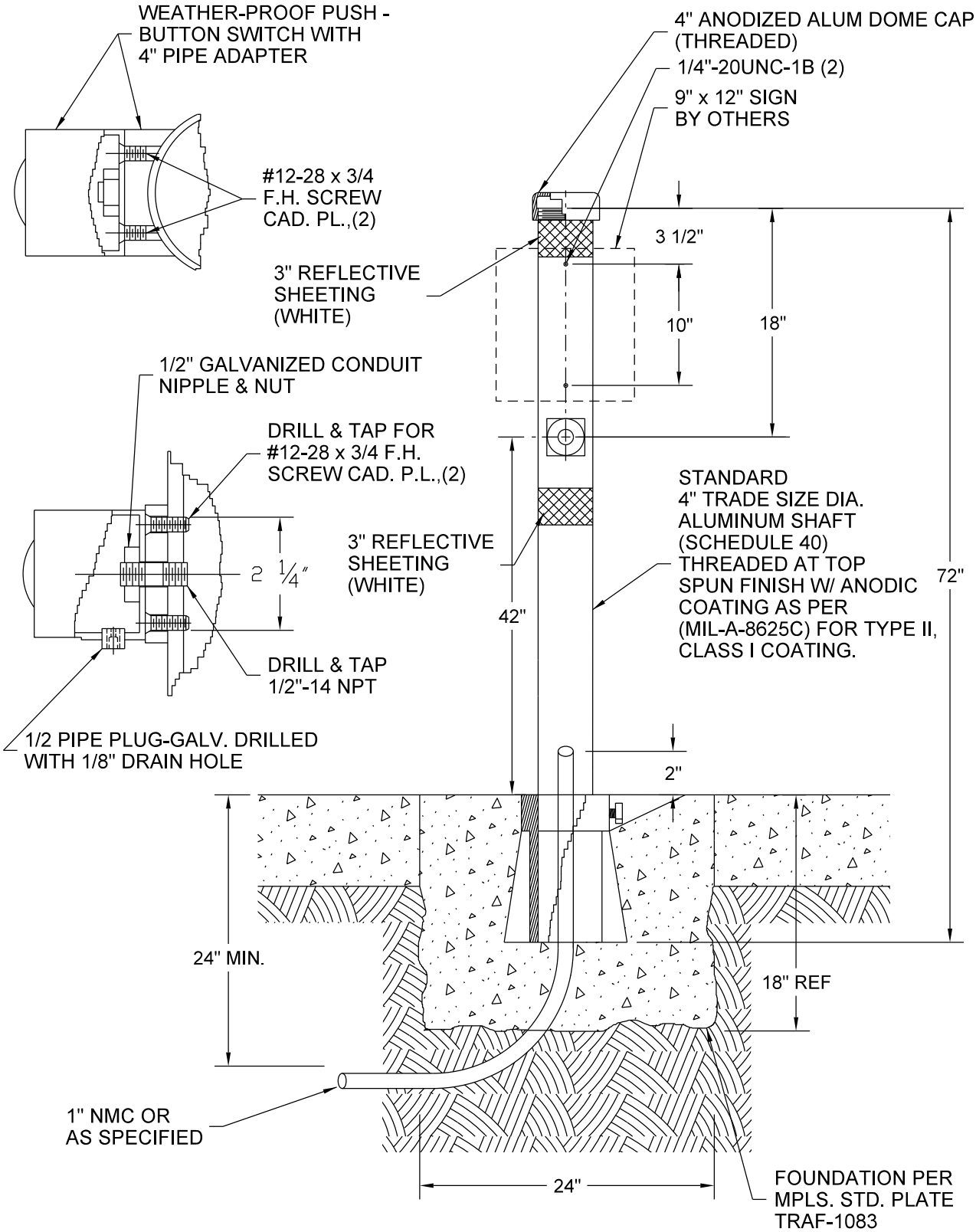


NO SCALE

| | | | |
|---|---|---|---|
| **MINNEAPOLIS** DEPARTMENT OF PUBLIC WORKS | | POLE - SIGNAL<br><br>PEDESTAL PUSH BUTTON<br>REFERENCE PLATE: TRAF-1083 | STANDARD PLATE NO. TRAF-1260-R1 |
| DRAWN: CLK | DATE: 6/25/13 | | |
| APPROVED: DRP | DATE: 6/25/13 | | |