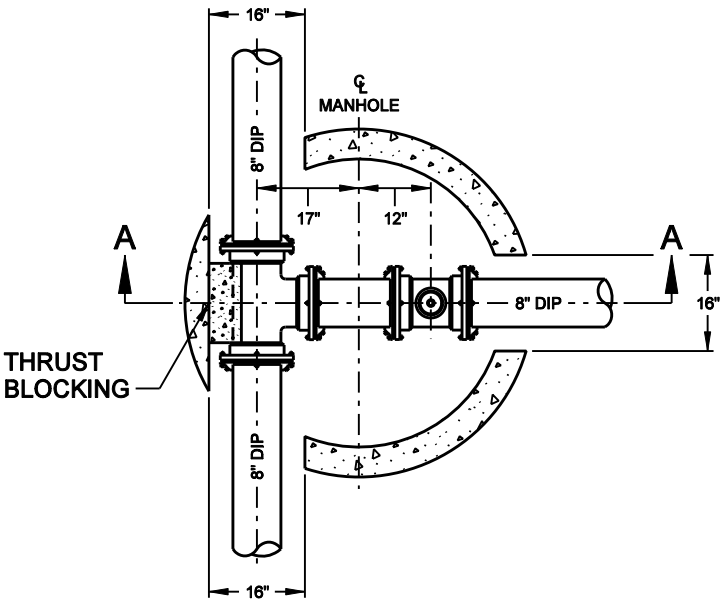

TOP VIEW

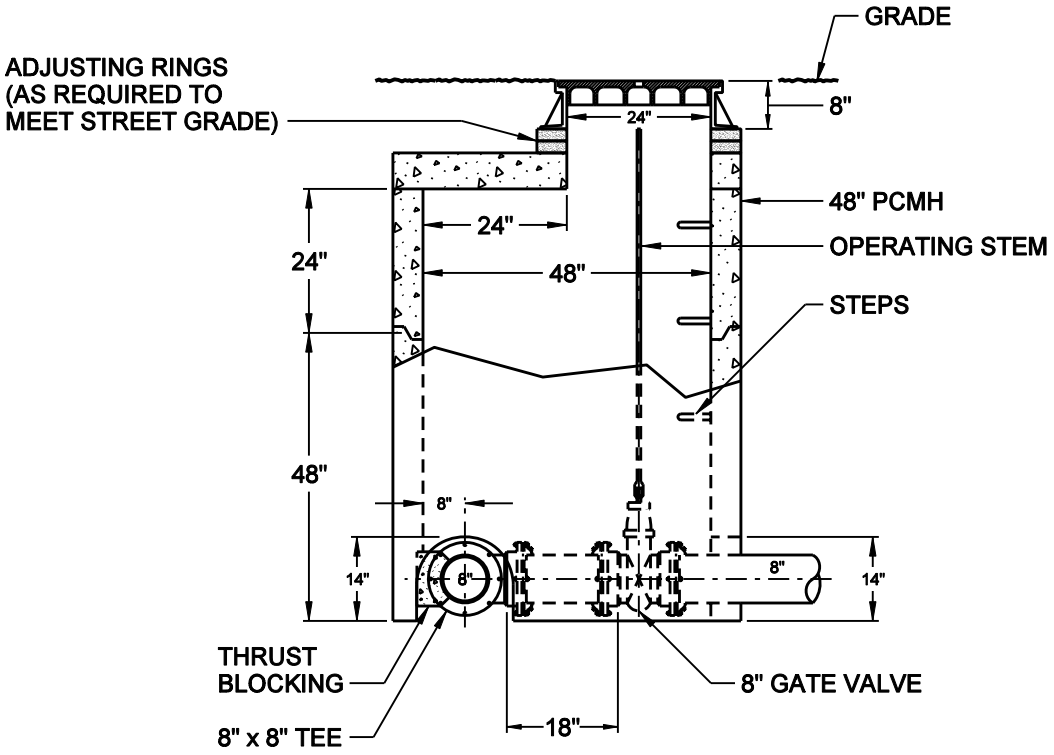

SECTION A-A

NOT TO SCALE

MINNEAPOLIS DEPARTMENT OF PUBLIC WORKS		8" x 8" TEE WITH GATE VALVE IN 48" MANHOLE	STANDARD PLATE NO. WATR-2003A-R1
DRAWN: TDS	DATE: 1/1/12		
APPROVED: RCE	DATE: 1/1/12		