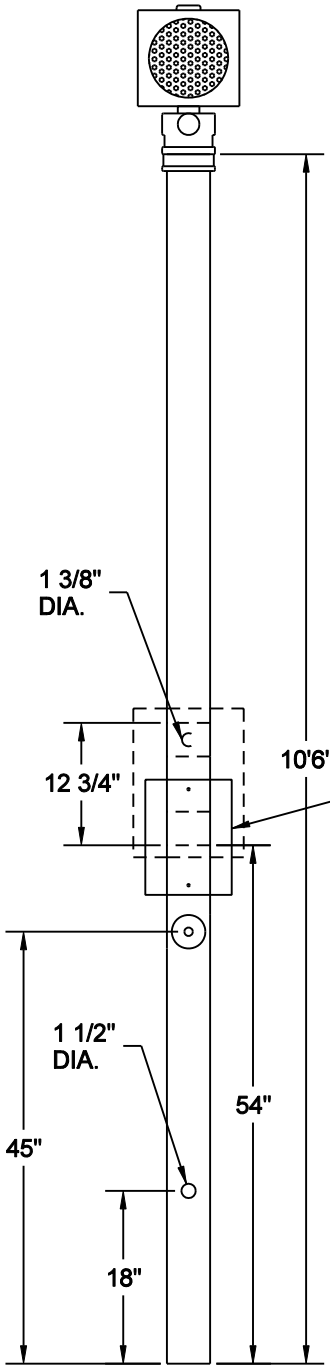

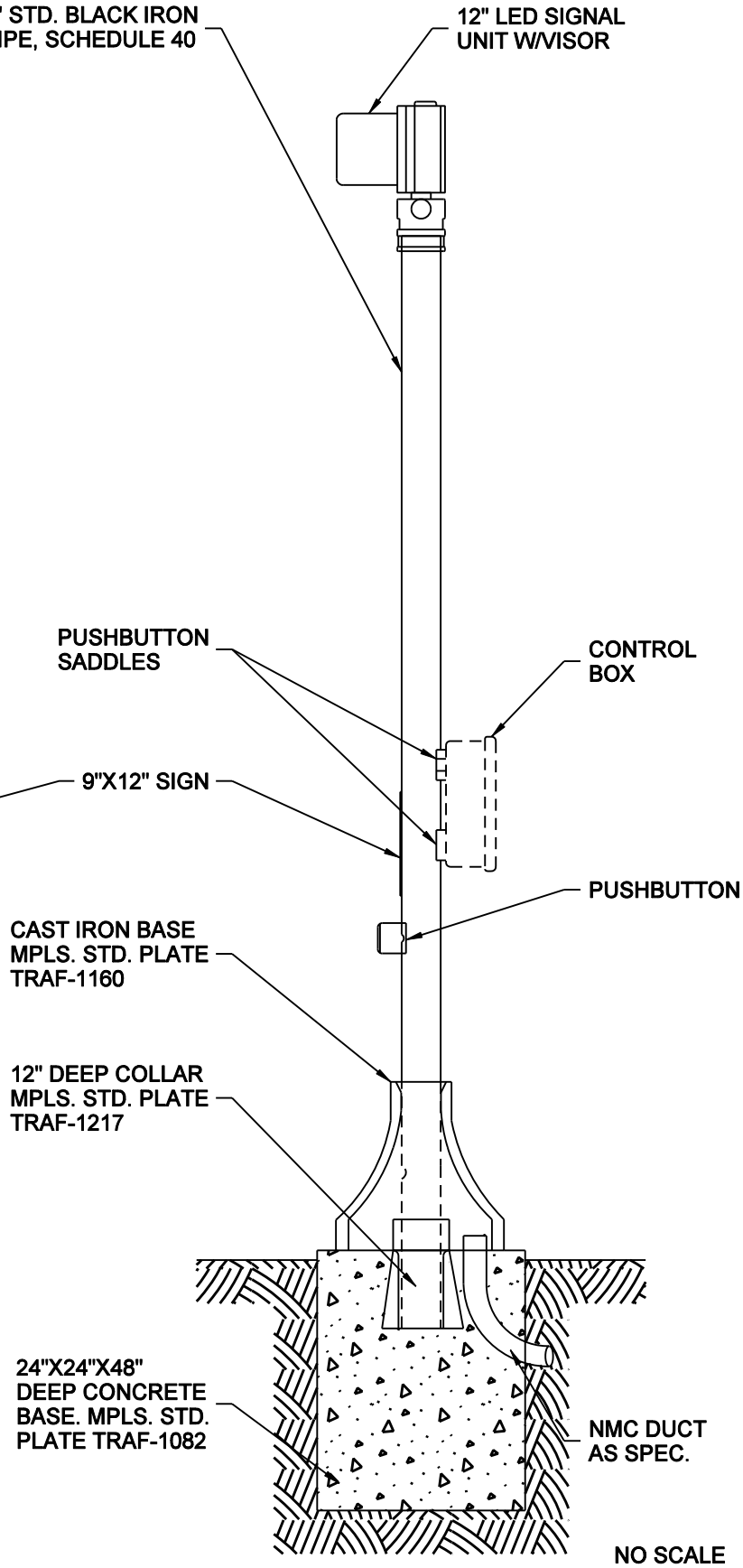

NO SCALE

MINNEAPOLIS DEPARTMENT OF PUBLIC WORKS		POLE - SIGNAL PEDESTAL FLASHER ASSEMBLY REFERENCE PLATES: TRAF-1082, TRAF-1160, TRAF-1217	STANDARD PLATE NO. TRAF-1245
DRAWN: LPK	DATE: 1/1/11		
APPROVED: DRP	DATE: 1/1/11		