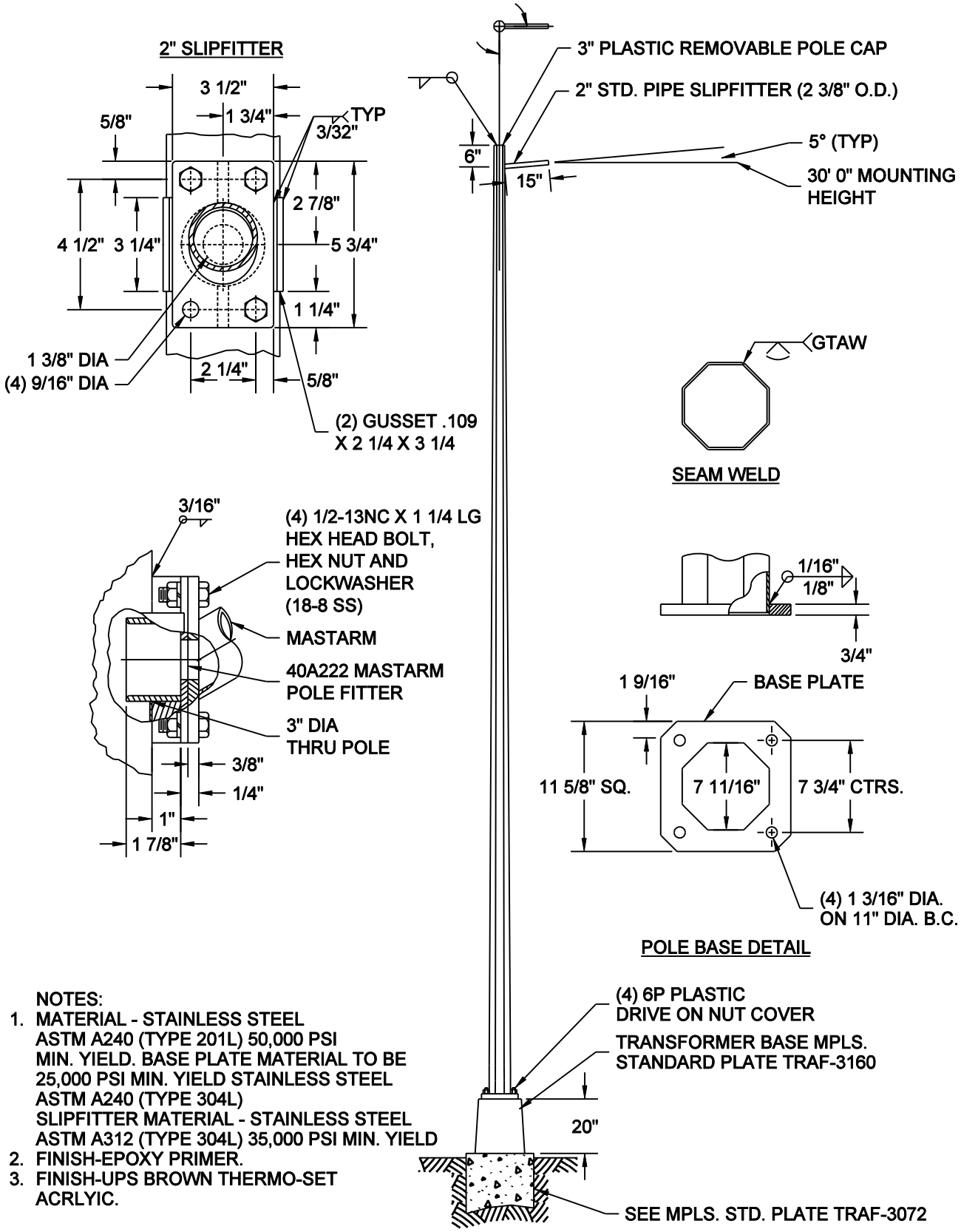

NOTES:

1. MATERIAL - STAINLESS STEEL
   ASTM A240 (TYPE 201L) 50,000 PSI
   MIN. YIELD. BASE PLATE MATERIAL TO BE
   25,000 PSI MIN. YIELD STAINLESS STEEL
   ASTM A240 (TYPE 304L)
   SLIPFITTER MATERIAL - STAINLESS STEEL
   ASTM A312 (TYPE 304L) 35,000 PSI MIN. YIELD
2. FINISH-EPOXY PRIMER.
3. FINISH-UPS BROWN THERMO-SET
   ACRLYIC.

NO SCALE

MINNEAPOLIS DEPARTMENT OF PUBLIC WORKS		STANDARD - ST. LIGHT M-30' STAINLESS STEEL REFERENCE PLATE: TRAF-3072, TRAF-3160	STANDARD PLATE NO. TRAF-3292-R1
DRAWN: CLK	DATE: 5/3/11		
APPROVED: DRP	DATE: 5/3/11		