TYPICAL STACK CONNECTION

CLAY PIPE SEWERS HAVING A DEPTH BETWEEN SPRING LINE AND STREET GRADE IN EXCESS OF 18'

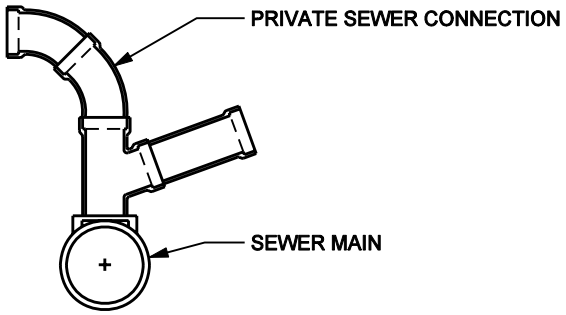

TYPICAL BREECH CONNECTIONS TO BRICK SEWERS

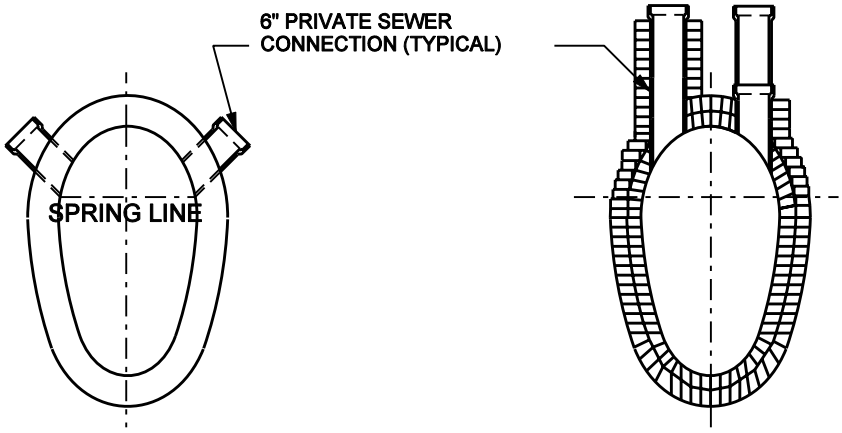

FOR SEWERS HAVING A DEPTH BETWEEN SPRING LINE AND STREET GRADE LESS THAN 18 FT. CONNECTIONS TO BRICK SEWERS

FOR SEWERS HAVING A DEPTH BETWEEN SPRING LINE AND STREET GRADE IN EXCESS OF 18 FT. CONNECTIONS ARE PLACED AT 1/2 WAY BETWEEN SPRING LINE AND CENTER OF ARCH TOP OF CONNECTIONS ARE TO BE BROUGHT UP TO WITHIN 16 FT. OF STREET GRADE CONNECTIONS TO BRICK SEWERS

FOR BRICK SEWERS HAVING A DEPTH BETWEEN SPRING LINE AND STREET GRADE IN EXCESS OF 18 FT.

2 RINGS OF BRICK
33" BRICK EGG AND LARGER
BREECH/STACK ORIENTATION TOP VIEW

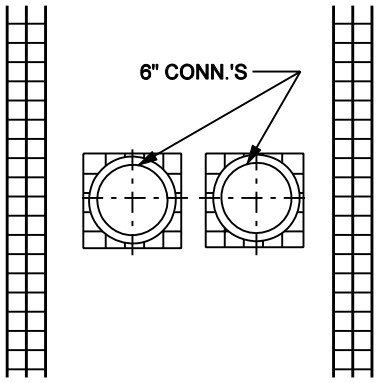

1 RING OF BRICK
30" BRICK EGG OR LESS
BREECH/STACK CONNECTION ORIENTATION TOP VIEW
WHERE SINGLE CONNECTIONS OCCUR
THE RIGHT HAND ONE COMES FIRST

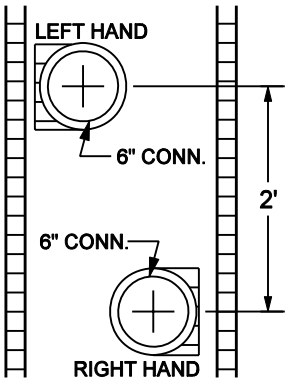

REFERENCE PLATE ONLY

MINNEAPOLIS CUSTOM
MNDOT SPEC. REF. 2506, 3612
NOT TO SCALE

MINNEAPOLIS DEPARTMENT OF PUBLIC WORKS		BREACH AND STACKED CONNECTIONS	STANDARD PLATE NO. SEWR-5013
DRAWN: DCD	DATE: 1/07		
APPROVED: HRS	DATE: 1/07		