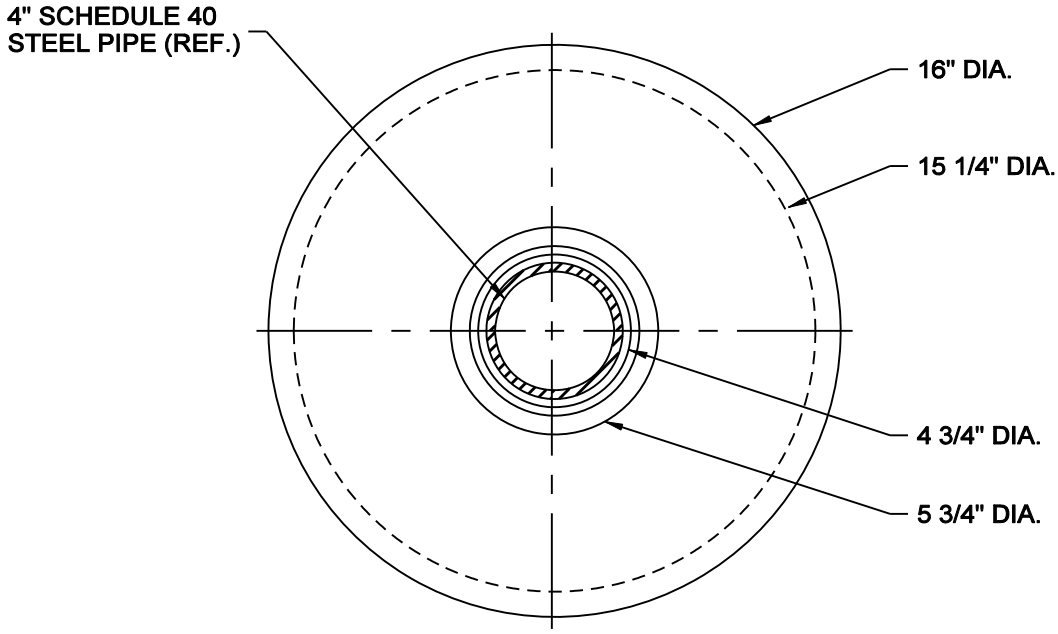

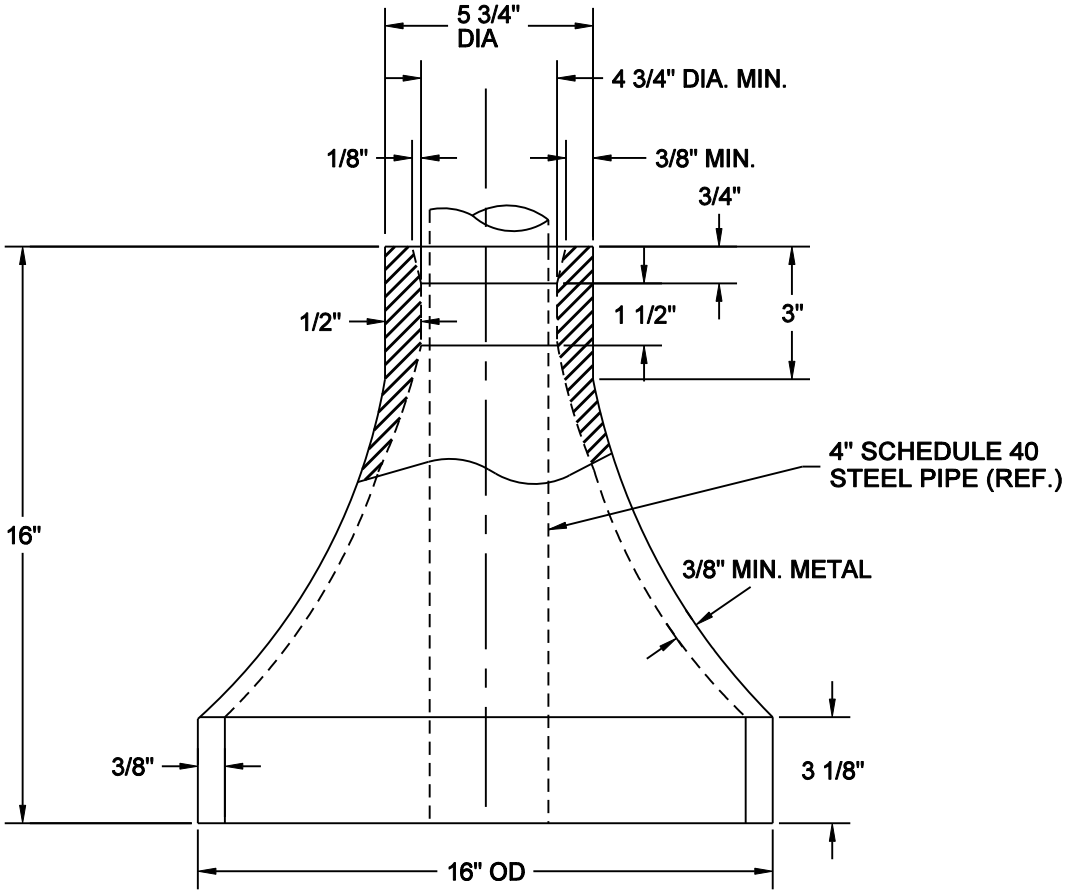

NO SCALE

MINNEAPOLIS DEPARTMENT OF PUBLIC WORKS		BASE - SIGNAL PEDESTAL - FLASHER AND PUSH BUTTON	STANDARD PLATE NO. TRAF-1160
DRAWN: LPK	DATE: 1/1/11		
APPROVED: DRP	DATE: 1/1/11		