BRACKETING FOR VEHICLE/PEDESTRIAN INDICATIONS

PIPE DIMENSIONS SHOWN ARE FOR 8" AND 12" VEHICLE AND 12" X 12" PEDESTRIAN INDICATIONS

	LEGEND
	1-1/2" IRON PIPE UNLESS SPECIFIED
	90 DEG. ELBOW-THREAD BOTH ENDS.
	TEE-THREAD ALL ENDS.
	CROSS-THREAD ALL ENDS.
	POLE BRACKET 8

TYPE 10A

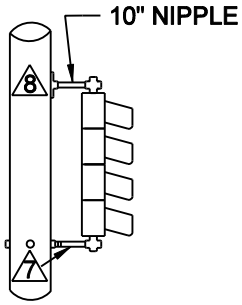

ONE WAY SIGNAL

TYPE 10B

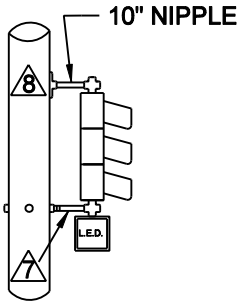

ONE WAY SIGNAL
1-SET PEDESTRAIN INDICATIONS

TYPE 10C

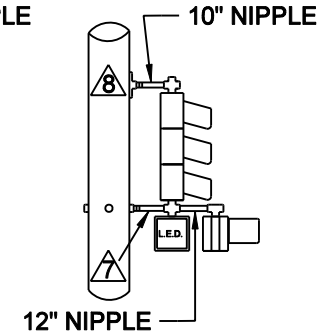

ONE WAY SIGNAL
2-SET PEDESTRAIN INDICATIONS

TYPE 20A

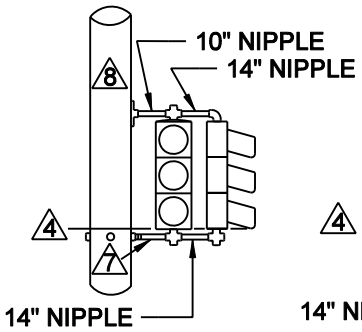

TWO WAY SIGNAL

TYPE 20B

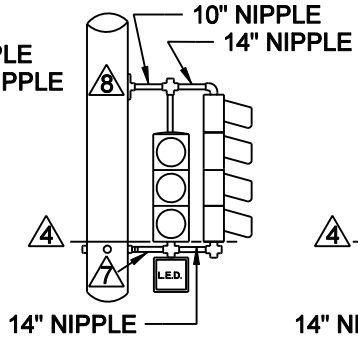

TWO WAY SIGNAL
1-SET PEDESTRAIN INDICATIONS

TYPE 20C

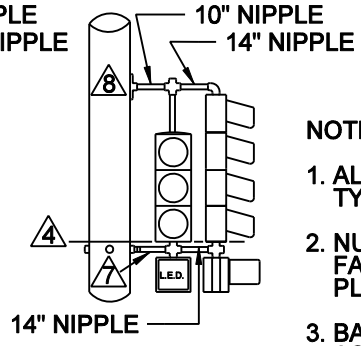

TWO WAY SIGNAL
2-SET PEDESTRAIN INDICATIONS

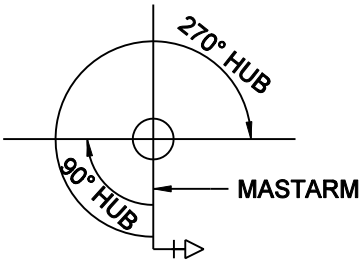

TYPE 30A (R)

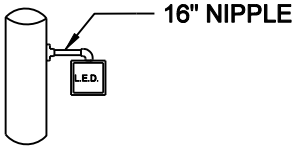

TYPE 30A (L)

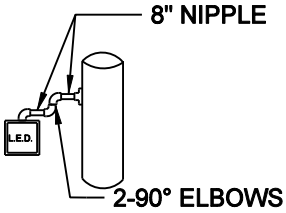

NOTES

1. ALL MOUNTING SHOWN ARE TYPICAL-SUBJECT TO MINOR REV.
2. NUMBER OF LENSES PER SIGNAL FACE SHALL BE AS REQD. IN PLANS OR SPECIAL PROVISIONS.
3. BACKGROUND SHIELDS PROVIDED AS REQD. IN PLANS OR SPECIAL PROVISIONS.
4. BOTTOMS OF LOWER LENSES IN HEAD ASSEMBLY SHALL BE AT SAME ELEVATION.
5. ALL PIPE FITTINGS SHALL BE MALLEABLE IRON.
6. UNUSED OPENING SHALL BE PLUGGED W/ ALUMINUM PIPECAPS.
7. PIPE LENGHS ARE CUT TO FIT.
8. POLE BRACKET ATTACHED BY DRILLING AND TAPPING POLE. BRACKET ATTACHED WITH 2-3/8" X 1 1/2" STEEL HEX HEAD COARSE THREADED BOLTS.
9. ALL HEAD MUST BE VERTICAL AND PARALLEL.
10. ALL PIPE FITTINGS AND HEADS SHAL BE MADE UP TIGHT.
11. ALL BRACKETS & FITTNGS SHALL BE PAINTED W/ SIGNAL YELLOW PER SPECS.

NO SCALE

MINNEAPOLIS DEPARTMENT OF PUBLIC WORKS		HEAD - SIGNAL BRACKETING - POLE-MOUNTED VEHICLE/PEDESTRIAN INDICATIONS	STANDARD PLATE NO. TRAF-1330
DRAWN: LPK	DATE: 1/1/11		
APPROVED: DRP	DATE: 1/1/11		