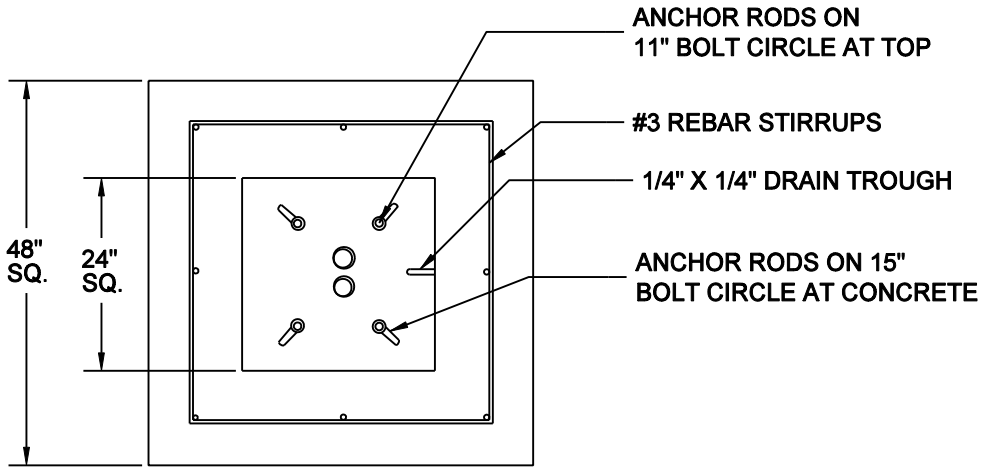

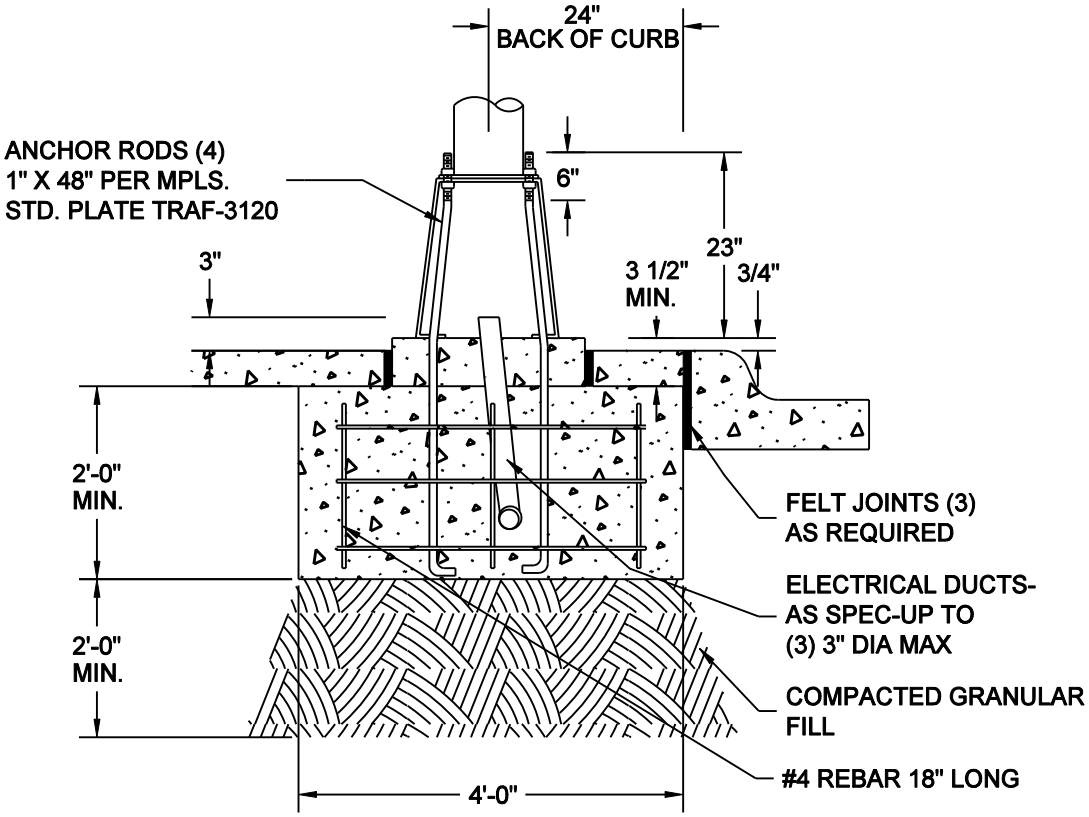

NO SCALE

MINNEAPOLIS DEPARTMENT OF PUBLIC WORKS		FOUNDATION - ST. LIGHT 30' - SQUARE CAP SPREAD REFERENCE PLATE: TRAF-3120	STANDARD PLATE NO. TRAF-3074
DRAWN: LPK	DATE: 1/1/11		
APPROVED: DRP	DATE: 1/1/11		