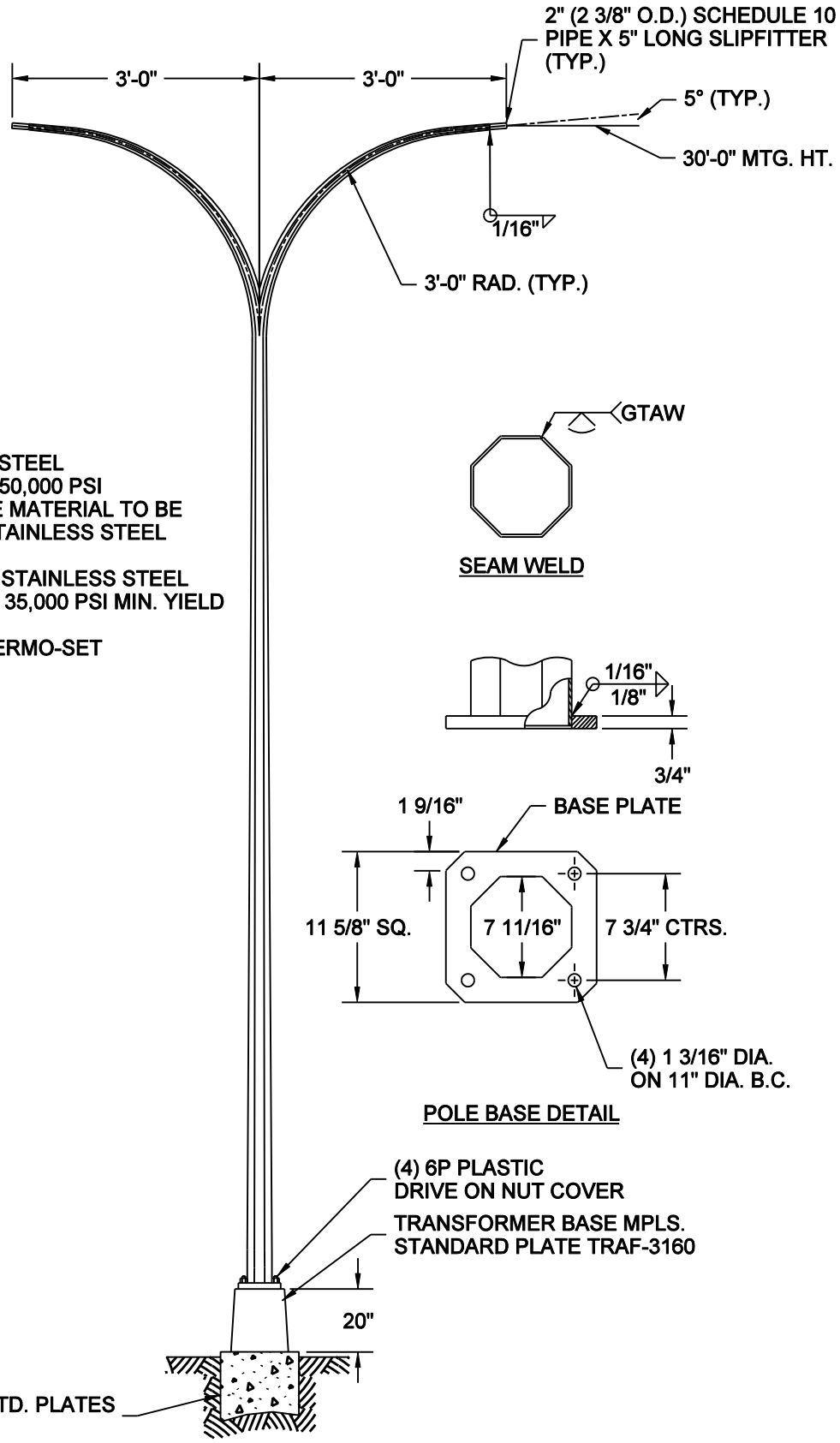

NOTES:

1. MATERIAL - STAINLESS STEEL ASTM A240 (TYPE 201L) 50,000 PSI MIN. YIELD. BASE PLATE MATERIAL TO BE 25,000 PSI MIN. YIELD STAINLESS STEEL ASTM A240 (TYPE 304L)
   SLIPFITTER MATERIAL - STAINLESS STEEL ASTM A312 (TYPE 304L), 35,000 PSI MIN. YIELD
2. FINISH-EPOXY PRIMER.
3. FINISH-UPS BROWN THERMO-SET ACRLYIC.

NO SCALE

MINNEAPOLIS DEPARTMENT OF PUBLIC WORKS		STANDARD - ST. LIGHT 3M-30' STAINLESS STEEL TWIN REFERENCE PLATES: TRAF-3072, TRAF-3160	STANDARD PLATE NO. TRAF-3211-R1
DRAWN: CLK	DATE: 5/4/11		
APPROVED: DRP	DATE: 5/4/11		