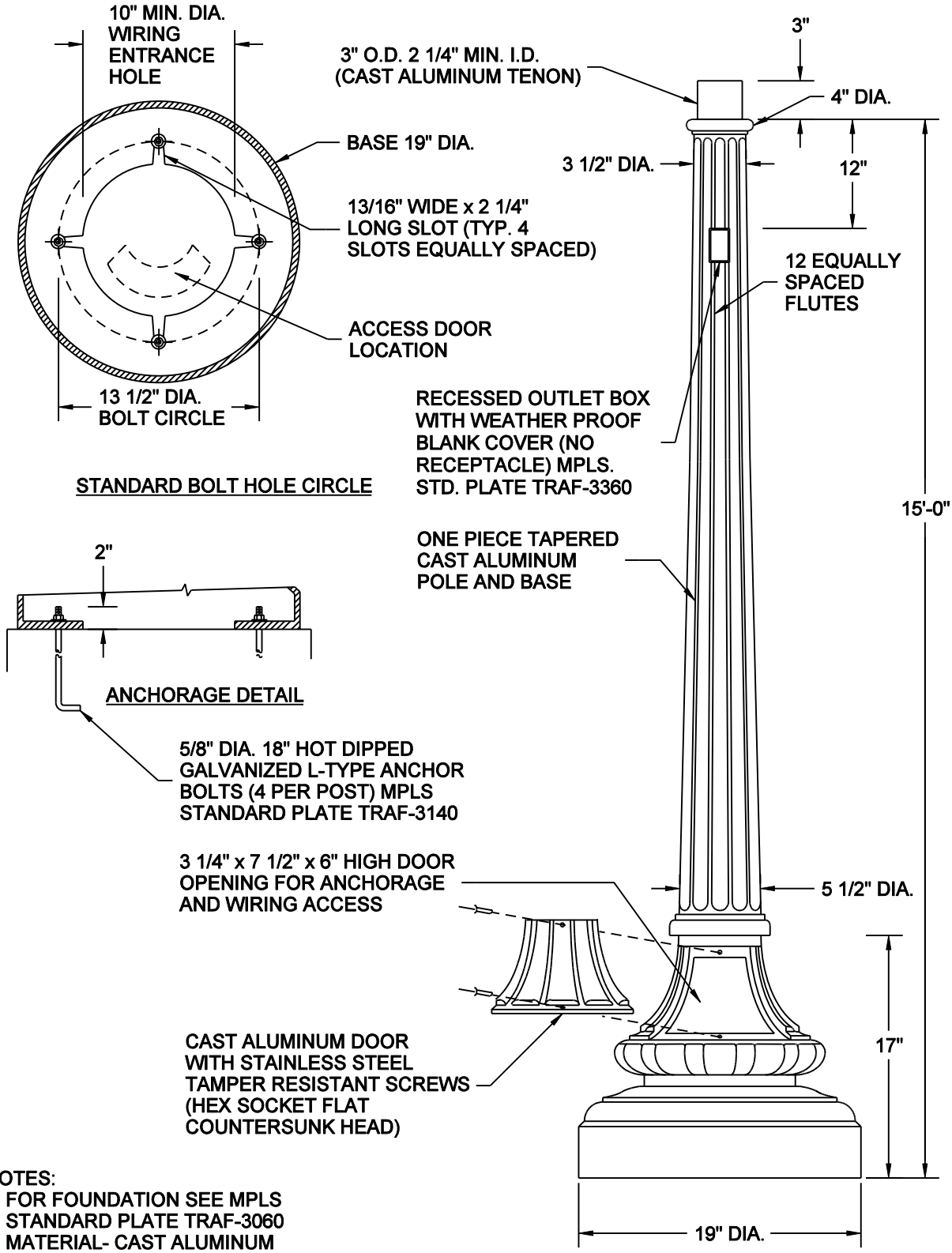

NOTES:
1. FOR FOUNDATION SEE MPLS STANDARD PLATE TRAF-3060
2. MATERIAL- CAST ALUMINUM SEE SPECIAL PROVISIONS
3. POLE & BASE FINISH SEE SPECIAL PROVISIONS

NO SCALE

MINNEAPOLIS DEPARTMENT OF PUBLIC WORKS		STANDARD - ST. LIGHT M-15' ALUMINUM W/COVER REFERNCE PLATES: TRAF-3060, TRAF-3140, TRAF-3360	STANDARD PLATE NO. TRAF-3277
DRAWN: LPK	DATE: 1/1/11		
APPROVED: DRP	DATE: 1/1/11		