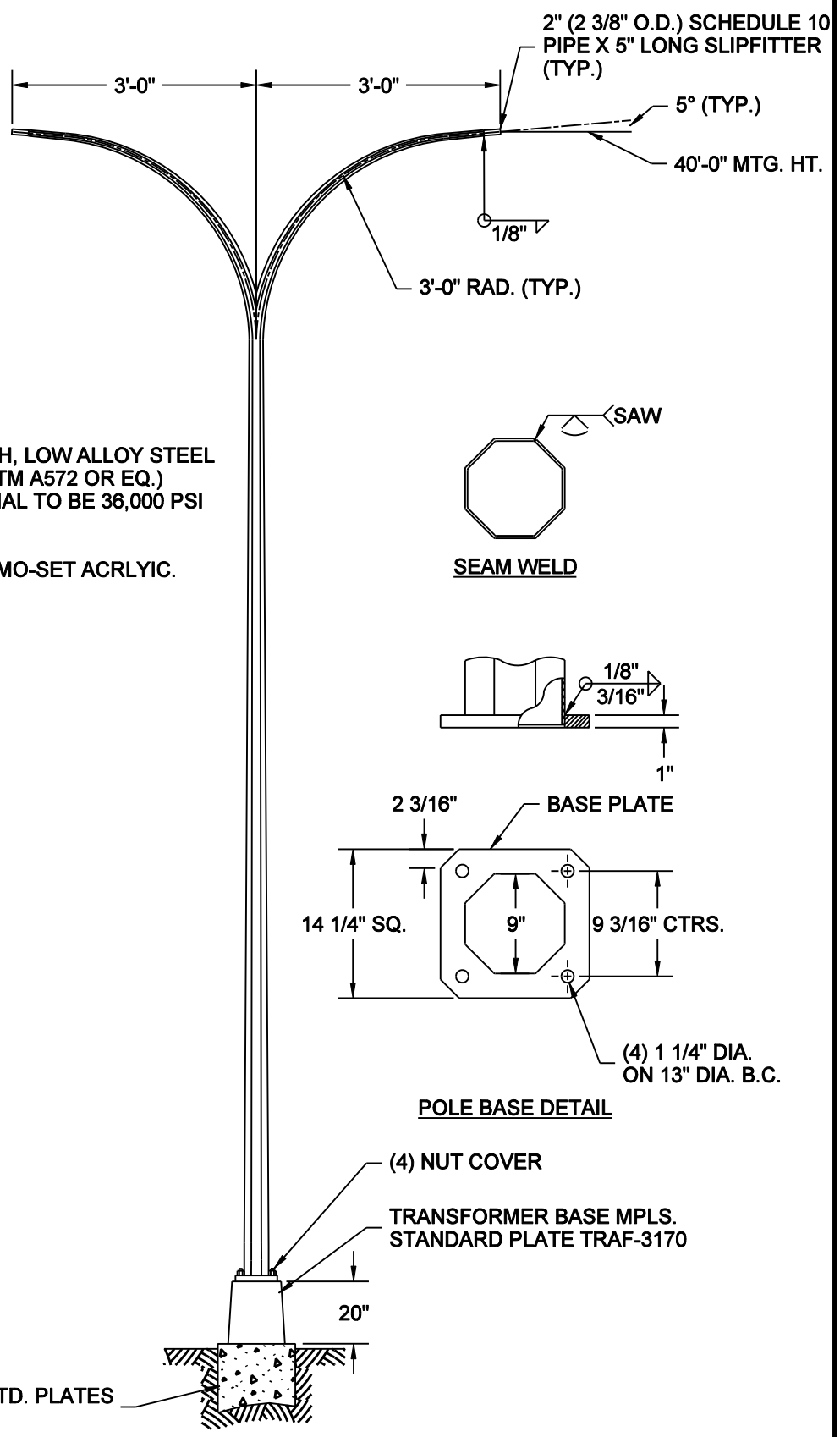

NOTES:

1. MATERIAL-HIGH STRENGTH, LOW ALLOY STEEL 50,000 PSI MIN. YIELD, (ASTM A572 OR EQ.) POLE BASE PLATE MATERIAL TO BE 36,000 PSI MIN. YIELD (ASTM A36).
2. FINISH-EPOXY PRIMER.
3. FINISH-UPS BROWN THERMO-SET ACRLYIC.

NO SCALE

MINNEAPOLIS DEPARTMENT OF PUBLIC WORKS		STANDARD - ST. LIGHT 3M-40' STEEL TWIN REFERENCE PLATES: TRAF-3080, TRAF-3170	STANDARD PLATE NO. TRAF-3235
DRAWN: LPK	DATE: 1/1/11		
APPROVED: DRP	DATE: 1/1/11		