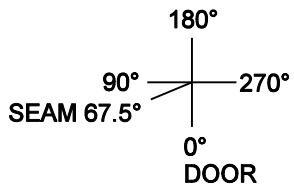

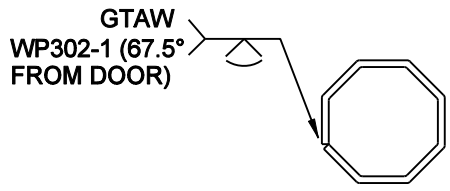

SEAM WELD

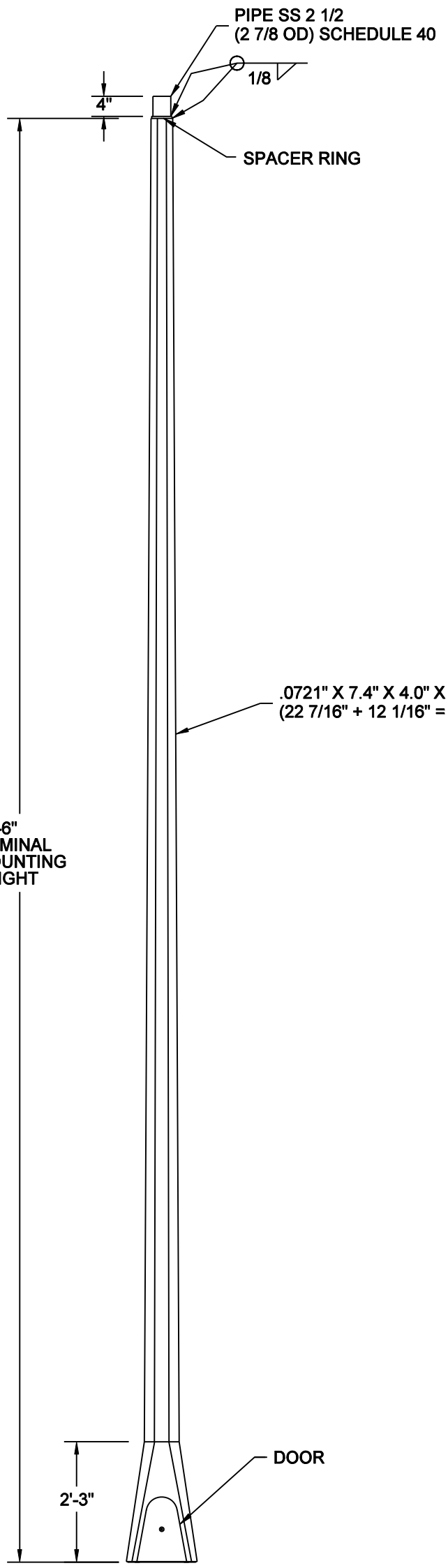

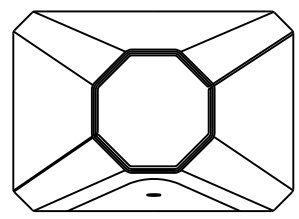

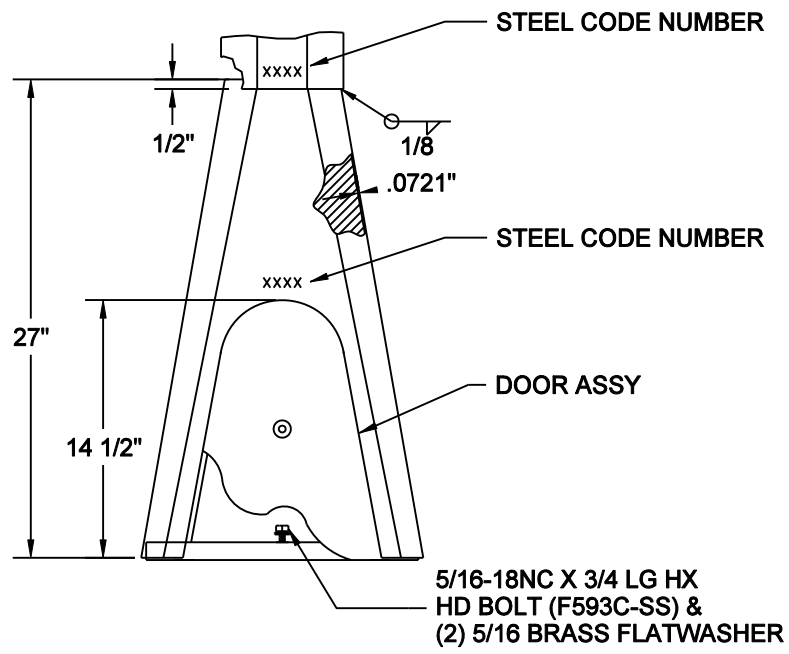

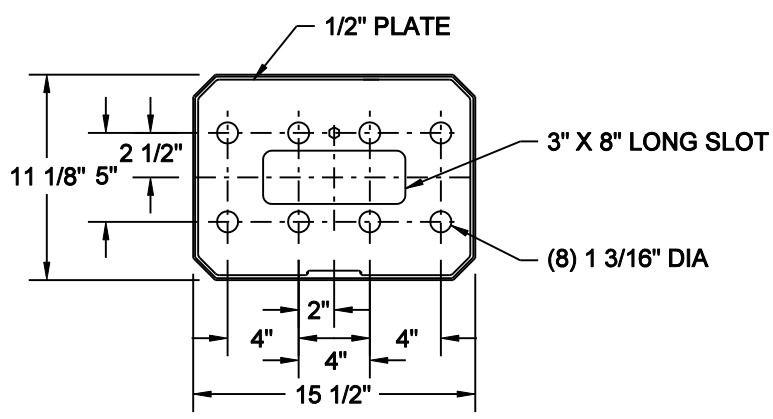

POLE M-BASE DETAIL

NOTE:

1.MATERIAL - STAINLESS STEEL ASTM A240 (TYPE 201L) 50,000 PSI MIN YIELD.
BASE PLATE MATERIAL- STAINLESS STEEL ASTM A240 (TYPE 304L), 25,000 PSI MIN. YIELD
SLIPFITTER MATERIAL- STAINLESS STEEL ASTM A312 (TYPE 304L) 35,000 PSI MIN. YIELD

2. FINISH: EPOXY PRIMER

3.FINISH: PAINTED TROPICAL BLACK

4. DO NOT GROUT BETWEEN BASE AND FOUNDATION. AIR MUST BE ALLOWED TO FLOW THROUGH THE POLE TO PREVENT MOISTURE BUILD-UP.

NO SCALE

STANDARD PLATE NO. TRAF-3252-R1

STANDARD - ST. LIGHT
M-10'-6" STAINLESS STEEL 8-BOLT - BRIDGE

MINNEAPOLIS
DEPARTMENT OF PUBLIC WORKS

DRAWN: CLK DATE: 5/4/11
APPROVED: DRP DATE: 5/4/11