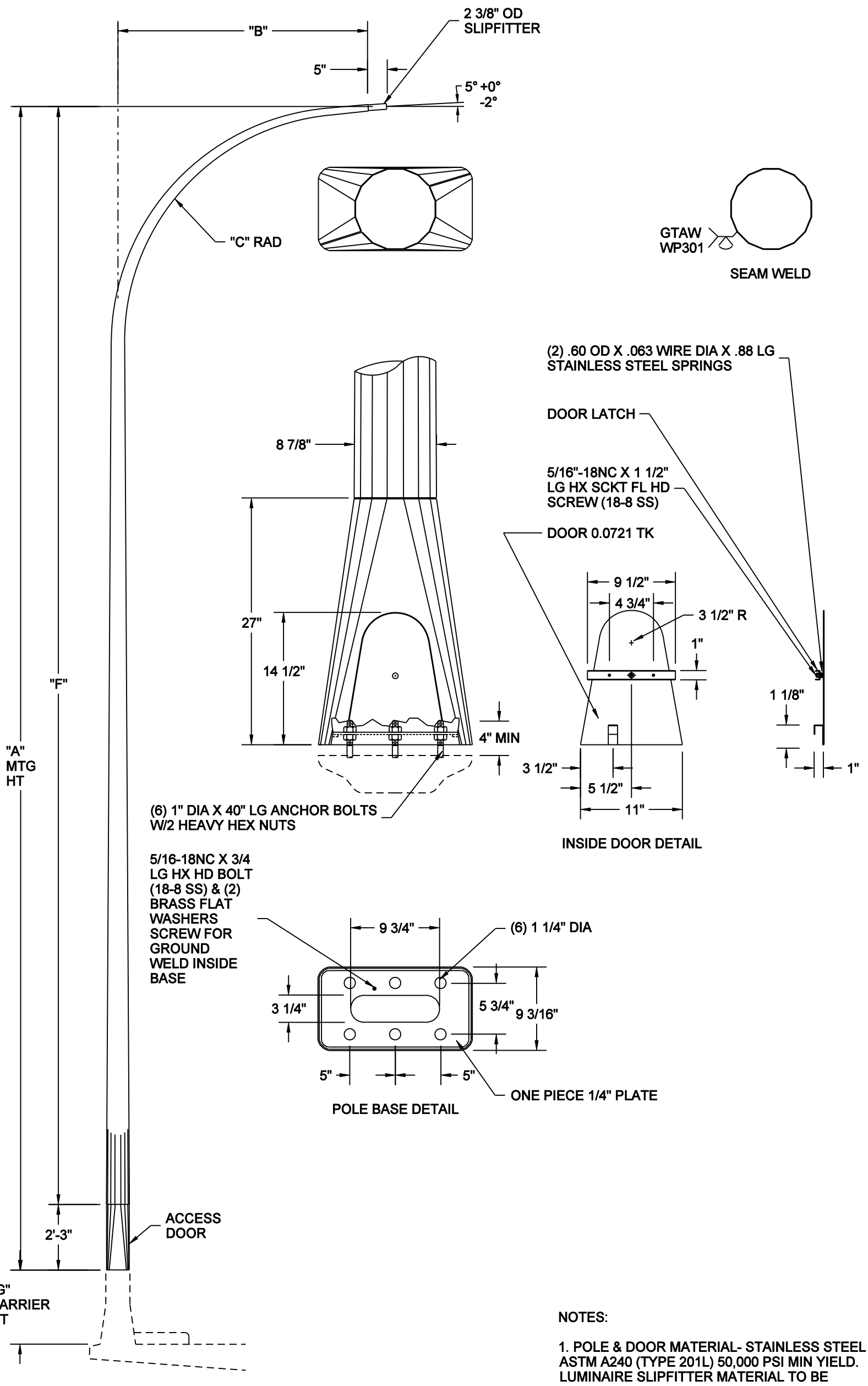

32'-4"	6'-0"	5'-0"	32'-9"		30'-1"	VARIES
32'-4"	3'-0"	3'-0"	30'-7"		30'-1"	VARIES
"A" MTG HT	"B" ARM LENGTH	"C" ARM RAD	"D" SHAFT LENGTH	"E" SHAFT WELDMENT	"F" SHAFT HT	"G" BARRIER HT

NOTES:

1. POLE & DOOR MATERIAL- STAINLESS STEEL ASTM A240 (TYPE 201L) 50,000 PSI MIN YIELD. LUMINAIRE SLIPFITTER MATERIAL TO BE STAINLESS STEEL ASTM A312 (TYPE 304L) 35,000 PSI MIN YIELD

2. FINISH- EXPOXY PRIMER & UPS BROWN THERMO-SET ACRYLIC

3. DO NOT GROUT BETWEEN BASE AND FOUNDATION. AIR MUST BE ALLOWED TO FLOW THROUGH THE POLE TO PREVENT MOISTURE BUILD-UP.

NO SCALE

STANDARD PLATE NO. TRAF-3212-R2

STANDARD - ST. LIGHT
3M-30' STAINLESS STEEL 6-BOLT - BRIDGE

MINNEAPOLIS
DEPARTMENT OF PUBLIC WORKS

DRAWN: CLK | DATE: 5/4/11
APPROVED: DRP | DATE: 5/4/11