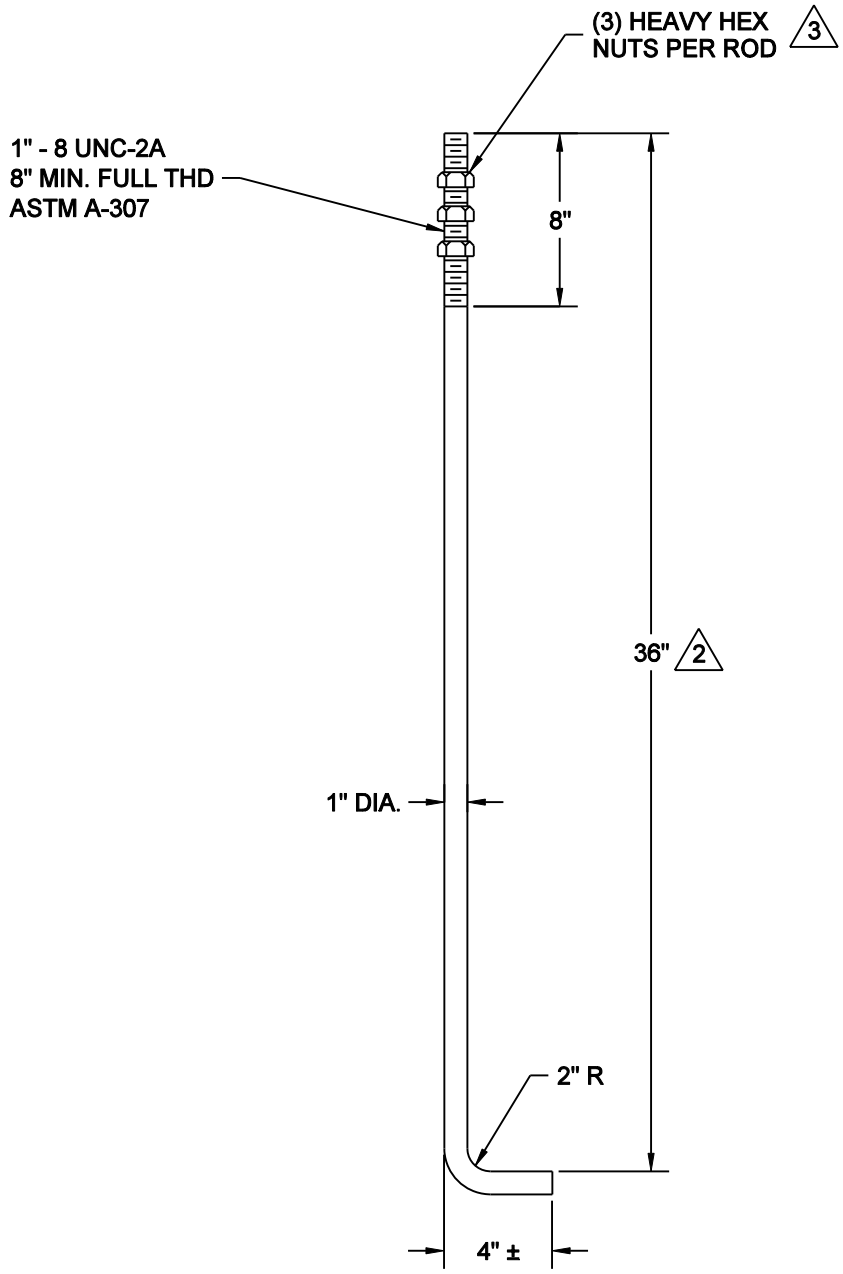

NOTES:

1. MATERIAL - STEEL, ASTM A-576
   A151 - COLD DRAWN 1018
   55,000 PSI MIN. YIELD

2. FINISH - HOT DIP GALVANIZE LENGTH INDICATED. NUTS SHALL RUN FREE AFTER PLATING.

3. RODS SHALL BE SUPPLIED WITH GALVANIZED HEAVY HEX NUTS, ASTM A-563, ASSEMBLED AFTER ROD PLATING.

NO SCALE

MINNEAPOLIS DEPARTMENT OF PUBLIC WORKS		ANCHOR ROD - ST. LIGHT 1" X 36" (DESIGN E MN/DOT)	STANDARD PLATE NO. TRAF-3115
DRAWN: LPK	DATE: 1/1/11		
APPROVED: DRP	DATE: 1/1/11		