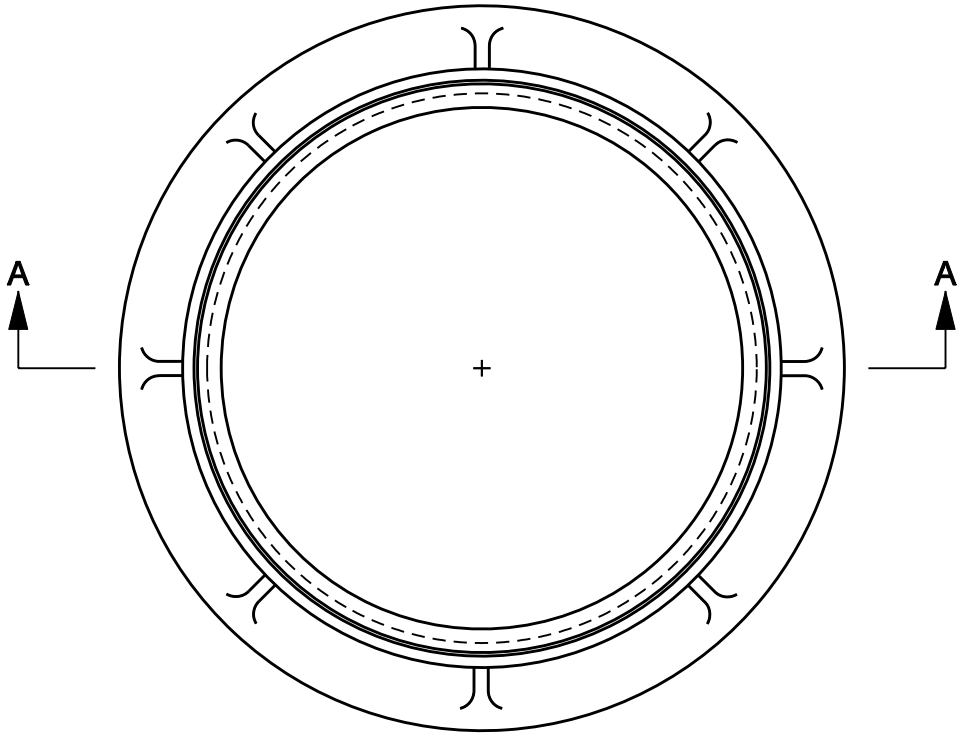

PLAN

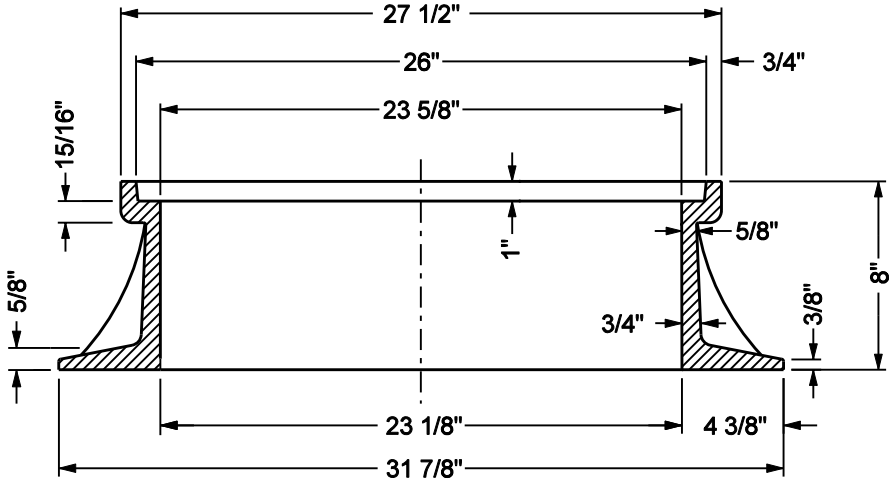

SECTION A-A

NOTES:
WEIGHT = 194 LBS.
MATERIAL: GRAY IRON ASTM A-48

MINNEAPOLIS CUSTOM
MNDOT SPEC. REF. 2506
MODIFIED MNDOT 4101D
NOT TO SCALE

MINNEAPOLIS DEPARTMENT OF PUBLIC WORKS		STANDARD MANHOLE CASTING	STANDARD PLATE NO. SEWR-2004
DRAWN: DCD	DATE: 2/07		
APPROVED: HRS	DATE: 2/07		