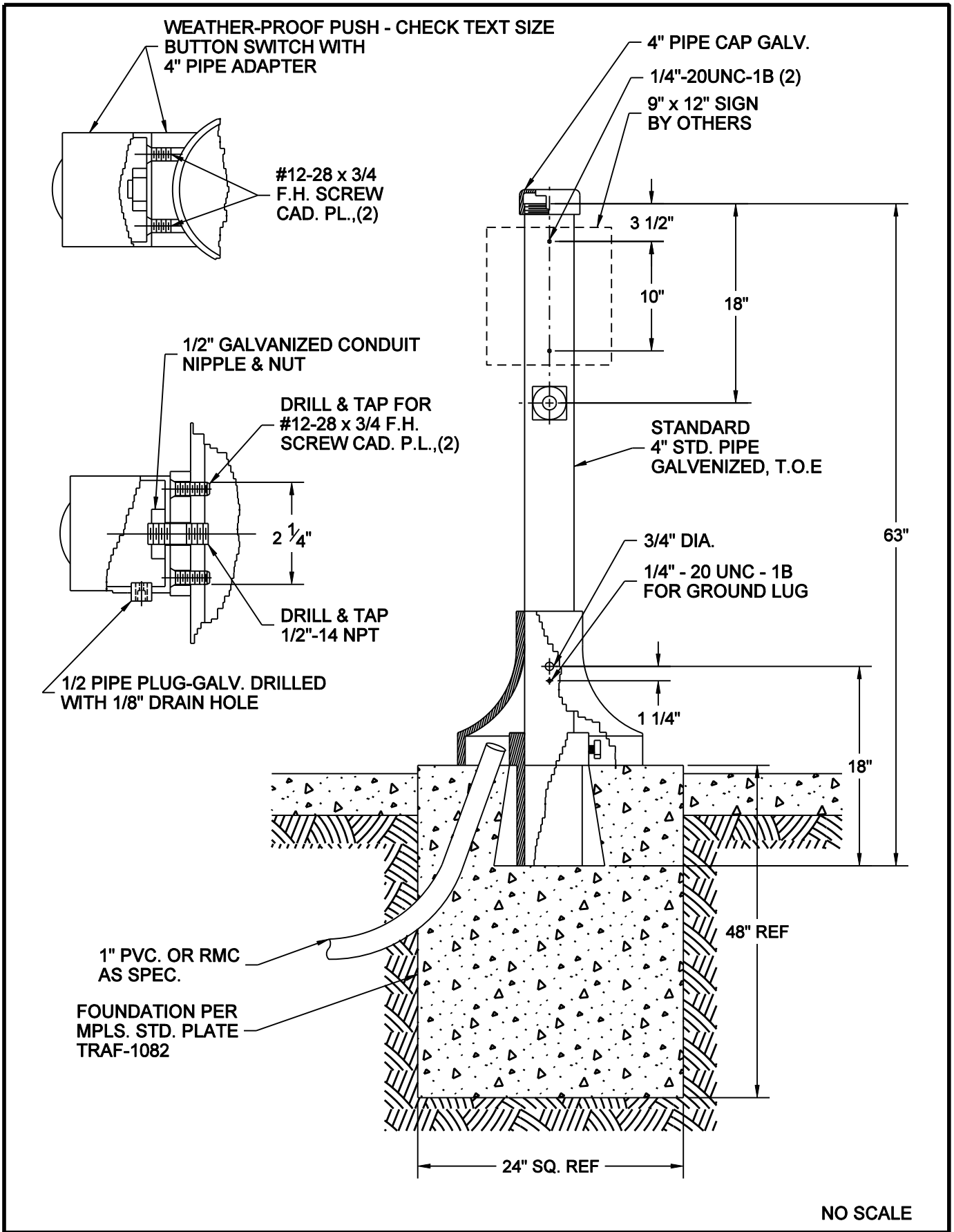

NO SCALE

MINNEAPOLIS DEPARTMENT OF PUBLIC WORKS		POLE - SIGNAL PEDESTAL PUSH BUTTON REFERENCE PLATE: TRAF-1082	STANDARD PLATE NO. TRAF-1259
DRAWN: LPK	DATE: 1/1/11		
APPROVED: DRP	DATE: 1/1/11		