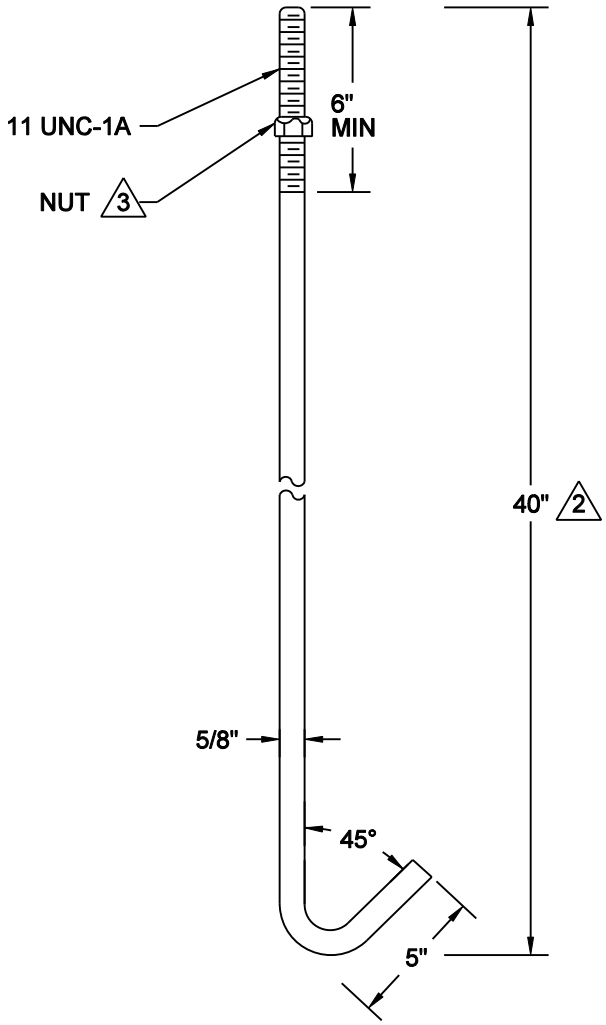


1. MATL-STEEL, ASTM, A36 (5/8" DIA x 45" LONG BEFORE BEND)

2. FINISH-HOT DIP GALVANIZE LENGTH INDICATED-NUTS SHALL RUN FREE AFTER PLATING

3. RODS TO BE SUPPLIED WITH GALV. HEAVY HEX NUTS, ASTM A-307 ASSEMBLED AFTER ROD PLATING

NO SCALE

| | | | |
|---|---|---|---|
| **MINNEAPOLIS** DEPARTMENT OF PUBLIC WORKS | | ANCHOR ROD - SIGNAL<br>1" X 40" PEDESTAL POLE | STANDARD PLATE NO. TRAF-1140 |
| DRAWN: LPK | DATE: 1/1/11 | | |
| APPROVED: DRP | DATE: 1/1/11 | | |