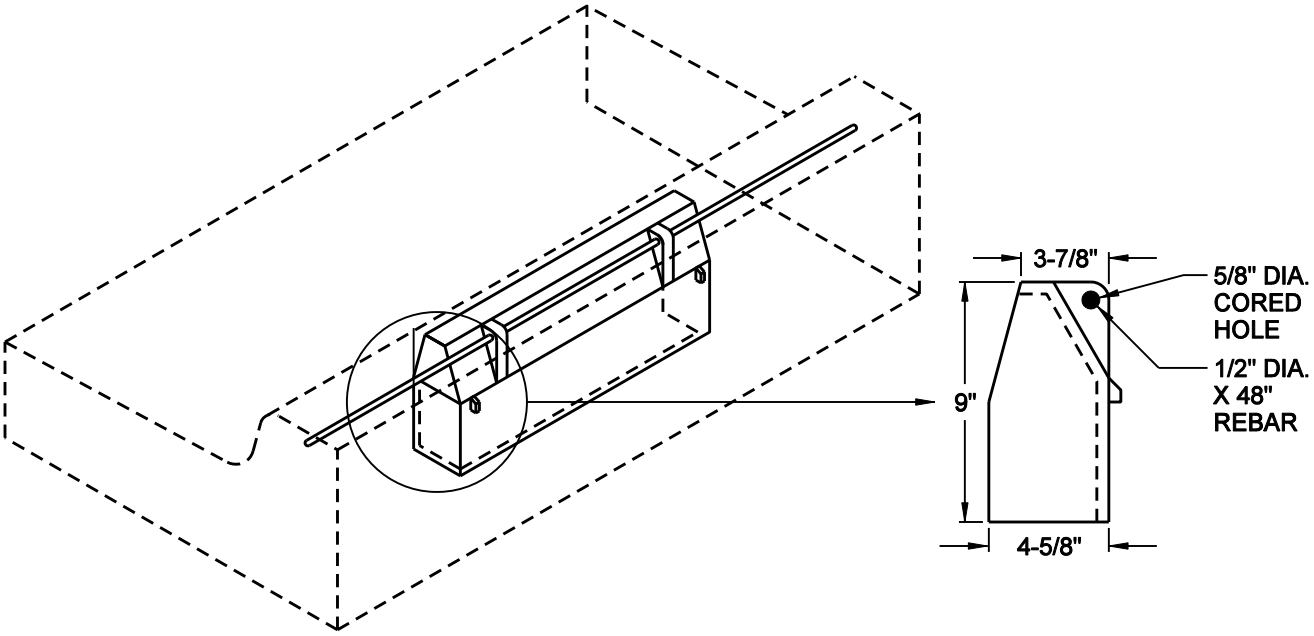

MINNEAPOLIS DEPARTMENT OF PUBLIC WORKS		REINFORCING AT CURB OUTLET	STANDARD PLATE NO. ROAD-1009
DRAWN: JFC	DATE: 9/10/07		
APPROVED: GAS	DATE: 5/19/08		