NOTES: 1. RING & COVER TO BE PRIMED W/ RED OXIDE PRIMER.

2. RING & COVER TO BE FINISH PAINTED W/ CITY APPROVED SIGNAL GREEN EXTERIOR ENAMEL.

3. WEIGHT OF RING = 96 LBS. WEIGHT OF COVER = 46 LBS

4. RAISED LETTERING, 7/8" TALL

5. 1/4" X 20 THREADED DRILLED & TAPPED HOLES FOR GROUNDING

6 BRAIDED STRAP
WILEY - WILEYBRAID24 #6 OR EQUIVALENT

7 GROUND LUG
BURNDY - KA4C OR EQUIVALENT

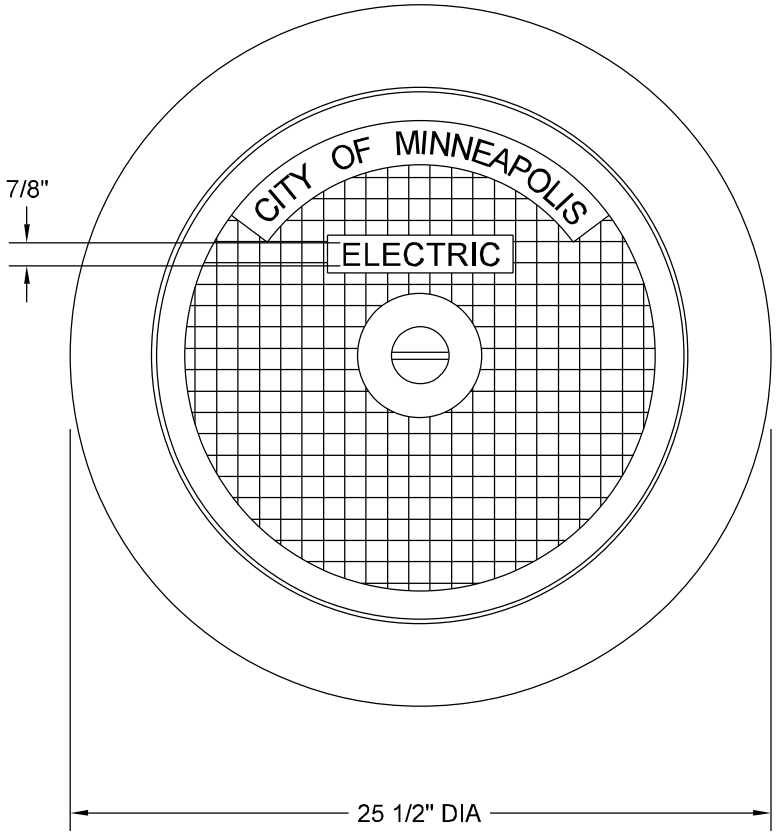

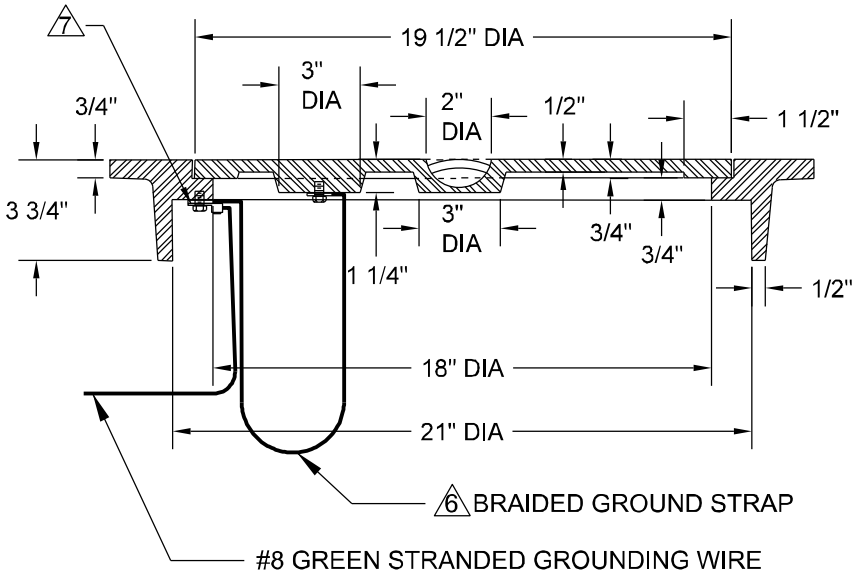

NO SCALE

Minneapolis Public Works	DRW: CLK	DATE: 10/4/16	HANDHOLE - SIGNAL/ST. LIGHT 18" DIA. X 30" - STEEL	STANDARD PLATE NO. TRAF-1715-R2
	APP: DRP	DATE: 10/4/16		