MATERIAL SPECIFICATIONS	
TAPERED TUBE	ASTM A595 GR A
CAST ANCHOR BASE	ASTM A27 65-35
LEAF COVERS	ASTM A48 CL30
PIPE	ASTM A501 or A53 GR B
STRUCTURE FINISH	HD GALV TO ASTM A123 & POWDER COAT
HARDWARE FINISH	HD GALV TO ASTM A153

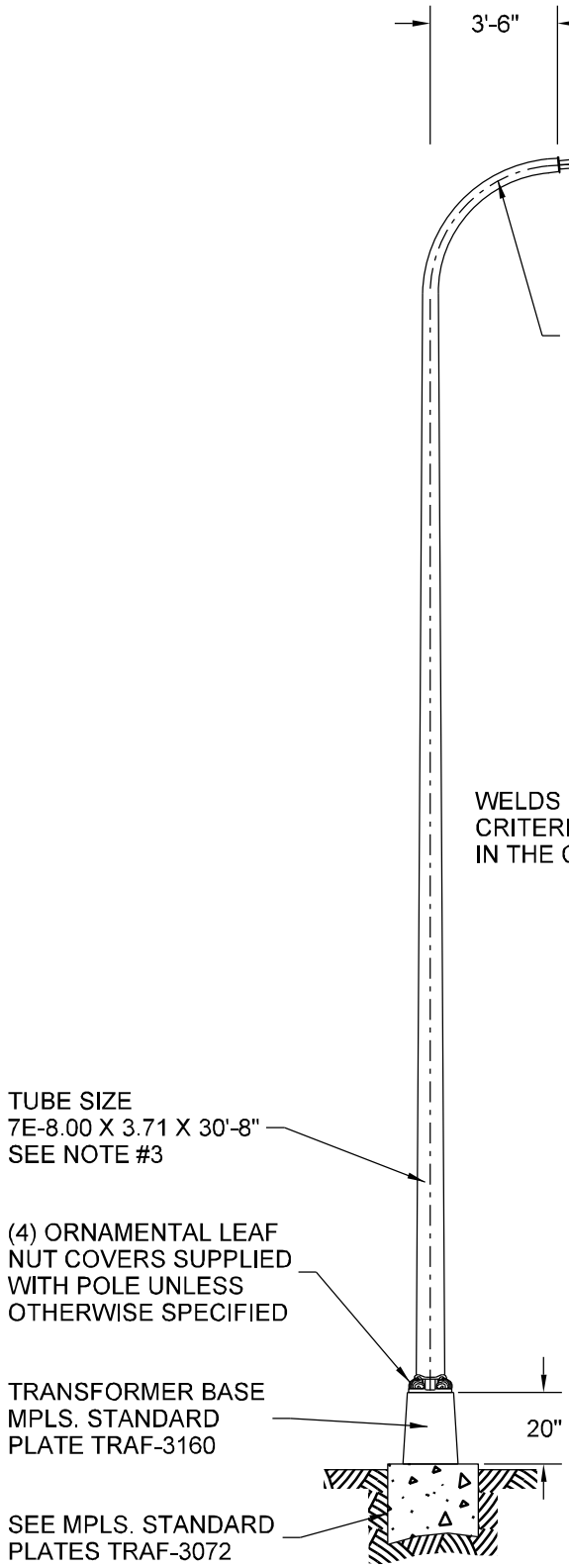

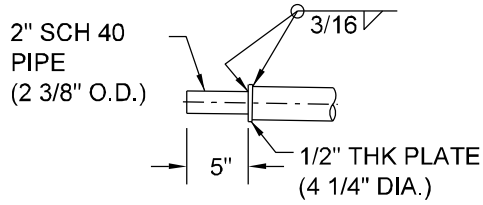

LUMINAIRE ARM END TENON DETAIL

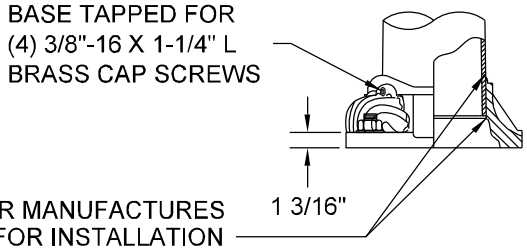

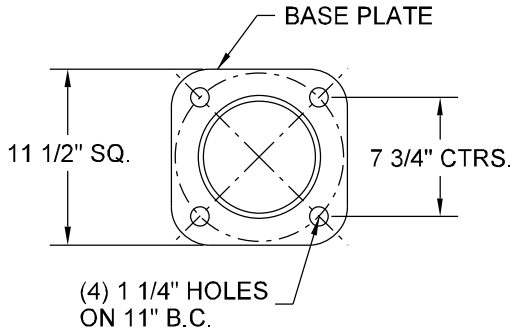

POLE BASE DETAIL

NOTES:

1. MATERIAL-HIGH STRENGTH, LOW ALLOY STEEL 50,000 PSI MIN. YIELD, (ASTM A572 OR EQ.) POLE BASE PLATE MATERIAL TO BE 36,000 PSI MIN. YIELD (ASTM A36).
2. FINISH-UPS BROWN
3. FINAL TUBE SIZE, FABRICATE FROM 7E-8.00 X 3.57 X 31'-8"& CUT TO FINAL LENGTH AFTER BENDING. (7 GA = 0.179" WALL THICKNESS) (E = ROUND TAPERED STEEL TUBE @ 0.14 in/ft TAPER.)

NO SCALE

Minneapolis Public Works	DRAWN: CLK	DATE: 4/7/16	STANDARD - ST. LIGHT 3M-30' GALVANIZED STEEL REFERENCE PLATES: TRAF-3072, TRAF-3160	STANDARD PLATE NO. TRAF-3206-R4
	APP: DRP	DATE: 4/7/16		