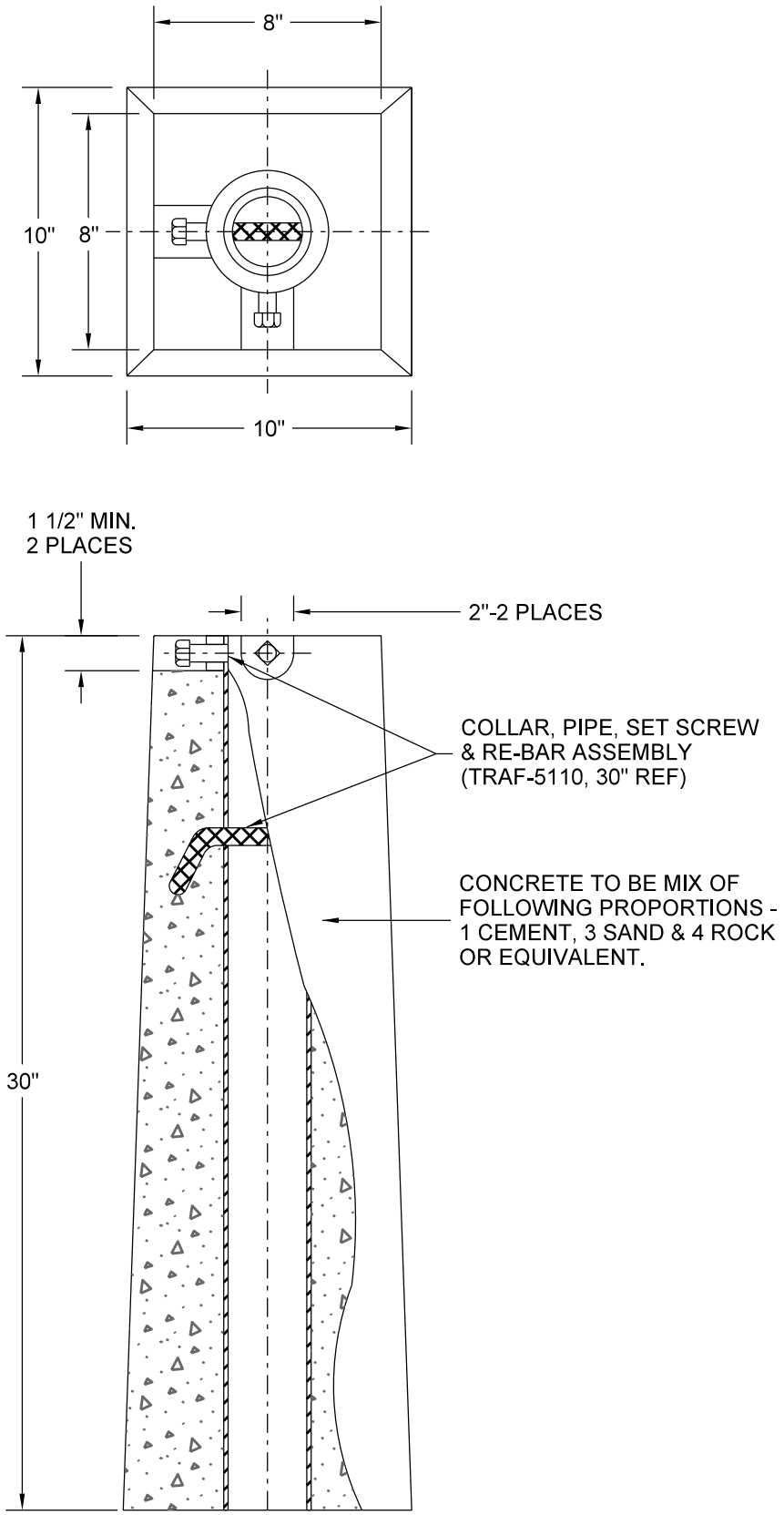

NO SCALE

Minneapolis City of Lakes	**MINNEAPOLIS** DEPARTMENT OF PUBLIC WORKS	FOUNDATION - SIGN PRECAST 30"	STANDARD PLATE NO. TRAF-5070-R1
	DRAWN: CLK / DATE: 4/30/14		
	APPROVED: DRP / DATE: 4/30/14		