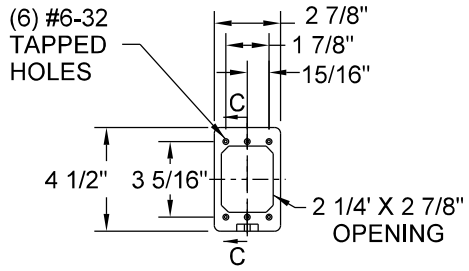

OUTLET FRAME DETAIL

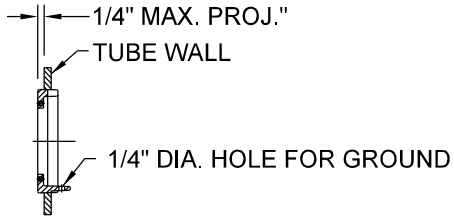

SECTION
C-C

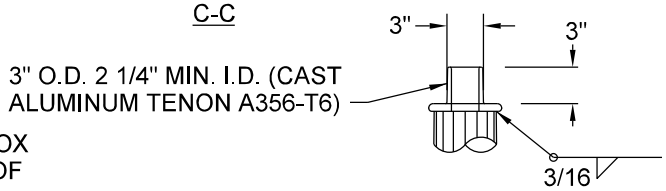

TENON DETAIL

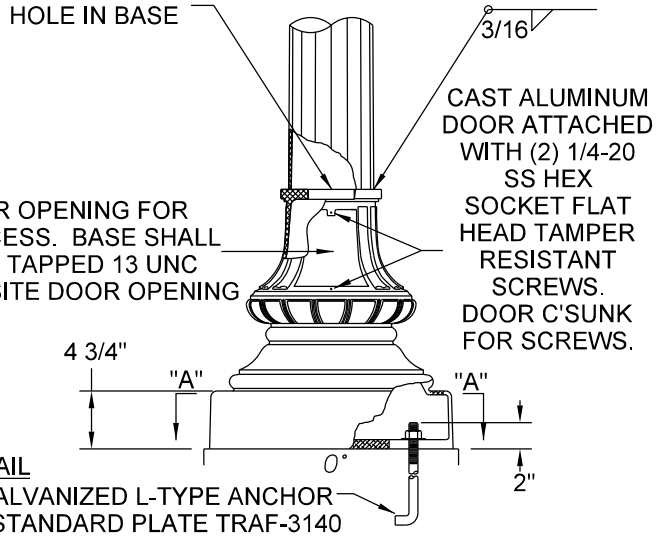

ANCHORAGE DETAIL

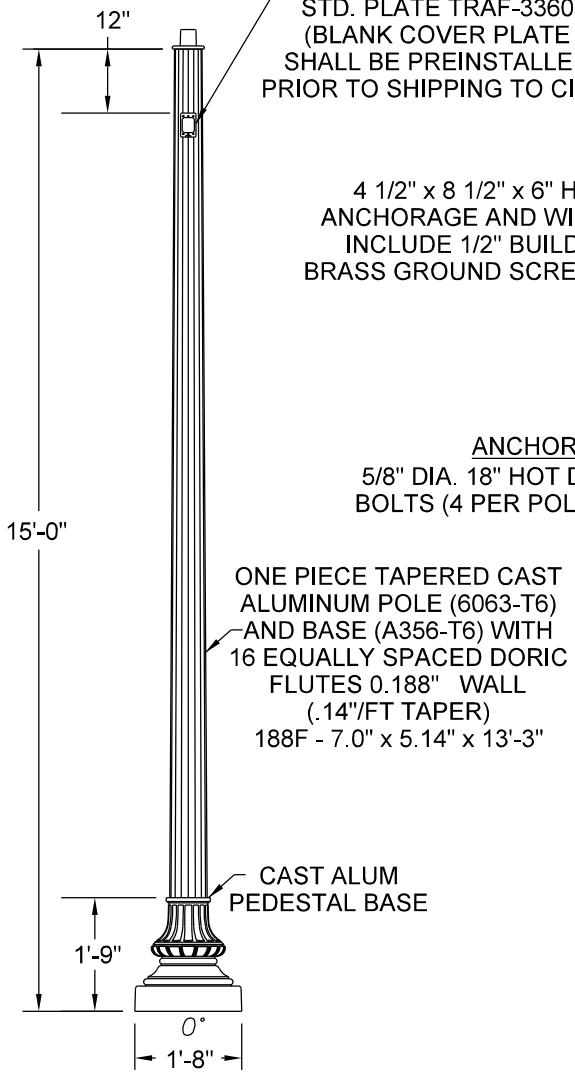

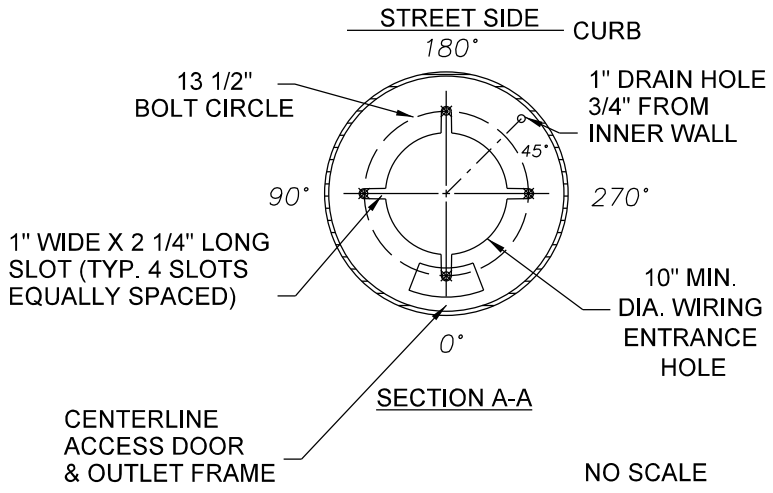

SECTION A-A

NO SCALE

NOTES:
1. FOR FOUNDATION SEE MPLS STANDARD PLATE TRAF-3060
2. MATERIAL- CAST ALUMINUM SEE SPECIAL PROVISIONS
3. POLE & BASE FINISH SEE SPECIAL PROVISIONS

MINNEAPOLIS DEPARTMENT OF PUBLIC WORKS		STANDARD - ST. LIGHT M-15' ALUMINUM ANODIZED W/RECEPTACLE REFERENCE PLATES: TRAF-3060, TRAF-3140, TRAF-3360	STANDARD PLATE NO. TRAF-3279-R2
DRAWN: CLK	DATE: 3/13/14		
APPROVED: DRP	DATE: 3/13/14		