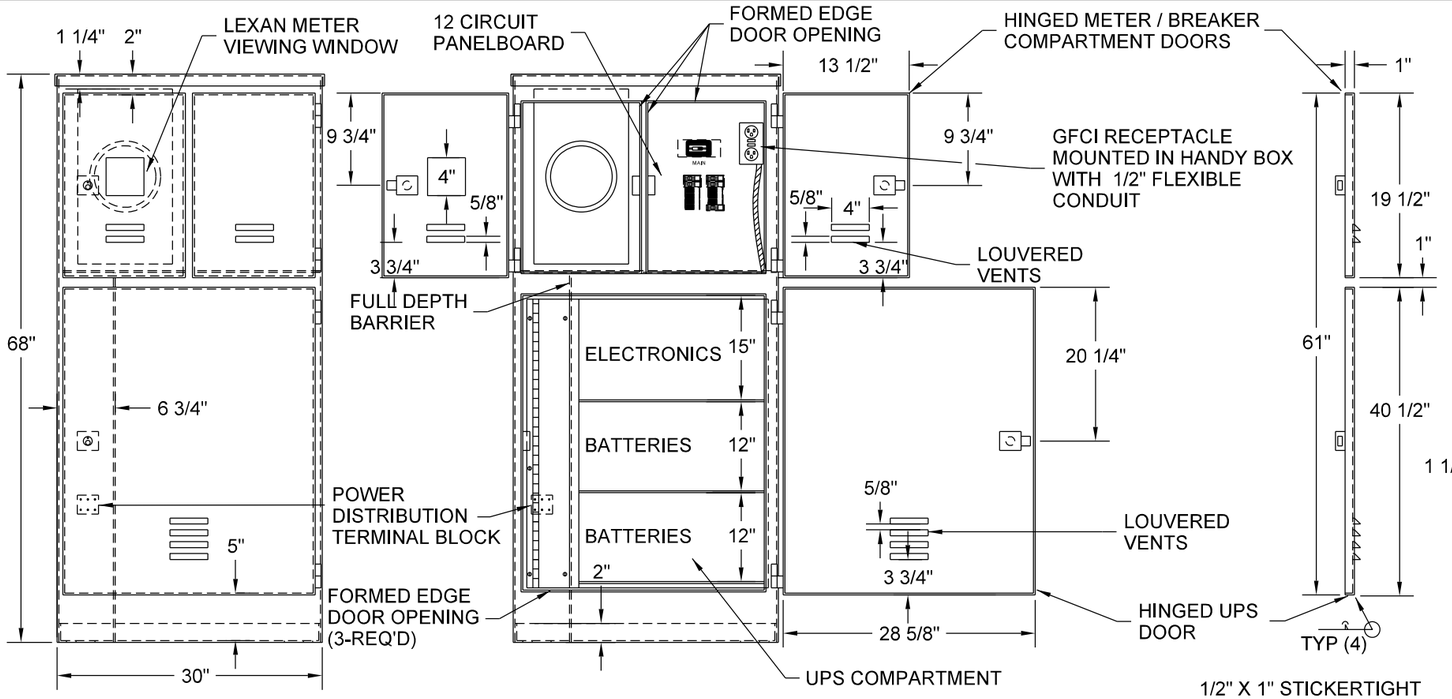

FRONT ELEVATION

FRONT ELEVATION

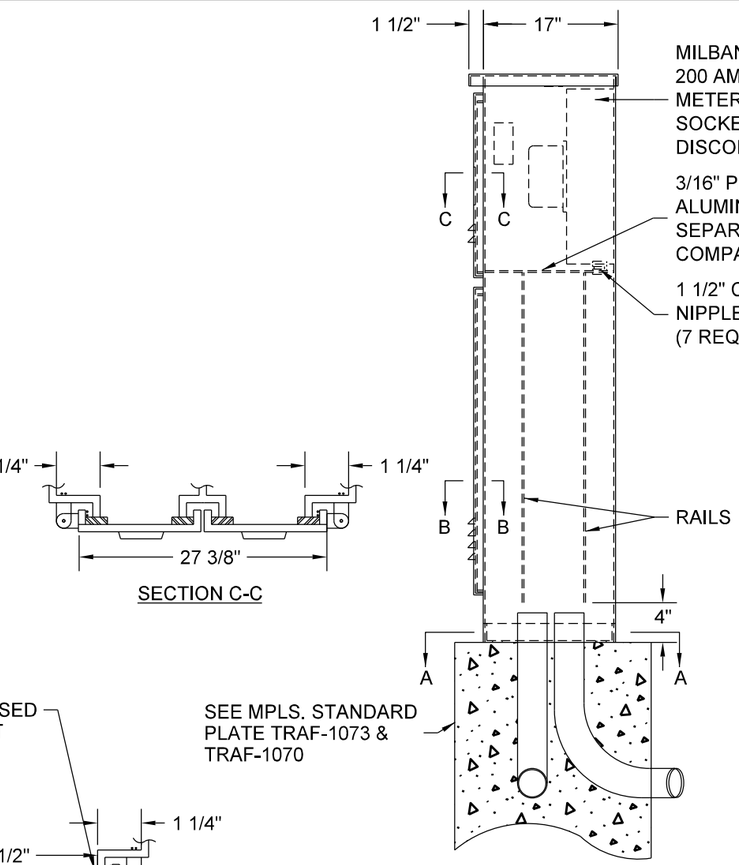

RIGHT SIDE ELEVATION

SECTION C-C

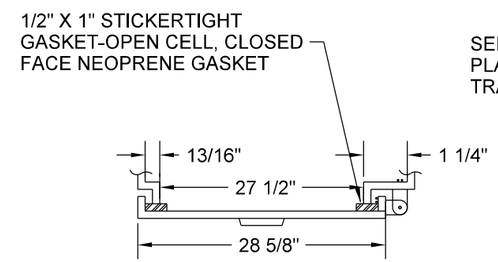

SECTION B-B

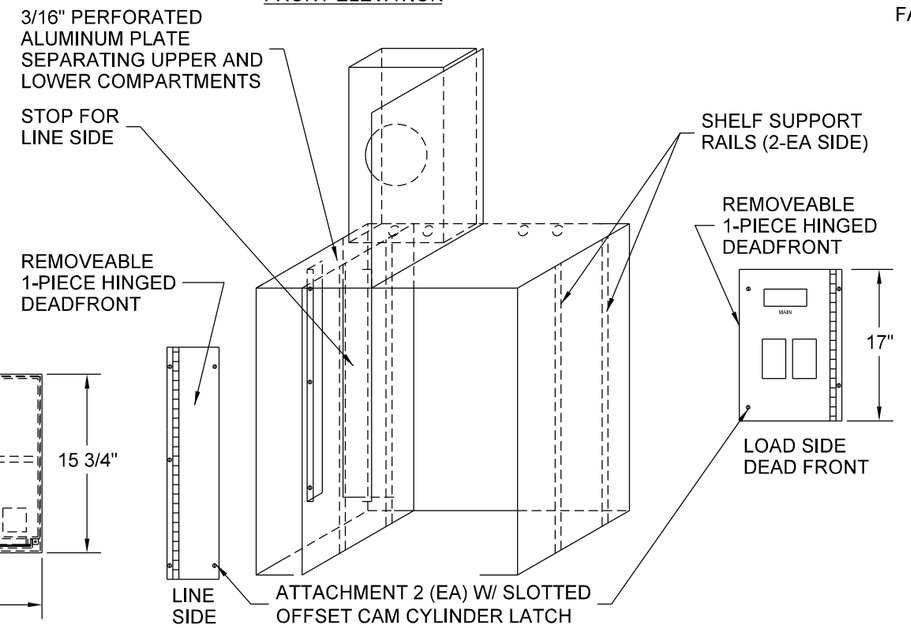

BARRIER CONFIGURATION

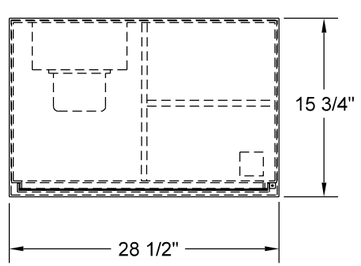

TOP VIEW

NO SCALE

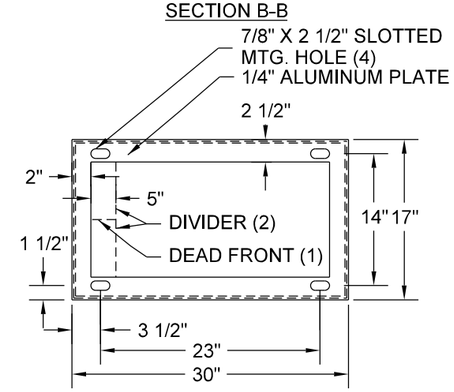

BOTTOM SECTION A-A

(1) DEAD FRONT TERMINATE 5" ABOVE BOTTOM

(2) DIVIDER FULL LENGTH TO BOTTOM

1. ALL HINGES SHALL BE LIFTOFF SOUTHCO MODEL 96-10-500-50.
2. DOORS SHALL BE PROVIDED WITH NEOPRENE GASKET TO FORM A COMPLETE SEAL WITH THE ENCLOSURE.
3. FEED POINT PEDESTAL CABINET SHALL BE NEMA 3R ENCLOSURE, U.L. LISTED AND LABELED "SUITABLE FOR USED AS SERVICE ENTRANCE EQUIPMENT."
4. FEED POINT PEDESTAL CABINET MATERIAL SHALL BE 3/16" 5052-O ALUMINUM.
5. UTILITY APPROVED METER SOCKET WITH DISCONNECT.
6. THE METER COMPARTMENT, CIRCUIT BREAKER COMPARTMENT,AND UPS COMPARTMENT DOORS SHALL BE SECURED WITH A STANDARD CITY OF MPLS. LOCK AND BE EQUIPPED WITH A SWING DOWN PLATE WITH TWO KEYS.
7. LOCKS TO BE FURNISHED & INSTALLED BY VENDOR.
8. ALL ATTACHMENTS TO CABINET SHALL BE WELDED OR USE STAINLESS STEEL STANDOFFS.
9. LOUVERS SHALL BE BACKED WITH PERFORATED (1/8" HOLE) STAINLESS STEEL SHEET.
10. WINDOW SHALL BE CENTERED IN METER COMPARTMENT ON METER SOCKET.
11. VENTILATION HOLES (1/8") SHALL BE PROVIDED IN CABINET FRONT AT 1/2" CENTERS AT ROOF CAP.
12. EQUIPMENT SHALL BE ARRANGED WITHIN CABINET AS APPROXIMATELY SHOWN.
13. PANELBOARD DEAD FRONT SHALL BE PUNCHED TO MATCH FULL CAPACITY OF BREAKER PANEL.
14. CABINET SHALL HAVE THREE SLIDEOUT REMOVABLE SHELVES.

MINNEAPOLIS DEPARTMENT OF PUBLIC WORKS		CABINET - SIGNAL/UPS SERVICE - NON-CBD REFERENCE PLATE: TRAF-1073, TRAF-1574, TRAF -1070	STANDARD PLATE NO. TRAF-1472-R2
DRAWN: CLK	DATE: 3/26/14		
APPROVED: DRP	DATE: 3/26/14		