ENCLOSURE FEATURES

- OPEN BOTTOM
- STRAIGHT WALL

COVER FEATURES

- HIGH DENSITY POLYMER CONCRETE (HDPC).
- LOGO EMBOSSED WITH 2" HEIGHT LETTER AS SHOWN.
- SKID RESISTANT SURFACE (0.5 COF SKID).
- NOT SECURED WITH BOLTS (NO BOLT HOLES IN COVER).

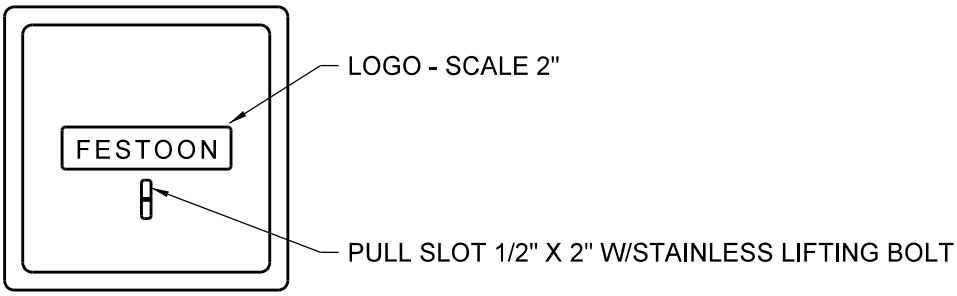

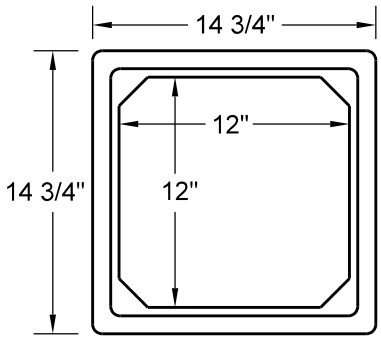

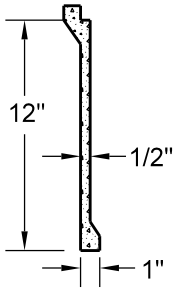

SECTION A-A

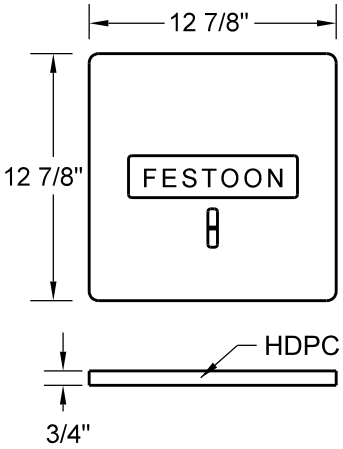

COVER

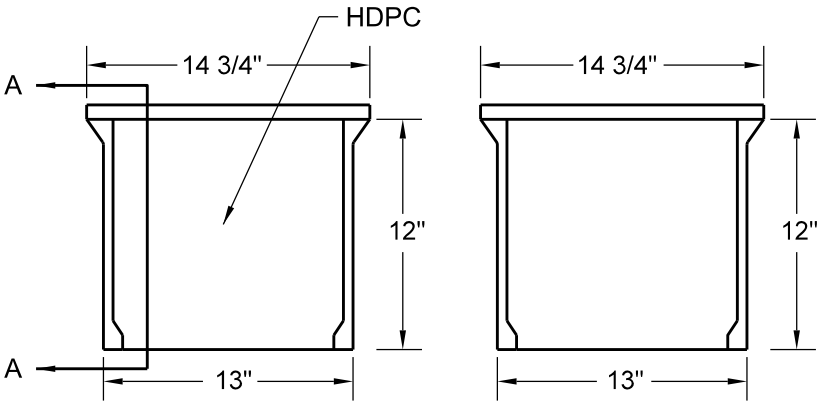

JUNCTION BOX 15" X 15" X 13"

NOTES:
1. COVER AND BOX SHALL MEET TIER 15 RATING (ANSI/SCTE 77-2007).
2. COLOR - CEMENT GRAY.
3. ALL DIMENSION ARE NOMINAL.
4. SEE MPLS STANDARD PLATE TRAF-3725 FOR INSTALLATION DETAILS.

NO SCALE

MINNEAPOLIS DEPARTMENT OF PUBLIC WORKS		HANDHOLE - FESTOON 15" X 15" X 13" - HDPC REFERENCE PLATES: TRAF-3725, TRAF-3730	STANDARD PLATE NO. TRAF-3720
DRAWN: BKK	DATE: 02-12-13		
APPROVED: DRP	DATE: 02-12-13		