Health o meter®
Professional

600KL
Physician Electronic Scale
With Integral Digital Height Rod

600 lb x 0.2 lb
272 kg x 0.1 kg

ISO13485:2003
CERTIFIED

USER INSTRUCTIONS

MET® c US

Patent Pending

Rev. 20110518

Health o meter®
Professional

600KL
PROFESSIONAL DIGITAL PHYSICIANS SCALE WITH INTEGRAL DIGITAL HEIGHT ROD

USER INSTRUCTIONS

Thank you for your purchase of this Health o meter® Professional scale.
Please read this manual carefully and keep it for easy reference or training.

TABLE OF CONTENTS

CAUTION AND WARNING 2
SYMBOLS AND SPECIFICATIONS FOR THIS SCALE.....2
CONNECTIVITY / CERTIFICATIONS / DISPOSAL 3
ASSEMBLY INSTRUCTIONS 3
SET UP.....5
QUICK START OPERATING INSTRUCTIONS.....5
MAINTENANCE AND CLEANING.....6
CALIBRATION 7
TROUBLESHOOTING 7
DETAILED VIEWS.....9
PARTS LIST FOR MAINTENANCE 10
WARRANTY.....12

CAUTION AND WARNING

To prevent injury and damage to your scale, please follow these instructions very carefully:

- Do not transport the scale while platform is loaded. Be sure the scale is tilted enough to assure it is rolling properly on its wheels when it is moved for cleaning or transported from one area to another.
- For accurate weighing the scale must be placed on a flat, stable surface.
- For accurate weighing, verify proper operation according to the procedure described in this manual before each use.
- Do not use in the presence of flammable materials.
- Operating at other voltages and frequencies than specified could damage the equipment.
- If the "LOW BAT" indicator activates, for accurate weighing replace the batteries or connect the scale to an AC power source, using the power adapter, as soon as possible, depending on use—see Connectivity section.
- Only authorized, qualified personnel shall service the scale.

This equipment has been tested and found to comply with the EMC limits for the Medical Device Directive 93/42/EEC (EN 55011 Class A and EN 60601-1-2). These limits are designed to provide reasonable protection against harmful interference in a typical medical installation. The equipment generates, uses and may radiate radio frequency energy and, if not installed and used in accordance with these instructions, may cause harmful interference to other devices in the vicinity. However, there is no guarantee that interference will not occur in a particular installation. If this equipment does cause harmful interference with other devices, which can be determined by turning the equipment off and on, the user is encouraged to try to eliminate the interference by one or more of the following measures:

- Reorient or relocate the receiving device.
- Increase the separation between the equipment.
- Connect the equipment into an outlet on a circuit different from that to which the other device(s) is connected.
- Consult Customer Service or a field service technician for help.

DEFINITION OF SYMBOLS

Attention, Consult Accompanying Documents

Temperature range
(50°F to 104°F / 10°C to 40°C)

AC to DC power supply
(6V DC, 500mA)

Type BF Applied Parts

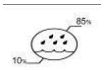

Humidity range
(10% - 85% RH)

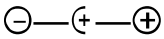
DC Connector Polarity

AC to DC power supply

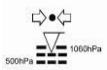

Atmospheric pressure range
(500hPa – 1060hPa)

Keep dry

Fragile

SCALE SPECIFICATIONS

Health o meter® Professional Digital Physician Scale Model 600KL uses sophisticated microprocessor technology. This precision instrument is designed to provide accurate, reliable and repeatable weight measurements and features that make the weighing process simple, fast and convenient. The scale is set up to determine the weight of a stationary patient. The weight can be displayed in pounds or in kilograms. The 600KL features a swivel display which allows for viewing from either side of the scale plus wheels for easy mobility. The scale can be operated with a power adaptor or by 6-C cell batteries (not included), depending on use.

Capacity and Resolution:	600 lb x 0.2 lb (272 kg x 0.1 kg)
Power Requirements:	120-240V AC – 6V DC 50-60Hz, Adapter Model ADPT50 (INCLUDED), or 6 C-cell 1.5V batteries (not included).
Environmental:	Operating Temperature: 50°F to 104°F / 10°C to 40° C Storage Temperature: 30°F to 125°F (-1°C to +52°C) Maximum Humidity: 85% RH in use or in storage
Platform Dimensions:	14-¾" x 14-11/16" x 2 ¼" / 37.5cm x 37.3cm x 5.7cm
Assembled Dimensions:	14-¾" x 22-11/16" x 54-¼" (37.5cm x 57.6cm x 137.8cm)

STORAGE SPECIFICATIONS

Storage Temperatures:	30°F to 125°F (-1°C to +52°C)
Humidity:	10% - 85% RH
Atmospheric Pressure:	500hPa – 1060hPa

***WARNING:**

For use with AC Adaptor Model ADPT50 or with 6 C-cell batteries. Complies with C22.2 No. 601.1-M90 and UL Std No. 60601-1. Type BF applied parts. Internally powered.

Equipment is not suitable for use in the presence of flammable anesthetic mixture with air nor with oxygen or nitrous oxide.

CONNECTIVITY / CERTIFICATIONS

SCALE CONNECTIVITY INF ORMATION:

This scale is designed to connect to other devices via a USB port, to allow acquisition of weight, height and BMI from the scale, to help close a source of potential medical errors caused by incorrectly copying and then recording a weight taken. This scale is EMR-EHR compatible. For more information regarding how to connect this scale to your computer, a monitor or other device please contact Customer Service.

CERTIFICATION DESCRIPTIONS:

MET® c us	This product meets the requirements of: 1. UL60601-1 First Edition: Safety for Medical Electrical Equipment 2. CSA C22.2 No. 601-1 M90: Medical Electrical Equipment
ISO13485:2003 CERTIFIED	Pelstar, LLC has been officially certified as a manufacture of Health o meter® Professional medical devices to be in compliance with stringent legal requirements. The Pelstar, LLC quality assurance system covers the development, production, sales and service of medical scales and measuring systems.

SCALE DISPOSAL:

Do not dispose of this device in domestic waste. This Health o meter® Professional scale must be disposed of properly as electronic waste. Follow the national, regional or local regulations which apply to you for disposal. For scale assistance or telephone support, please call Health o meter® Professional Customer Service (available on normal business days) at (+1) 800-815-6615 or (+1) 708-377-0600.

ASSEMBLY INSTRUCTIONS

1. 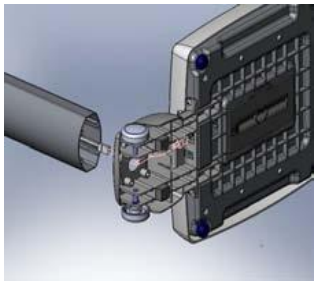 Feed load cell wire through pillar base.	**2.** 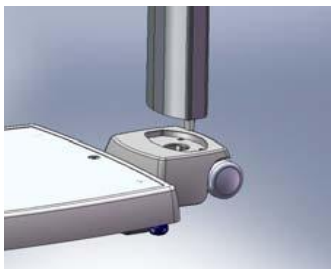 Insert pillar into pillar base.

ASSEMBLY INSTRUCTIONS – CONTINUED

3.

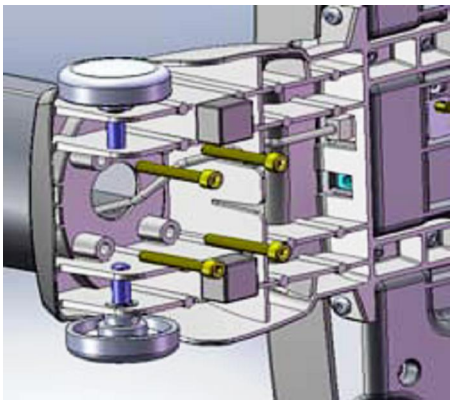

Screw in the 4 hex screws with a 5mm hex driver.

4.

Plug load cell cable into the load cell plug in base of scale (see diagram 1a).

The base of the scale has been designed to provide wire management for the load cell cable. Route the load cell cable as shown in diagram 1b.

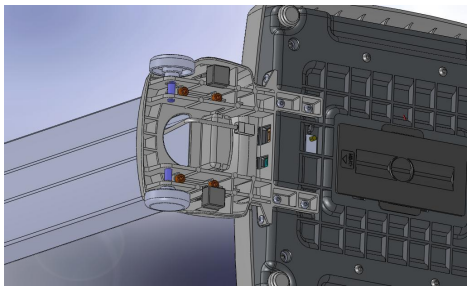

Diagram 1a

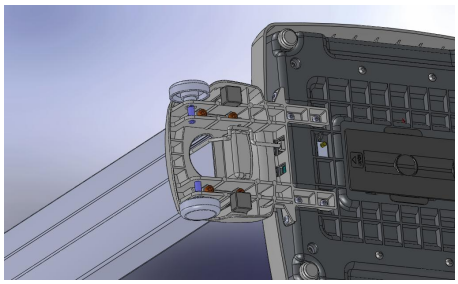

Diagram 1b

5. Set the base/pillar assembly upright.

6.

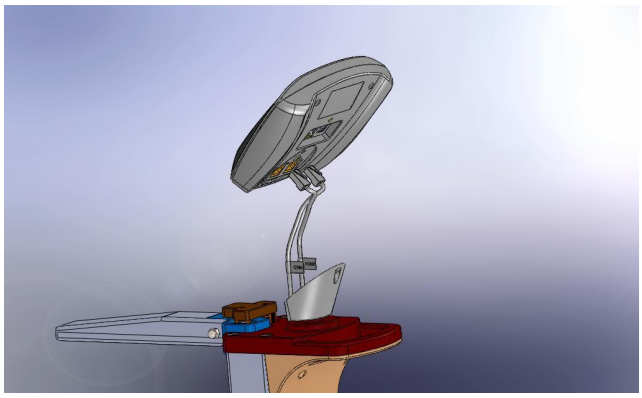

Plug the cable labeled “SCALE” into SCALE jack in display module. Plug the cable labeled “COM” into the COM jack in the display module.

7.

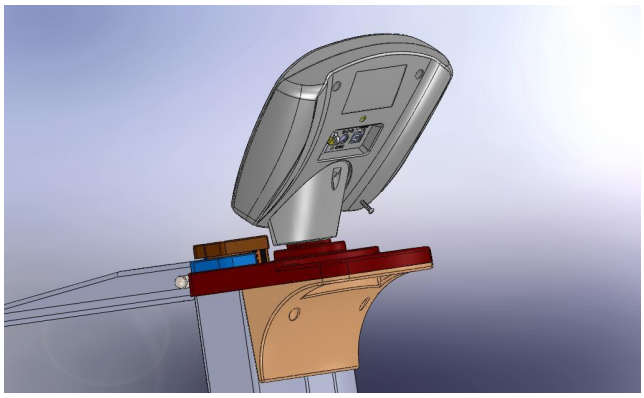

Place the display module on top of the pillar and use the Phillips screw to fasten the module to the pillar

SET UP

Remove the protective film from the display window on the display head.
Make certain that the scale base is on a stable, flat surface and that the sides of the base are clear of any obstacles.
Utilizing the leveling bubble located at the top of the scale platform, level the scale by adjusting the leveling feet at each corner of the base.

PREPARING THE SCALE FOR USE

1. Place the batteries in the battery holder (see "Replacing Batteries" information below).
2. For AC operation – plug the adapter into the base of the scale and into the power source, or use the DC IN plug on the back of the display module.
3. Turn the scale on by pressing the ON/OFF button. The entire LCD display will light up, followed by the version number and then 0.0.

REPLACING BATTERIES

1. Place the scale on its side. The battery holder is located in the center of the bottom of the base.
2. Slide the battery cover in the direction of the "open" arrow.
3. Place the batteries into the battery holder. We recommend EVEREADY Energizer® e2™ batteries.

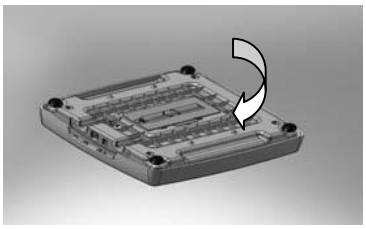

4. Replace the battery cover

Warning: If the scale will not be used for some time, remove all batteries to avoid a safety hazard. Disposal of batteries should be done according to the national, regional or local regulations which apply to you for disposal of batteries.

QUICK START OPERATING INSTRUCTIONS

Weighing a Patient

1.Press the **ON/OFF** button to turn the scale on.
2.Wait until '0.0' and 'Zero' appear on the left side of the display.
3.Ask the patient to step on the scale. The scale will display the patient's weight. Note: the weight will change until the patient weight is stable. Once the patient is standing still, the scale will beep three times and the word "Lock" will appear on the display. The weight may be held on the display, so the scale operator can move the patient, by pressing the **HOLD/RELEASE** button. To release, press the **HOLD/RELEASE** button again.

To Obtain BMI

1. Ask the patient to step on the scale platform and obtain the patient's weight. Press the **WEIGHT/HEIGHT/BMI** button once. The scale will now display the position of the height rod. Adjust the height rod so that the headpiece gently rests on the patient's head. Press the **WEIGHT/HEIGHT/BMI** button again. The display will show the patient's BMI.
2. Press the **SEND** button to lock the height and BMI display and to send the weight, height and BMI information to the scale USB port.
3. Press the **RESET** button to revert back to weight display and to unlock the height and BMI display.

Using the Scale for Height Only Measurement

1. Press the **ON/OFF** button to turn the scale on.
2. Wait until '0.0' and 'Zero' appear on the left side of the display.
3. Press the **WEIGHT/HEIGHT/BMI** button once. The scale will display the position of the height rod.
4. Ask the patient to step on the scale platform. Adjust the height rod so that the headpiece gently rests on the patient's head. Read the height.
5. Press the **RESET** button to revert back to weight display.

NOTE: The scale will always default to the settings and units last used.

QUICK START OPERATING INSTRUCTIONS - CONTINUED

Using the Keypad

KEY	FUNCTION
ON / OFF	Turns scale ON and OFF.
ZERO	Zeros the scale prior to weighing.
HOLD/RELEASE	Holds the value of the weighed object on the display until the button is pressed again to clear the value.
UNITS	Toggles between kilograms or pounds.
▲	Scrolling method for entering weight when in Calibration mode.
WEIGHT/HEIGHT/ BMI	Toggles the display between the weight reading, height reading and corresponding Body Mass Index (BMI) reading.
▼	Scrolling method for entering weight when in Calibration mode.
RESET	Functions to unlock height and BMI display.
SEND	Used to "lock" the height and BMI display and to send weight, height and BMI data via the USB port.

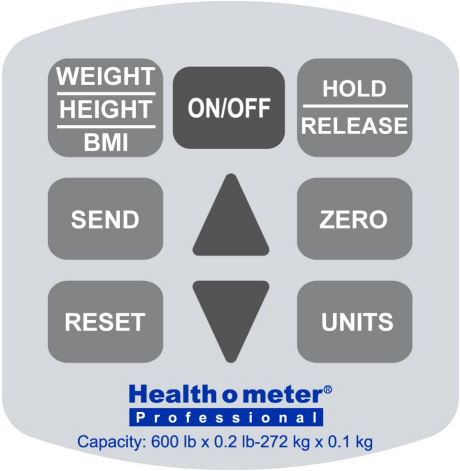

MAINTENANCE AND CLEANING

GENERAL

This section provides instructions for maintenance, cleaning, calibration, troubleshooting and operator replaceable parts for these scales. Maintenance operations other than those described in this section should be performed by qualified service personnel.

1. This scale contains electronic parts. Use it carefully. Do not drop, kick or jump on it.
2. Do not store near chemicals, heaters or radiators.
3. Do not store any of these scales on their side.

Before first use and after periods of non-use, check the scale for proper operation. If the scale does not operate correctly, refer to qualified service personnel.

1. Check overall appearance of the total scale for any obvious damage, abuse, etc.
2. Inspect condition of AC adapter cord and prongs, replace if needed.
3. Clean all external surfaces with a clean damp cloth or tissue.
4. Use a domestic cleaning agent or commercially available disinfectant.

CLEANING

Proper care and cleaning is essential to ensure a long life of accurate and effective operation. The following cleaning agents are compatible with the scale.

Disconnect the scale from the power source, if plugged in

1. **Mild Soap and Water Solution**. Wipe the outside of the scale with a soft cloth slightly dampened with a mild detergent solution. Dry with a clean soft cloth.
2. **Sani-Cloth or CaviWipes**. Wipe the surface of the scale. Allow the surface to dry a minimum of 10 minutes before using scale.
3. **70 Percent Isopropyl Alcohol**. Wipe the surface of the scale with a clean cloth slightly dampened with 70 percent isopropyl alcohol.
4. **10 Percent Chlorine Bleach Solution**. Wipe the scale surface with a soft cloth slightly dampened with a 10 percent chlorine bleach solution. Rinse with a cloth slightly dampened with water. Allow surface to dry a minimum of 10 minutes before using scale.
5. Never place the any part of these scales in water. Do not spray any of them with liquid.

These scales are extremely sensitive weighing devices. Items such as clothing or towels placed or dropped on the scale may cause a scale to activate. In order to prevent battery depletion, do not store or leave anything on the scale.

CALIBRATION

This scale is factory calibrated and does not require calibration prior to use.

The calibration procedure may be performed using a known / certified weight in either pounds or kilograms. The default is in pounds, but calibration can be done in kilograms. The following instructions assume the scale is set to pounds. If you prefer to calibrate in kilograms, please call Customer Service at 800-815-6615.

Note: Calibration weight must be no less than 60 lb (27kg) and no more than 300 lb (150 kg).

ACTION	DISPLAY SHOWS
Turn the scale on. While "START" is displayed (for 3 seconds); Press **ZERO - UNITS - UNITS - ZERO**	"CAL" will appear on the LCD
Press **SEND**	"Load/300.0 lb"
Press **SEND** to calibrate with 300 lb. If calibrating with a lesser weight, press **WEIGHT/HEIGHT/BMI** to change the weight and then the arrows to change the flashing digit, **WEIGHT/HEIGHT/BMI** to move to the next digit, until you reach the required weight (no less than 60 lb and no more than 300 lb)	"CLEAR"
Clear the platform and press **SEND**	Zero Calibration "----------"
Wait without touching or shaking the scale until the zero calibration process is finished	Weight calibration "Put XXX.X"
Load the platform with the required weight and press **SEND**	"----------"
Wait without touching or shaking the scale until calibration process is finished	"DONE"/"CLEAR"
Remove weight from the platform	Scale will reboot. "StArt" will appear followed by the software version and "0.0"

TROUBLESHOOTING

Refer to the following instructions to check and correct any failure before contacting Customer Service.

SYMPTOM	POSSIBLE CAUSE	CORRECTIVE ACTION
Scale does not turn on	1. Dead Battery 2. Faulty electrical outlet 3. Bad Power Supply (Check LED light at back of display module to determine if adapter cord is working)	1. Replace batteries 2. Use a different outlet 3. Replace adapter
Questionable weight or the scale does not zero	1. External object interfering with the scale 2. The display did not show '0.0' before weighing 3. Scale is not placed on a level floor 4. Scale is out of calibration	1. Remove interfering object from the scale 2. Ask the patient to get off the scale, zero the scale and begin weighing process again 3. Place the scale on a level floor and begin weighing process again 4. Check weight with known weight value
The display shows "OVER"	The load on the scale exceeds the capacity (272 kg)	Remove the excess weight and use the scale according to its limits
The display shows "LO Bat" message	The batteries are low.	Replace batteries according to instructions
Height display shows "-----".	Height display will show bars when scale is first turned on.	Move height rod at least 4 inches for display to show height reading.

TROUBLESHOOTING (CONTINUED)

ERROR LIST

ERROR NO.	DEFINITION	CHECK/REPLACE
Err 1	Mathematical mistake; division by zero. Cannot calculate calibration factor	Will show when trying to calibrate with no calibration weight
Err 2	Weight loaded too low. Cannot calibrate	While in calibration procedure add more weight in load mode
Err 3	Unstable weight. Cannot calibrate	Check the load cells mechanical surroundings and see nothing touches them and the cables are well connected
Err 5	Calibration disabled	Toggle the calibration switch to enable
Err 6	High saturation state (high A/D)	The load cell is not connected correctly. Check the connection, cables, and mechanical connection. If the problem persists, replace the set of load cells
Err 7	Low saturation state (low A/D)	See Err 6

DETAILED VIEWS

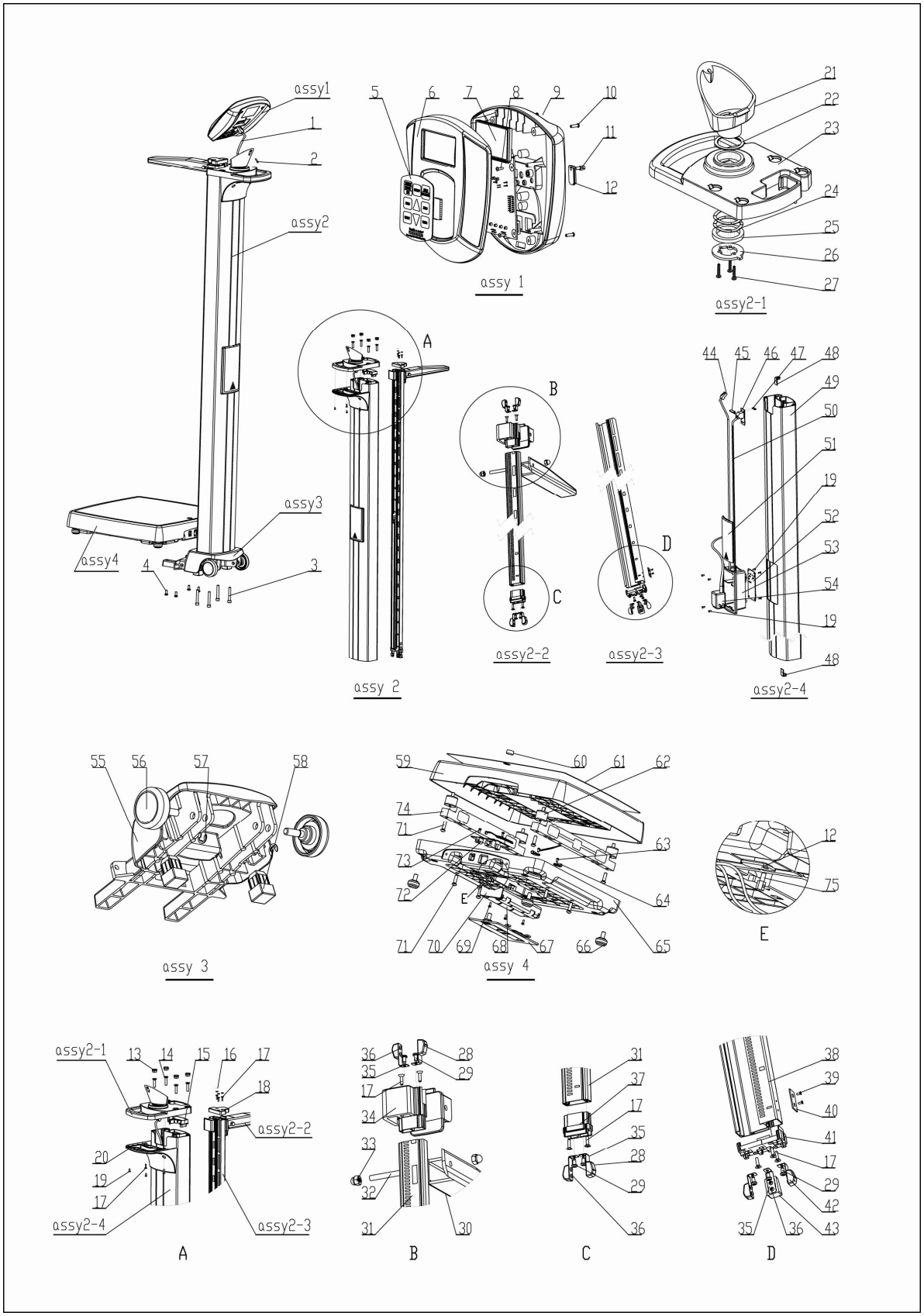

SCALE PARTS FOR MAINTENANCE

Key#	Part#	Description	Qty.
Assy 1		Display Head Assembly	1
Assy 2		Pillar and Height Rod Assembly	1
Assy 2-1		Pillar Top Cover Assembly	1
Assy 2-2		Inner Height Rod Assembly	1
Assy 2-3		Outer Height Rod Assembly	1
Assy 2-4		Pillar Assembly	1
Assy 3		Pillar Base Assembly	1
Assy 4		Scale Assembly	1
1	P380610046	Load Beam Cable	1
2	P370110312	M3x12 Round Head Screw	1
3	P370340641	M6x40 Hex Socket Screw	4
4	P370340513	M5x12 Round Head Hexagon Screw	6
5	P360616350	600KL Keypad	1
6	P380610051+P380610053	Display Head-Front with LCD Window	1
7	P215610111	PCB	1
8	P372111310	3x10 Round Head Self-Tapping Screw	4
9	P380610052	Display Head - Back	1
10	P370110310	M3x10 Round Head Screw	4
11	P375010511	Hex Sealing Screw	1
12	P380610040	Access Door	2
13	P380610090	Swivel Base Plug	4
14	P370230625	M6x25 Flat Head Screw	4
15	P380610102	Height Rod Slippery Block	1
16	P380610092	Outer Height Rod Top Cover Sticker	3
17	P370210312	M3x12 Flat Head Screw	12
18	P380610085	Outer Height Rod Top Cover	1
19	P370230308	M3x8 Flat Head Screw	10
20	P380610083	Handle	1
21	P380610101	45 Degree Neck	1
22	P380610026	1.0 Swivel Spacer Washer	1
23	P380610084	Swivel Base	1
24	P380610037	Φ28 Wave Spring	2
25	P380610025	4.5 Swivel Spacer Washer	1
26	P380610024	Swivel Holding Washer	1
27	P372111316	M3x16 Round Head Self Tapping Screw	3
28	P380610091	Glide Block	4
29	P372110308	3x8 Round Head Self Tapping Screw	7
30	P380610081	Headpiece	1
31	P380610095	Inner Height Rod	1
32	P380610100	M6x50 Double Screw Bolt	1
33	P369105006	M6 Cover Type Nut	2
34	P380610082	Inner Height Rod Top Cover	1
35	P380610099	Glide Block Spring	7
36	P372110207	2.6x6 Round Head Self-Tapping Screw	14
37	P380610089	Inner Height Rod Bottom Cover	1
38	P380610094	Outer Height Rod	1
39	P370230206	M2x6 Flat Head Screw	2
40	P380610098	Outer Height Rod Stopper	1

SCALE PARTS FOR MAINTENANCE - Continued

Key#	Part#	Description	Qty.
41	P380610086	Outer Height Rod Bottom Cover	1
42	P380610091	Guide Block	2
43	P380610103	Large Guide Block	1
44	P380610080	COM Cable	1
45	P380610097	Sensor Branch PCB L Plate	1
46	P215610380	Sensor Branch PCB	1
47	P370140207	M2.5x6 Flat Head Screw	2
48	P380610104	M6 Screw Plate	2
49	P380610096	Pillar	1
50	P380610079	6P6C Cable	1
51	P380610088	Adapter Box Cover	1
52	P215610310	Height Rod Control PCB	1
53	P380610087	Adapter Box	1
54	ADPT50	Adapter	1
55	P380610093	Pillar Base	1
56	P380610035	Wheel	2
57	P380610038	Φ6 Block Circle	2
58	P380610034	Pillar Base Rubber Foot	2
59	P380610042	Platform	1
60	P381000003	Gradienter 14.7x8mm	1
61	P380610041	Platform Mat	1
62	P380610043	Rubber Bumper	4
63	P3112910002	M3x5 Large Head Screw	1
64	P349150001	UC-O Fixation Block	4
65	P380610039	Scale Base	1
66	P380610048	Foot	4
67	P380610045	Battery Cover	1
68	-	C-Battery (not included)	6
69	P370110305	M3x5 Round Head Screw	3
70	P349070033	Battery Box	1
71	P370340621	M6x22 Round Head Hexagon Screw	8
72	P215610180	Base PCB Assembly	1
73	P370110308	M3x8 Round Head Screw	2
74	P2102910250	250Lb Load Beam	2
75	P375040314	Hex Sealing Screw	1

2-YEAR LIMITED WARRANTY

What does the Warranty Cover?

This Health o meter® Professional scale is warranted from date of purchase against defects of materials or in workmanship for a period of two (2) years. If product fails to function properly, return the product, freight prepaid and properly packed to Customer Service (see "To Get Warranty Service", below, for instructions). If the authorized customer service provider determines that a defect of material or in workmanship exists, the customer's sole remedy will be repair or replacement of the scale at no charge. Replacement will be made with a new or remanufactured product or component. If the product is no longer available, replacement may be made with a similar product of equal or greater value. All parts including repaired and replaced parts are covered only for the original warranty period.

Who is Covered?

The original purchaser of the product must have proof of purchase to receive warranty service. Please save your invoice or receipt. Authorized dealers selling Pelstar products do not have the right to alter, or modify or any way change the terms and conditions of this warranty.

What is Excluded?

Your warranty does not cover normal wear of parts or damage resulting from any of the following: negligent use or misuse of the product, use on improper voltage or current, use contrary to the operating instructions, abuse including tampering, damage in transit, or unauthorized repair or alternations. Further, the warranty does not cover Acts of God, such as fire, flood, hurricanes and tornadoes. This warranty gives you specific legal rights, and you may also have other rights that vary from country to country, state to state, province to province or jurisdiction to jurisdiction.

To get Warranty Service make sure you keep your sales receipt or document showing proof of purchase. If you are advised to return a product for repair or replacement, schedule the repair with the service center nearest you. Call the Customer Service Center nearest you for assistance--please see page 4 of this manual. **Before returning a product, you must obtain authorization from Customer Service.** Customer Service personnel will give you a Service Notification number. Please note this number on the outside of your shipping box. Returns without a Service Notification number will not be accepted for delivery. **Attach your proof of purchase to your defective product along with your name, address, daytime telephone number and description of the problem. Carefully package the product and send it with shipping and insurance prepaid to the address you are given by Customer Service**. Write, "Attention SN#_____", and the shipping address, on the shipping label, following Customer Service instructions.

PRODUCT LIFE: 10 YEARS / 500,000 CYCLES

PELSTAR, LLC
11800 South Austin Avenue • Alsip, IL 60803 • USA
www.homscales.com

Health o meter® Professional products are manufactured, designed and owned by Pelstar, LLC and are distributed by WelchAllyn® outside of the US and Canada. Health o meter® is a registered trademark of Sunbeam Products, Inc. used under license. We reserve the right to improve, enhance or modify Health o meter® Professional product features or specifications without notice.
© Pelstar, LLC 2011

Patent Pending

ISO13485:2003
CERTIFIED