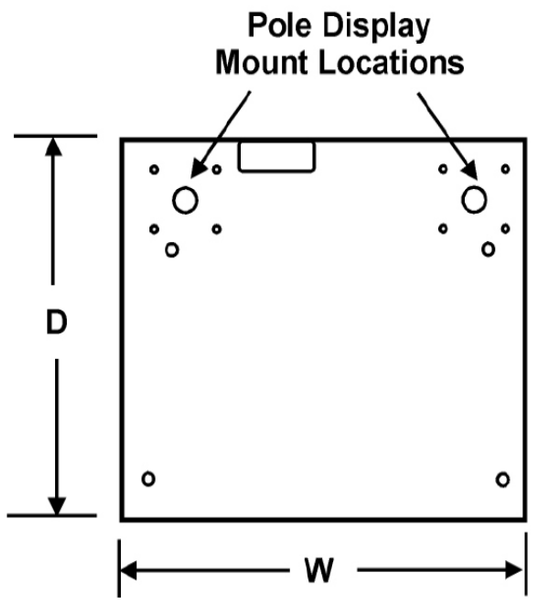

Typical Counter Top Area

Hole should be centered from left to right on front area of drawer.

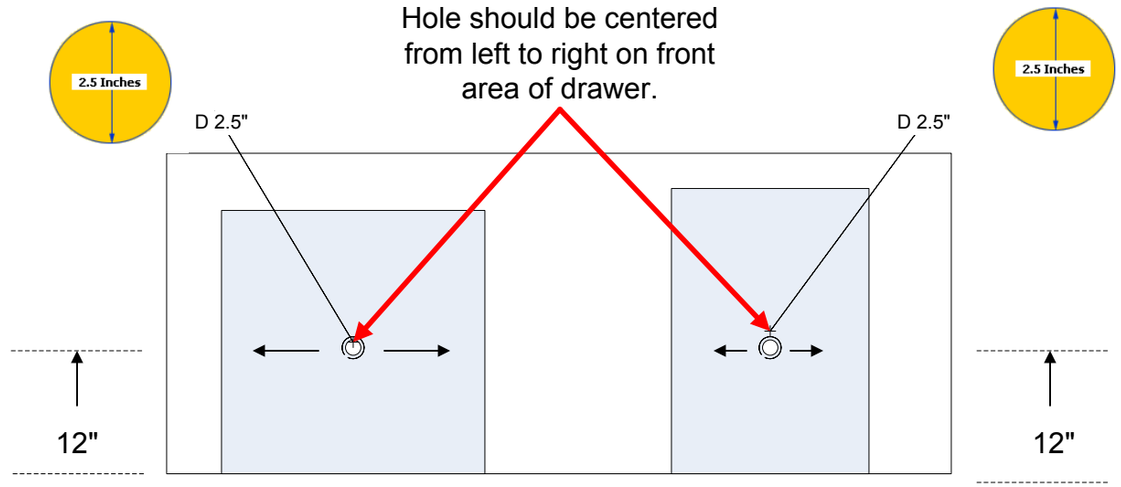

W18.0" x D16.7" x H4.2" **W13.3" x D17.2" x H4.2"**

Cash Drawer Universal Under Counter Mounting Brackets

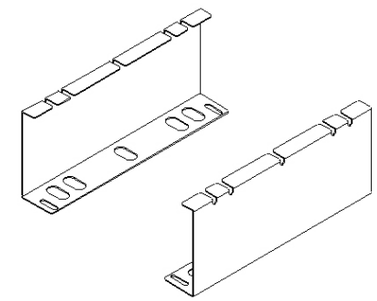

Size 2.4"(w) x 16"(d) x 4.4"(h)

Model - 1820

W18.0" x D16.7" x H4.2"

Model - 1317

W13.3" x D17.2" x H4.2"
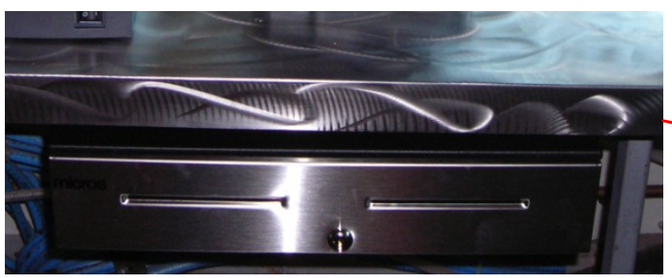
Wood surface provided under countertop for mounting Drawer Brackets