CPED STAFF REPORT

Prepared for the Zoning Board of Adjustment
BOA Agenda Item #4
August 11, 2016
BZZ-7813

LAND USE APPLICATION SUMMARY

Property Location: 900 Mount Curve Avenue

Project Name: First Unitarian Society of Minneapolis Renovation

Prepared By: Janelle Widmeier, Senior City Planner, (612) 673-3156

Applicant: First Unitarian Society of Minneapolis

Project Contact: Edward Kodet, Kodet Architectural Group

Request: To complete exterior improvements.

Required Applications:

Variance	To reduce the minimum front yard requirement adjacent to Mount Curve Avenue from 20 feet to 9.5 feet to allow a canopy/pergola, to 1.75 feet to allow a decorative wall addition, to 0 feet to allow a driveway, and to 14.75 feet to allow a trash enclosure.
Variance	To reduce the minimum interior side yard requirement adjacent to the west lot line to allow a driveway from 5 feet to 0 feet.

SITE DATA

Existing Zoning	R2 Residence District
Lot Area	33,686 square feet
Ward(s)	7
Neighborhood(s)	Lowry Hill
Designated Future Land Use	Urban Neighborhood
Land Use Features	Not applicable
Small Area Plan(s)	Not applicable

Date Application Deemed Complete	July 15, 2016	**Date Extension Letter Sent**	Not applicable
End of 60-Day Decision Period	September 13, 2016	**End of 120-Day Decision Period**	Not applicable

BACKGROUND

SITE DESCRIPTION AND PRESENT USE. The place of assembly located at the property of 900 Mount Curve Avenue was permitted for construction in 1950. The site is a through lot and has frontage on two streets: Mount Curve Avenue and Groveland Terrace. From Mount Curve Avenue to Groveland Terrace, the grade drops more than 30 feet in elevation. The principal entrance faces Mount Curve Avenue. The maintenance storage area is also adjacent to Mount Curve on the west side of the building.

SURROUNDING PROPERTIES AND NEIGHBORHOOD. There is a mix of uses in the immediate area, including low- to high-density residential, offices, and the Walker Art Center. Adjacent to Mount Curve Avenue, a single-family dwelling is adjacent to the west side of the subject property. Thomas Lowry Park is located across Mount Curve Avenue.

PROJECT DESCRIPTION. The applicant is proposing to renovate the building and complete exterior improvements at the property of 900 Mount Curve Avenue. Of the exterior improvements proposed, several require variances to the minimum yard requirements. In the R2 district, the minimum front yard requirement is 20 feet or the established setback created by a line joining those parts of closest principal buildings originally designed for residential purposes nearest to the front lot line, whichever is greater. For this property, the minimum 20 foot district setback requirement applies. Because of their proposed placement and size, the following obstructions are not permitted in a required front yard: canopy/pergola (referred to as a trellis on the plans), decorative wall, driveway, and trash enclosure.

A canopy is a permitted obstruction provided it does not extend more than 2.5 feet into a required front yard. A pergola is a permitted obstruction provided it does not exceed 20 square feet in area and 8 feet in height. The proposed entrance canopy/pergola is 10 feet deep by 85 feet wide by 10 feet tall. Thirty feet of the structure would be a canopy sheltering the principal entrance and bike racks and the remainder would be a pergola with a trellis. At the closest point, the canopy would be 9.5 feet from the front lot line.

A 9 foot tall decorative cast stone and brick, L-shaped wall is proposed adjacent to the principal entrance. The wall would extend from the building under the canopy. At the closest point, the wall would be 1.75 feet from the front lot line.

A new driveway with access from Mount Curve Avenue is proposed on the west side of the property. It would extend to the enclosed yard storage area. Uncovered driveways are a permitted obstruction in a required front yard, provided such driveway is located at least five feet from any property line containing a permitted residential use. A permitted residential use is located on the adjacent property. Driveways are also not allowed in interior side yards for any nonresidential use. For this property, the minimum interior side yard requirement is 12 feet. The driveway would be setback 0 feet from the side lot line. A variance is also required to reduce the minimum interior side yard requirement.

The 180 square foot trash enclosure would be 9 feet tall and clad in brick with composite lumber screening gates. Approximately 38 square feet of the enclosure would project into the required front yard. At the closest point, it would be setback 14.75 feet from the front lot line.

Please note that the applicant will need to work with the Public Works Department for the proposed new curb cut and the relocation of the existing street light.

PUBLIC COMMENTS. As of writing this report, no correspondence from the neighborhood group was received. Any correspondence received prior to the public meeting will be forwarded on to the Board of Adjustment for consideration.

ANALYSIS

VARIANCE

The Department of Community Planning and Economic Development has analyzed the application for **1)** a variance reduce the minimum front yard requirement adjacent to Mount Curve Avenue from 20 feet to 9.5 feet to allow a canopy/pergola, to 1.75 feet to allow a decorative wall addition, to 0 feet to allow a driveway, and to 14.75 feet to allow a trash enclosure; and **2)** a variance to reduce the minimum interior side yard requirement adjacent to the west lot line to allow a driveway from 5 feet to 0 feet, based on the following findings:

1. *Practical difficulties exist in complying with the ordinance because of circumstances unique to the property. The unique circumstances were not created by persons presently having an interest in the property and are not based on economic considerations alone.*

   Both variances: Practical difficulties exist in complying with the ordinance due to circumstances unique to the property. The proposed encroachments are located near the principal entrance and in the existing maintenance storage area adjacent to Mount Curve Avenue. Existing site conditions affect where these areas can be located. The site slopes significantly between the two street frontages. Also, a greater established front yard is required along Groveland Terrace. The grade is most level along Mount Olivet where it is most feasible to have access to service functions and the principal entrance of the building. The existing building is set back 17 to 62 feet from the front lot line along Mount Olivet. This is due in part because the street, as the name suggests, curves adjacent to the site.

   The main entrance is adjacent to the part of the building located closer to the street. There is an existing decorative wall that is two feet from the front lot line and an existing canopy 5 feet deep by 87 feet wide. The applicant has indicated that these structures are in need of repair. Although the proposed site alterations are not subject to Chapter 530 Site Plan Review standards, these standards encourage providing architectural features, such as canopies, to emphasize the importance of the main entrance. The proposed structures would be compatible with the character and scale of the building. The canopy would provide better protection from the elements at the main entrance. The trellis would continue to connect the main entrance to an existing outdoor courtyard that provides additional gathering space.

   The existing maintenance storage area is located between the west side lot line and an outdoor courtyard. It currently encroaches into the required interior side yard and is insufficiently screened. The applicant is proposing to enclose and properly screen the yard and refuse storage and remove the storage from the required interior side yard. However, in order to allow sufficient area for the storage, part of the trash enclosure would extend into the required front yard. The maintenance storage area is proposed to be accessed from a new driveway. The 12 foot wide driveway would also be used temporarily for drop-off of elderly and disabled patrons because there is no on-site parking area.

2. *The property owner or authorized applicant proposes to use the property in a reasonable manner that will be in keeping with the spirit and intent of the ordinance and the comprehensive plan.*

   Both variances: The requests are reasonable and consistent with the intent of the ordinance and the comprehensive plan provided vehicles do not park in the driveway except for drop-off and pick-up. In general, yard controls are established to provide for the orderly development and use of land and to minimize conflicts among land uses by regulating the dimension and use of yards in order to provide adequate light, air, open space and separation of uses.

The proposed canopy/trellis and decorative wall would be compatible with the character and scale of the building and would emphasize the importance of the main entrance. The canopy would also provide better protection from the elements. The trellis would continue to connect the main entrance to an existing outdoor courtyard that provides additional gathering space. The canopy and decorative wall would be located over 60 feet from the adjacent residential property to the east. The west end of the canopy/trellis would be located outside of any required yards. Therefore these structures would have no effect on adjacent properties' access to light, air and open space.

The applicant is proposing to remove the trash and yard storage from the required interior side yard and properly screen the storage area. To accommodate sufficient storage area, part of the trash enclosure would extend into the required front yard. The trash enclosure would be clad in brick to be compatible with the building. Composite boards would be used on the gates to ensure that the refuse containers are sufficiently screened from the adjacent residence. The design facing the street would match the proposed decorative wall adjacent to the main entrance to minimize adverse aesthetic impacts resulting from the storage being located closer to the street. The setback of the adjacent residence is four feet from the front lot line. The setback of the trash enclosure would be 14.75 feet, which would not result in a setback that is out of character with the rest of the block.

The applicant has indicated that the proposed driveway for accessing the storage area would be used intermittently with trash pick only once a week and temporary accessible drop-off to serve the elderly and disabled. The setback of the adjacent residence is four feet from the front lot line and five feet from the interior side lot line. Although driveways in required side yards are not allowed for nonresidential uses, they are allowed for residential uses because traffic impacts are generally less. The proposed grading and drainage plan shows that the driveway would be sloped away from the residential property and water would be directed to a storm inlet in the driveway. Provided vehicles do not park in the driveway except for drop-off and pick-up, the proposal should have no more effect on the adjacent residence than a driveway for a residential use.

3. *The proposed variance will not alter the essential character of the locality or be injurious to the use or enjoyment of other property in the vicinity. If granted, the proposed variance will not be detrimental to the health, safety, or welfare of the general public or of those utilizing the property or nearby properties.*

Both variances: With the adoption of the staff recommendation, the granting of the variances would not affect the character of the area or be injurious to the use or enjoyment of other property in the vicinity. The proposed canopy/trellis, decorative wall, and trash enclosure are designed to be compatible with the scale and architectural style of the building. These structures would have no effect on adjacent properties access to light, air and open space. The trash enclosure would screen the refuse containers, which are currently unscreened and located in required yards. Given the setbacks of and the separation from adjacent properties, the proposed setbacks would be compatible with the surrounding area. The driveway would be sloped away from the adjacent property. The applicant has indicated that the proposed driveway would be used intermittently. Provided vehicles do not park in the driveway except for drop-off and pick-up, the proposal should have no more effect on the adjacent residence than a driveway for a residential use. If granted, the proposed variances would not be detrimental to the health, safety or welfare of the public or those utilizing the property provided the proposed structures are constructed to current building codes.

RECOMMENDATIONS

The Department of Community Planning and Economic Development recommends that the Zoning Board of Adjustment adopt staff findings for the applications by First Unitarian Society of Minneapolis for the properties located at 900 Mount Curve Avenue:

A. Variance to reduce the minimum front yard requirement.

Recommended motion: **Approve** the application for a variance reduce the minimum front yard requirement adjacent to Mount Curve Avenue from 20 feet to 9.5 feet to allow a canopy/pergola, to 1.75 feet to allow a decorative wall addition, to 0 feet to allow a driveway, and to 14.75 feet to allow a trash enclosure, subject to the following conditions:

1. The exterior materials of the canopy/pergola, decorative wall, and trash enclosure shall be compatible with the exterior materials and architectural style of the building.
2. Vehicles shall not park in the driveway except for drop-off and pick-up.
3. Approval of the final site, elevation and floor plans by the Department of Community Planning and Economic Development.
4. All site improvements shall be completed by August 11, 2018, unless extended by the Zoning Administrator, or the permit may be revoked for non-compliance.

B. Variance to reduce the minimum interior side yard requirement.

Recommended motion: **Approve** the application for a variance to reduce the minimum interior side yard requirement adjacent to the west lot line to allow a driveway from 5 feet to 0 feet, subject to the following conditions:

1. Vehicles shall not park in the driveway except for drop-off and pick-up.
2. Approval of the final site, elevation and floor plans by the Department of Community Planning and Economic Development.
3. All site improvements shall be completed by August 11, 2018, unless extended by the Zoning Administrator, or the permit may be revoked for non-compliance.

ATTACHMENTS

1. Zoning map
2. Written description and findings submitted by applicant
3. Survey
4. Site plan
5. Floor plans
6. Building elevation plans
7. Rendering
8. Aerials
9. Photos

First Unitarian Society of Minneapolis **7**

NAME OF APPLICANT WARD

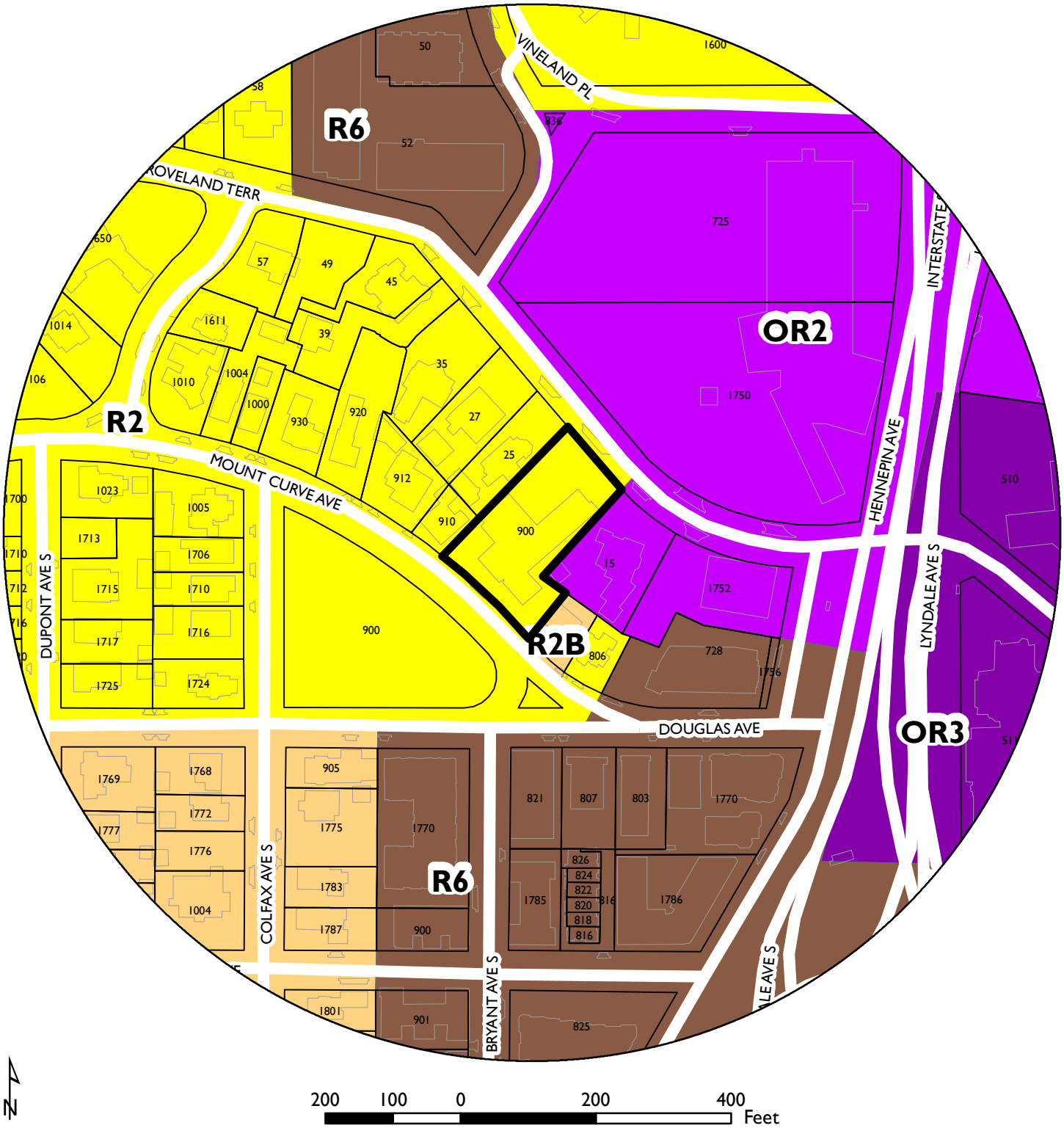

200 100 0 200 400 Feet

PROPERTY ADDRESS

900 Mount Curve Avenue

FILE NUMBER

BZZ-7813

Kodet Architectural Group Ltd.
15 Groveland Terrace • Minneapolis,MN 55403-1154
E-Mail arch@kodet.com • WebSite www.kodet.com
Telephone 612.377.2737 • Facsimile 612.377.1331

VARIANCES
FOR FIRST UNITARIAN SOCIETY OF MINNEAPOLIS

DATE: July 18, 2016

RE: First Unitarian Society of Minneapolis
900 Mount Curve Avenue
Minneapolis, MN 55403

LAND USE APPLICATION

INTRODUCTION

First Unitarian Society of Minneapolis hereby applies for the following four variances, as more fully discussed below, in connection with the planned renovation of their existing church which was built in 1952, located at 900 Mount Curve Avenue (the "Property").

PROJECT SUMMARY

Proposed work at the First Unitarian Society will maintain the current use which is approved within the current R2 zoning district. The proposed work focuses on deferred maintenance, interior mechanical system upgrades, energy efficiency, ADA accessibility upgrades, and elevator replacement.

Interior renovations include the following work:

1. Remove existing two-story elevator and install elevator to access three stories of the building.
2. Replace mechanical equipment for heating, insulate ductwork, install air conditioning, and upgrade HVAC system to meet current code requirements.
3. Replace the following single pane windows: ribbon windows at classrooms, select office windows, and north elevation curtain wall.
4. Replace storefront entrances at north and south elevations.
5. Replace select finishes throughout building.
6. Install all gender restrooms on First Floor.
7. Replace six single restrooms to be accessible restrooms.
8. Install egress stair from Basement on West Elevation.
9. Electrical upgrades.

Exterior renovations include the following work:

1. Rebuild existing decorative screen wall with wing wall addition at South Elevation (Mt. Curve Entry).
2. Replace canopy and trellis at South Elevation (Mt. Curve Entry).
3. Install trash enclosure around existing trash area at South Elevation (180sf). (Mt. Curve Entry)
4. Install curb cut along Mount Curve Avenue with driveway to access trash enclosure and yard storage. Driveway will also be used for temporary accessible vehicle drop off which will better serve the elderly and disabled.
5. Enclosed yard storage next to trash enclosure at south elevation (Mt. Curve Entry).
6. Repair/Replace patio at North Elevation as needed.
7. Upgrade playground for ADA and move to access on intermediate level of Assembly Hall.
8. New ADA ramp at North Entrance to provide accessible entrance from Groveland Terrace and Walker parking ramp.

VARIANCES

As part of this Application, First Unitarian Society of Minneapolis has requested four variances. Each of the requested variances is discussed below:

1. Variance (1) one - To reduce the minimum front yard requirement adjacent to Mount Curve Avenue from 20 feet to 1'-10" for the replacement of an existing decorative wall and canopy and an addition of a decorative brick wall to enhance the Mount Curve Entrance. It must be noted that part of the existing decorative wall and canopy is already within the 20'-0" building setback.

   i. *Practical difficulties exist in complying with the ordinance because of circumstances unique to the property. The unique circumstances were not created by persons presently having an interest in the property and are not based on economic considerations alone.*
   The existing decorative wall and canopy are already within the 20'-0" building set back. The canopy and decorative screen wall have become a maintenance issue, which requires immediate repairs. The main entry to the building has been established since 1950 by the existing building footprint in which the canopy and screen wall serve and protect. The height of the proposed screen wall supporting the canopy will remain unchanged. The proposed design expands the width of the canopy and trellis to make a more inviting entry from the park. Members of the Society often gather, before service, in Thomas Lowry Park across the street. In the spirit of mid-century modern architecture, the trellis provides a more welcoming architectural entry to draw people both into the front doors and into the courtyard. The courtyard is an outdoor gathering space outside of one of the Society's primary meeting rooms. Members will gather in the courtyard before and after services, as well as for special events, for photos, etc. The trellis also provides shading for the large, south-facing windows added facing the park. The brick screen walls are symmetrical elements supporting the canopy and trellis. The size of the west wall is set by the screening of the trash enclosure, and the east wall matches this size. The east wall screens bicycle racks.

   ii. *The property owner or authorized applicant proposes to use the property in a reasonable manner that will be in keeping with the spirit and intent of the ordinance and the comprehensive plan.*
   First Unitarian Society wishes to continue the current use of the site and entry. The canopy and screen provide a covered walkway for those entering the existing building. The current design of the canopy and screen wall will be duplicating the original materials on the building. The design is consistent with the essential mid-century modern character of the building.

   iii. *The proposed variance will not alter the essential character of the locality or be injurious to the use or enjoyment of other property in the vicinity. If granted, the proposed variance will not be detrimental to the health, safety, or welfare of the general public or of those utilizing the property or nearby properties.*
   The circumstances of this variance will allow the building to function as it has for decades. The building character, detail and overall response to the neighborhood will basically remain unchanged.

2. Variance (2) two - To reduce the minimum front yard requirement adjacent to Mount Curve Avenue from 20 feet to 14'-10" for the installation of a trash enclosure (or screen wall).

   i. *Practical difficulties exist in complying with the ordinance because of circumstances unique to the property. The unique circumstances were not created by persons presently having an interest in the property and are not based on economic considerations alone.*
   The front yard currently serves as the location for trash containers. First Unitarian society wishes to build a permanent enclosure around the trash containers. This has been the location of trash containers for decades and it is desired to screen them. The area is currently used for yard equipment and First Unitarian wishes to enclose the yard equipment.

   The area is the same as First Unitarian Society has used for decades and First Unitarian wishes to add enclosures which will benefit neighbors, those passing by, and the view from the street.

   ii. *The property owner or authorized applicant proposes to use the property in a reasonable manner that will be in keeping with the spirit and intent of the ordinance and the comprehensive plan.*
   First Unitarian Society wishes to continue and improve the current use by adding an enclosure around trash containers and yard equipment. The location and use has been in place for decades.

iii. *The proposed variance will not alter the essential character of the locality or be injurious to the use or enjoyment of other property in the vicinity. If granted, the proposed variance will not be detrimental to the health, safety, or welfare of the general public or of those utilizing the property or nearby properties.*
The circumstances of this variance will allow the building to function as it has for decades. The building character, detail and overall response to the neighborhood will basically remain unchanged.

3. Variance (3) three - To reduce the minimum front yard setback adjacent to Mount Curve Avenue from 20 feet to 0 feet to allow a driveway that is located less than 5 feet from an adjacent residential property.

i. *Practical difficulties exist in complying with the ordinance because of circumstances unique to the property. The unique circumstances were not created by persons presently having an interest in the property and are not based on economic considerations alone.*
The front yard currently serves as the location for trash containers. First Unitarian society wishes to build a driveway leading to the trash containers and yard storage. This has been the location of trash containers and yard storage for decades and it is the desired location. Trash pick-up occurs one day a week. Driveway will also be used for temporary accessible vehicle drop off which will better serve the elderly and disabled.

ii. *The property owner or authorized applicant proposes to use the property in a reasonable manner that will be in keeping with the spirit and intent of the ordinance and the comprehensive plan.*
First Unitarian Society wishes to continue and improve the current use by adding a driveway leading to the trash containers and yard equipment. The location and use has been in place for decades. Driveway will also be used for temporary accessible drop off which will better serve the elderly and disabled.

iii. *The proposed variance will not alter the essential character of the locality or be injurious to the use or enjoyment of other property in the vicinity. If granted, the proposed variance will not be detrimental to the health, safety, or welfare of the general public or of those utilizing the property or nearby properties.*
The circumstances of this variance will allow the building to function as it has for decades. The building character, detail and overall response to the neighborhood will basically remain unchanged.

4. Variance (4) four - To reduce the minimum side yard requirement from 12 feet to 0 feet for the installation of a 12'-2" wide driveway.

i. *Practical difficulties exist in complying with the ordinance because of circumstances unique to the property. The unique circumstances were not created by persons presently having an interest in the property and are not based on economic considerations alone.*
The front yard currently serves as the location for trash containers. First Unitarian society wishes to build a driveway leading to the trash containers and yard storage. This has been the location of trash containers and yard storage for decades and it is the desired location. Trash pick-up occurs one day a week. Driveway will also be used for temporary accessible vehicle drop off which will better serve the elderly and disabled.

ii. *The property owner or authorized applicant proposes to use the property in a reasonable manner that will be in keeping with the spirit and intent of the ordinance and the comprehensive plan.*
The front yard currently serves as the location for trash containers. First Unitarian society wishes to build a driveway leading to the trash containers and yard storage. This has been the location of trash containers and yard storage for decades and it is the desired location. Driveway will also be used for temporary accessible drop off which will better serve the elderly and disabled.

iii. *The proposed variance will not alter the essential character of the locality or be injurious to the use or enjoyment of other property in the vicinity. If granted, the proposed variance will not be detrimental to the health, safety, or welfare of the general public or of those utilizing the property or nearby properties.*
The circumstances of this variance will allow the building to function as it has for decades. The building character, detail and overall response to the neighborhood will basically remain unchanged.

Thank you again for taking the time to review this project. The First Unitarian Society has been part of the community for many years. The Church keeps the property very well maintained and takes pride in doing so. The above noted repairs are necessary in order for the building to continue to function as a church. This will allow the Church to continue to be part of the community and to continue to grow with the community.

CONTACTS

First Unitarian Society of Minneapolis:

Timothy Roehl, Director of Facilities
First Unitarian Society of Minneapolis
900 Mount Curve Avenue
Minneapolis, MN 55403
T: (612) 377-6608
F: (612) 377-2151
Email: building@firstunitarian.org

Architect:

Edward J. Kodet, Jr., FAIA
Kodet Architectural Group, Ltd.
15 Groveland Terrace
Minneapolis, MN 55403
T: (612) 377-2737
F: (612) 377-1331
ekodet@kodet.com

BOUNDARY & TOPOGRAPHIC SURVEY FOR:
First Unitarian Society of Minneapolis

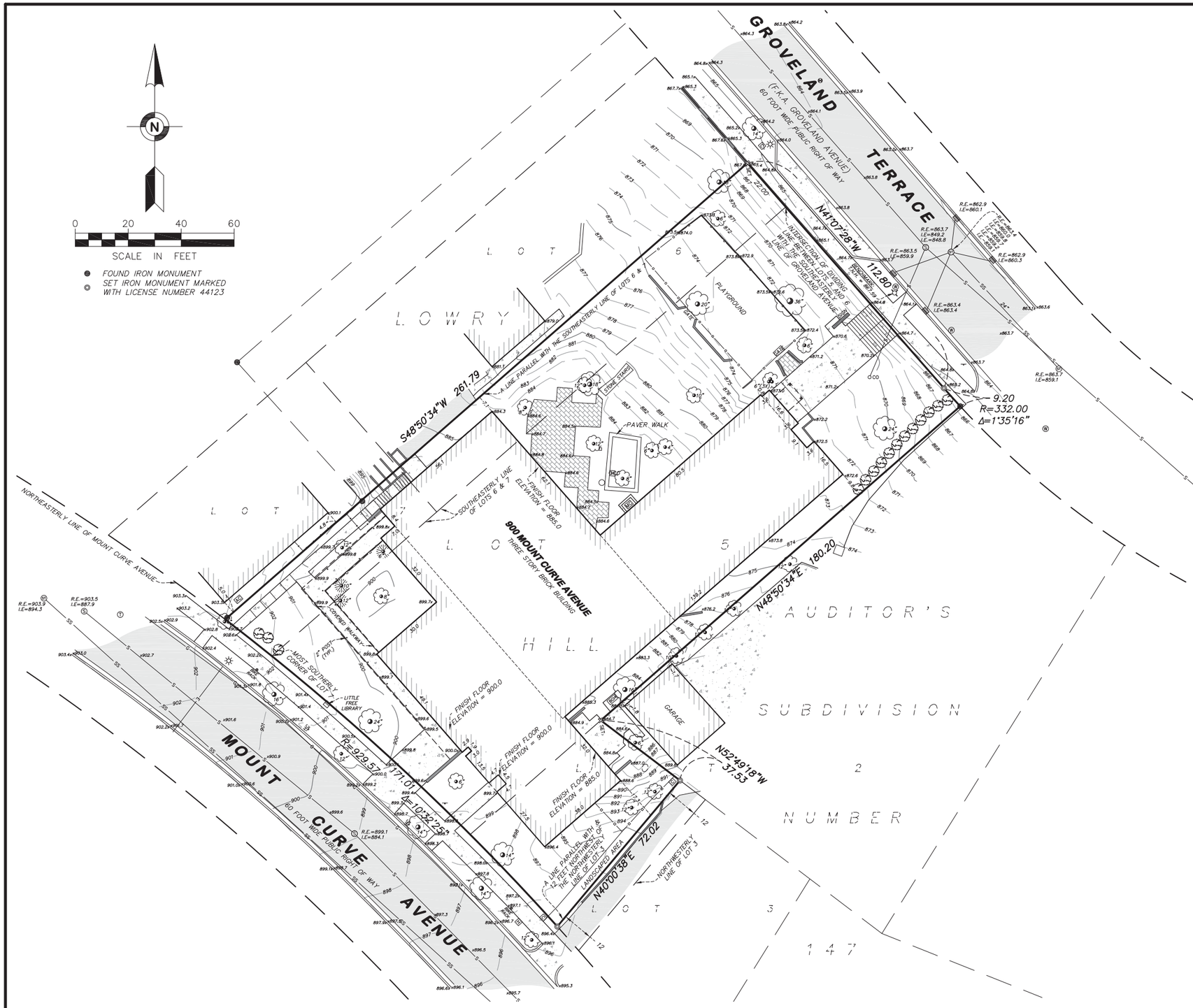

LEGAL DESCRIPTION:

TRACT A:

That part of Lot 2, Auditor's Subdivision Number 147, Hennepin County, Minnesota, lying Southwesterly of the Northeasterly of a line drawn parallel with and 12 feet Northwesterly of and measured at right angles from the Northwesterly line of said Lot 3, according to the plat thereof on file and record in the office of the Register of Deeds in and for Hennepin County, Minnesota.

TRACT B:

Lot 5 and that part of Lots 6 and 7 in Block 2, "Lowry Hill, Hennepin Co. Minnesota" described as follows: Commencing at the intersection of the line dividing said Lot 6 from said Lot 5 with Southeasterly line of Groveland Avenue and running along the line of said Avenue Northwesterly 22 feet, thence Southwesterly and parallel with the Southeasterly line of said Lots 6 and 7, 258 feet more or less to the Northeasterly line of Mount Curve Avenue, thence Southeasterly along the line of said Avenue to the most Southerly corner of said Lot 7, thence Northeasterly along the Southerly line of said Lot 7 and 6 to the point of beginning.

NOTES:

1. The orientation of this bearing system is based on the Hennepin County coordinate grid (NAD 83–96 Adj.).
2. The total area of the property described hereon is 33,686 square feet or 0.7733 acres.
3. The legal description and easement information used in the preparation of this survey is based on the Certificate of Title, Certificate No. 63685 indexes verified through 9/3/2015.
4. Existing utilities, services and underground structures shown hereon were located either physically, from existing records made available to us, by resident testimony, or by locations provided by Gopher State One Call, per Ticket No. 152713647. However, lacking excavation, the exact location of underground features cannot be accurately, completely and reliably depicted. Where additional or more detailed information is required, the client is advised that excavation may be necessary. Other utilities and services may be present and verification and location of all utilities and services should be obtained from the owners of the respective utilities prior to any design, planning or excavation.
5. BENCHMARK: Top of Minnesota Department of Transportation Geodetic Monument "NESS" (GSID Station Number 101703) Elevation = 820.35 feet. (NAVD 88)

CERTIFICATION:

I hereby certify that this survey, plan, or report was prepared by me or under my direct supervision and that I am a duly Licensed Land Surveyor under the laws of the State of Minnesota.

Date of survey: September 21, 2015.
Date of signature: October 12, 2015.

Brent R Peters
Minnesota License No. 44123

LEGEND:

S	SANITARY MANHOLE	—o—o—o—	WOOD FENCE
○CO	CLEAN OUT	—+—+—+—	IRON FENCE
M	STORM MANHOLE	—o—o—o—	CHAIN LINK FENCE
OR	CATCH BASIN	—S—	SANITARY SEWER
○	MANHOLE	—SS—	STORM SEWER
W	WATER MANHOLE	—W—	WATERMAIN
	HYDRANT	—E—	UNDERGROUND ELECTRIC
AC	AIR CONDITIONER	—G—	UNDERGROUND GAS
	LIGHT	x 920.1	SPOT ELEVATION
H	HANDHOLE	920	EXISTING CONTOUR LINE
	GAS VALVE	OR	TREE
T	TELEPHONE MANHOLE		
C	COMMUNICATION BOX		BITUMINOUS SURFACE
	SIGN		
BCH	BENCH		CONCRETE SURFACE
MC	METAL COVER		

FIELD BOOK	PAGE
2634	56

DRAWING NAME: 36435 TOPO.dwg
JOB NO. 36435
FILE NO. 32

FIELDWORK CHIEF: SW, LS, FM
DRAWN BY: PMD
CHECKED BY: BRP

REVISIONS

NO.	DATE	DESCRIPTION

BOUNDARY & TOPOGRAPHIC SURVEY

SURVEY FOR: First Unitarian Society of Minneapolis

PROPERTY ADDRESS: 900 Mount Curve Avenue, Minneapolis, Minnesota 55403

Egan, Field & Nowak, Inc.
land surveyors since 1872
1229 Tyler Street NE, Suite 100
Minneapolis, Minnesota 55413
PHONE: (612) 466-3300
FAX: (612) 466-3383
WWW.EFNSURVEY.COM

COPYRIGHT © 2015 By EGAN, FIELD & NOWAK, INC.

Printed 10/13/2015 at 8:45 AM by Brent Peters

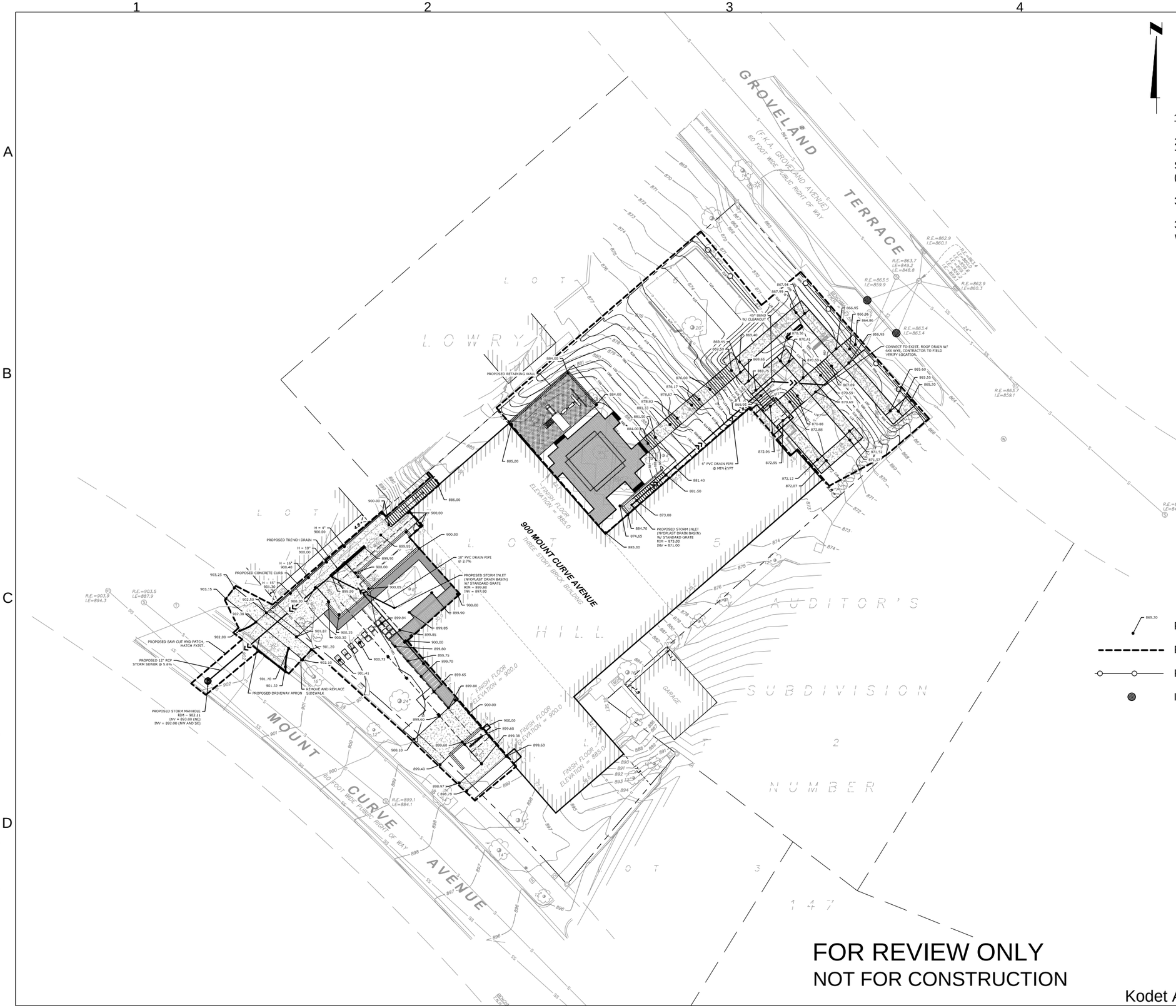

Graphic Scale

1" = 20'-0" (at 22"x34")

Scale in feet: 0 20 40 60

Notes

1. Existing conditions survey prepared by others.

2. BENCHMARK: Top of Minnesota Department of Transportation Geodetic Monument "NESS" (GSID Station Number 101703) Elevation = 820.35 feet. (NAVD 88)

3. Total area of disturbance = 16,604 SF (0.38 AC)

3. Areas proposed as greenspace to be restored with sod, see landscape plan.

865.20 Proposed Spot Elevation

Proposed Limits of Disturbance

Proposed Silt Fence

Inlet Protection

CALL BEFORE YOU DIG !
MINNESOTA LAW REQUIRES EXCAVATORS TO NOTIFY THE REGIONAL NOTIFICATION CENTER AT LEAST TWO (2) BUSINESS DAYS BUT NOT MORE THAN FOURTEEN (14) CALENDAR DAYS PRIOR TO EXCAVATION
GOPHER STATE ONE CALL
www.gopherstateonecall.org
1-800-252-1166

FOR REVIEW ONLY
NOT FOR CONSTRUCTION

Kodet Architectural Group, Ltd. © 2016

I hereby certify that this plan, specification, or report was prepared by me or under my direct supervision and that I am a duly Licensed Professional Engineer under the laws of the State of Minnesota.

Date: XX/XX/2016
CHARLES J. HOWLEY License Number: 42728

© Hansen Thorp Pellinen Olson, Inc.

Engineering • Surveying
Landscape Architecture

HANSEN THORP PELLINEN OLSON, INC
7500 Metro Boulevard • Suite 100
Edina, MN 55439
(952) 835-3544

Date: 07/15/2016
Project No.: 99515
Drawn By: AEM Checked By: CJH
Revisions:

Kodet Architectural Group Ltd.
15 Groveland Terrace • Minneapolis, MN 55403-1154
E-Mail arch@kodet.com • WebSite www.kodet.com
Telephone 612.377.2737 • Facsimile 612.377.1331

First Unitarian Society of Minneapolis
Grading and Erosion Control Plan

900 Mount Curve Ave
Minneapolis, MN 55403

The above drawings, specifications and ideas, designs and arrangements represented are and shall remain the property of the Architect, and no part shall be copied, disclosed to others, or used in connection with any other project for which they have been prepared and developed without the written permission of the Architect. Visual contact with these drawings or specifications shall constitute conclusive evidence of these restrictions.

C1.0
Grading and ESC Plan

FILE: P:\2016\16-055 - First Unitarian Society of Minneapolis\CAD\DWG\PLANSHEETS\CIVIL\16-055_GRADING1.dwg LAYOUT: Layout1
SCALE: 1 DATE/TIME: Jul 14, 2016 - 1:17pm
USER: AMcCallum XREF(S): 16-055_Survey.dwg 16-055_Thock.dwg 99515_LANDSCAPE PLAN - ALT- 1 and 4.dwg

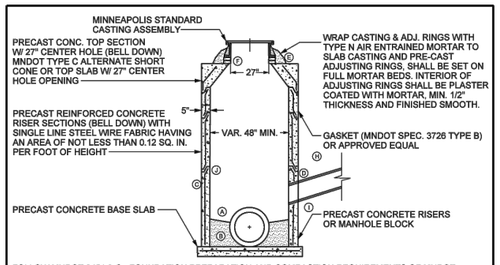

FOLLOW MNDOT 2451.3-C - FOUNDATION PREPARATION AND COMPACTION REQUIREMENTS OF MNDOT 2105.3 F1 - SPECIFIED DENSITY METHOD (100% COMPACTION REQUIREMENTS OF STANDARD PROCTOR)

MNDOT DESIGN F, MODIFIED
CONTINUOUS INSIDE DIAMETER
USE MINNEAPOLIS SHORT CONE SECTION (MNDOT TYPE C ALTERNATE) OR TOP SLAB ONLY

(A) BOTTOM TO BE SHAPED 2/3 OF PIPE DIAMETER WITH POURED CONCRETE TO PROVIDE EFFICIENT FLOW.
(B) WHEN THE INVERT OF THE INLET PIPE IS BELOW THE SPRING LINE OF THE MAIN, THEN PROVIDE CONCRETE "POWER FLOWS" FOR POSITIVE DOWN STREAM FLOW THROUGH MANHOLE.
(C) PRE-CAST CONCRETE MANHOLE SECTIONS.
(D) FILL AROUND INLET PIPE AND LIFTING HOLES WITH CEMENT MORTAR, TYPE N AIR ENTRAINED, FINISH SMOOTH AS NECESSARY. ALL PIPES CONNECTING TO MH'S SHALL BE TRIMMED FLUSH TO THE INTERIOR WALL OF THE MH STRUCTURE.
(E) MANHOLE CASTING SHALL BE SET ON A FULL MORTAR BED, TYPE N AIR ENTRAINED
(F) THE NUMBER OF CONCRETE ADJUSTING RINGS SHALL BE LIMITED TO PROVIDE A MAXIMUM THICKNESS OF 8" INCLUDING MORTAR, TYPE N AIR ENTRAINED WITH A MINIMUM OF 1 - 2" ADJUSTING RING. ALL ADJUSTING RINGS TO BE NEATLY SEALED WITH CONCRETE GROUT, TYPE N AIR ENTRAINED, ON THE INTERIOR OF THE STRUCTURE. MINIMUM OF 2" OF ADJUSTING RINGS & MORTAR TYPE N AIR ENTRAINED REQUIRED. ALL WOOD AND NON-CONCRETE ADJUSTING DEVICES SHALL BE REMOVED.
(G) CONCRETE MANHOLE BLOCK MAY BE USED WITH THE APPROVAL OF CITY ENGINEER. INTERIOR & EXTERIOR OF BLOCK WORK SHALL BE MORTAR PLASTERED, TYPE N AIR ENTRAINED, TO A SMOOTH FINISH, MIN. 1/2" THICKNESS.
(H) SUITABLE BACKFILL UNIFORMLY DISTRIBUTED IN 8" OR LESS LAYERS AND COMPACTED BEFORE SUCCESSIVE LAYERS ARE ADDED. MNDOT 2451.3 D - BACKFILLING EXCAVATIONS, COMPACTION IN ACCORDANCE WITH MNDOT 2105.3 F1 - SPECIFIED DENSITY METHOD.
(J) FILL ANNULAR SPACE ON BELL END OF 1ST RISER SECTION WITH BRICK AND MORTAR, TYPE N AIR ENTRAINED, IF REQUIRED.
(I) WATER STOP REQUIRED ON PVC, DIP, VCP, HDPE, HOBAS, PPP.

MINNEAPOLIS SHORT CONE SECTION SHALL BE USED UNLESS OTHERWISE SPECIFIED IN THE PLANS AND PLASTER COATED WITH TYPE N AIR ENTRAINED MORTAR (TO A SMOOTH FINISH).
ALL PRE-CAST MH RISER SECTIONS SHALL BE CONFIGURED TO PLACE THE BELL END DOWN.

MINNEAPOLIS CUSTOM
MNDOT SPEC. REF. 2506
MODIFIED MNDOT 4003J, 4005L
NOT TO SCALE

MINNEAPOLIS DEPARTMENT OF PUBLIC WORKS		TYPICAL MANHOLE CONSTRUCTION	STANDARD PLATE NO. SEWR-1000-R1
DRAWN: DCD	DATE: 12/09		
APPROVED: HRS	DATE: 12/09		

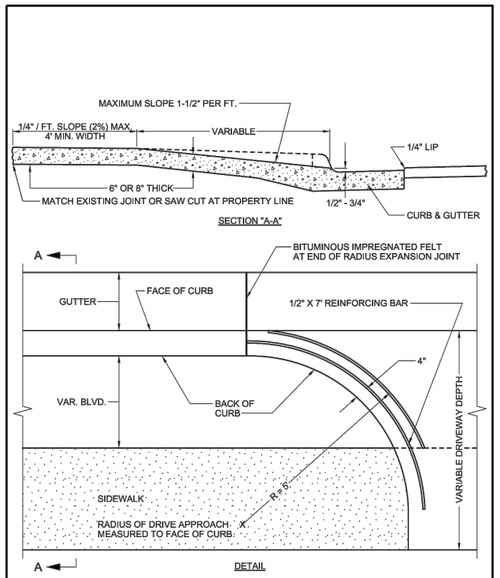

NOTES:
DRIVEWAY APRON AND GUTTER SHALL BE CONSTRUCTED AS A MONOLITHIC POUR.
ALLEY AND COMMERCIAL DRIVE 8" THICK.
RESIDENTIAL DRIVE 6" THICK.

Minneapolis Public Works		TYPICAL DRIVEWAY CONSTRUCTION	STANDARD PLATE NO. ROAD-2001-R1
DRW: JFC	DATE: 6/12/15		
APP: JSH	DATE: 6/29/15		

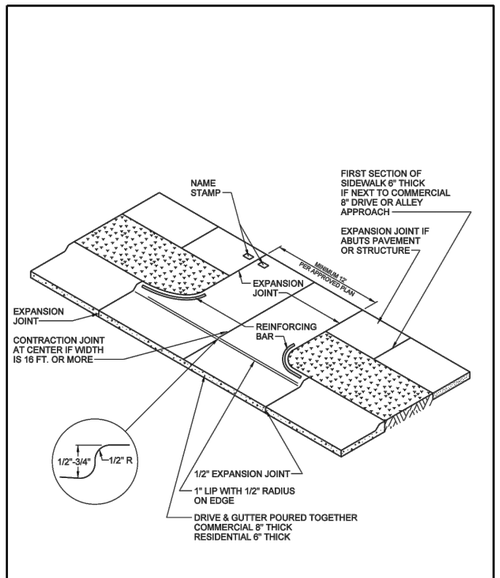

MINNEAPOLIS DEPARTMENT OF PUBLIC WORKS		TYPICAL DRIVEWAY	STANDARD PLATE NO. ROAD-2002
DRAWN: JFC	DATE: 8/10/07		
APPROVED: GAS	DATE: 8/19/08		

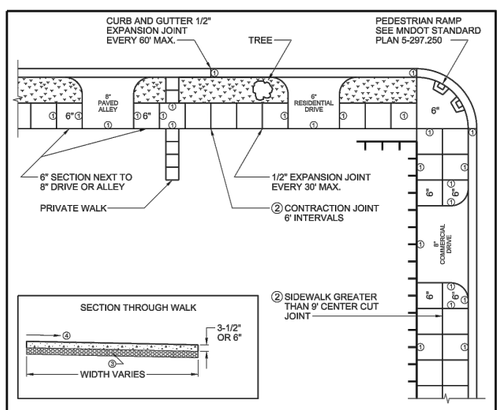

NOTES:
① EXPANSION MATERIAL REQUIRED (SEE MNDOT SPEC BOOK, 2301.3K JOINT CONSTRUCTION).
FIRST SECTION NEXT TO COMMERCIAL DRIVEWAY OR ALLEY 6" THICK.
1/2" THICK EXPANSION JOINTS AT 30' INTERVALS (MAXIMUM).
EXPANSION TO BE USED WHEN SIDEWALK ABUTS:
- BUILDING,
- CURB,
- OTHER PAVEMENTS INDICATED ON GRAPHIC ABOVE.

② CONTRACTION JOINT TO BE CENTERED ON SIDEWALK WIDER THAN 9'. CONTRACTION JOINT TO BE PLACED EVERY 6' OR LESS.

③ DEVELOPMENT PROJECTS SHALL PLACE AND COMPACT 4" OF CLASS 5 AGGREGATE UNDER THE NEW SIDEWALK.

④ SLOPE TOWARD ROADWAY, 3/16" PER FT. TYPICAL, 1/4" PER FT. MAX. AS CONSTRUCTED.

Minneapolis Public Works		TYPICAL SIDEWALK AND DRIVEWAY CONSTRUCTION	STANDARD PLATE NO. ROAD-2003-R1
DRW: JFC	DATE: 1/4/16		
APP: JSH	DATE: 12/30/15		

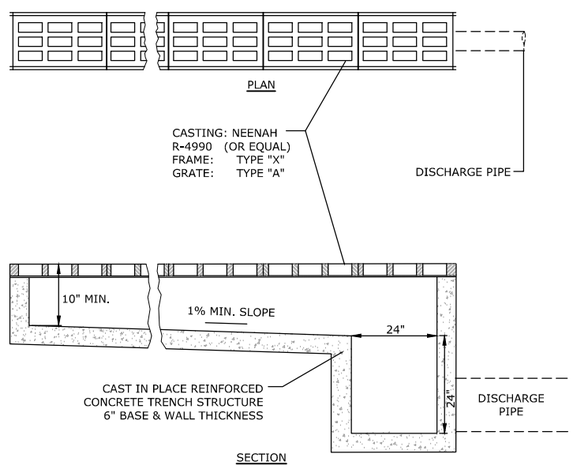

NOTE:

CASTING TO BE INSTALLED PER MANUFACTURER'S RECOMMENDATIONS.

TRENCH DRAIN | STRM-10

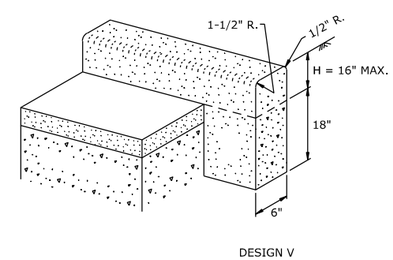

CONCRETE CURB

FOR REVIEW ONLY
NOT FOR CONSTRUCTION

CALL BEFORE YOU DIG !
MINNESOTA LAW REQUIRES EXCAVATORS TO NOTIFY THE REGIONAL NOTIFICATION CENTER AT LEAST TWO (2) BUSINESS DAYS BUT NOT MORE THAN FOURTEEN (14) CALENDAR DAYS PRIOR TO EXCAVATION
GOPHER STATE ONE CALL
www.gopherstateonecall.org
1-800-252-1166

Kodet Architectural Group Ltd. © 2016

FILE: P:\2016\16-055 - First Unitarian Society of Minneapolis\CAD\DWG\PLANSHEETS\CIVIL\16-055_DETAILS-01.dwg LAYOUT: Layout1
SCALE: 1 DATE/TIME: Jul 14, 2016 - 1:19pm
USER: MeCallum XREF(s): 16-055_TBlock-details.dwg

I hereby certify that this plan, specification, or report was prepared by me or under my direct supervision and that I am a duly Licensed Professional Engineer under the laws of the State of Minnesota.

Date: XX/XX/2016
CHARLES J. HOWLEY License Number: 42728

© Hansen Thorp Pellinen Olson, Inc.

HTPO Engineering • Surveying Landscape Architecture
HANSEN THORP PELLINEN OLSON, Inc
7500 Meadowlake Drive
Chanhassen, MN 55344
(952) 934-2050 • FAX (952) 934-2051

Date: 07/15/2016
Project No.: 99515
Drawn By: AEM Checked By: CJH
Revisions:

Kodet Architectural Group Ltd.
15 Groveland Terrace • Minneapolis, MN 55403-1154
E-Mail arch@kodet.com • WebSite www.kodet.com
Telephone 612.377.2737 • Facsimile 612.377.1331

The above drawings, specifications and ideas, designs and arrangements represented are and shall remain the property of the Architect, and no part shall be copied, disclosed to others, or used in connection with any other project for which they have been prepared and developed without the written permission of the Architect. Visual contact with these drawings or specifications shall constitute conclusive evidence of all these restrictions.

First Unitarian Society of Minneapolis
Details

900 Mount Curve Ave
Minneapolis, MN 55403

C2.1
Civil Details

SILT FENCE INSTALLATION

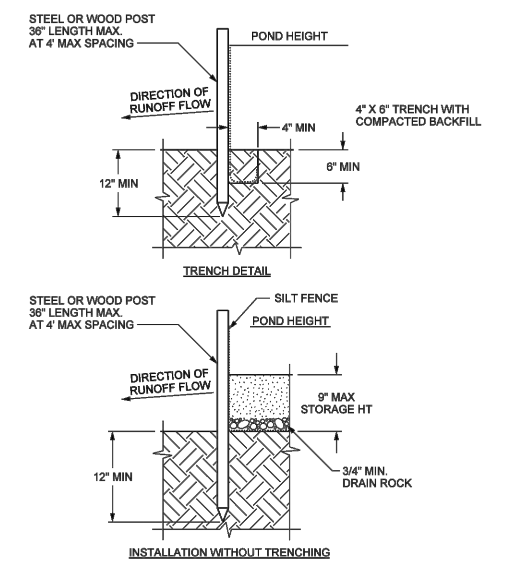

USE HI-FLOW FILTER FABRIC, 200 GAL. PER MINUTE PER SQUARE FOOT

NOTES:
1. SILT FENCE SHALL BE PLACED ON SLOPE CONTOURS TO MAXIMIZE PONDING EFFICIENCY.
2. INSPECT AND REPAIR FENCE AFTER EACH STORM EVENT AND REMOVE SEDIMENT WHEN NECESSARY, REQUIRED WHEN 1/3 FULL WITHIN 24 HOURS OF DISCOVERY. 9" MAXIMUM RECOMMENDED STORAGE HEIGHT.
3. REMOVED SEDIMENT SHALL BE DEPOSITED TO AN AREA THAT WILL NOT CONTRIBUTE SEDIMENT OFF-SITE AND PERMANENTLY STABILIZED ALSO SEE SEWR-8009.

REFERENCES:
MINNESOTA URBAN SMALL SITES BMP MANUAL
MNDOT EROSION CONTROL HANDBOOK

MINNEAPOLIS CUSTOM
MNDOT SPEC. REF. 2573, 3886, 3889.2 TYPE I
NOT TO SCALE

MINNEAPOLIS DEPARTMENT OF PUBLIC WORKS		SEDIMENT CONTROL -- SILT FENCE	STANDARD PLATE NO. SEWR-8001
DRAWN: CXD	DATE: 3/03		
APPROVED: HRS	DATE: 4/07		

INLET PROTECTION TYPE A & C

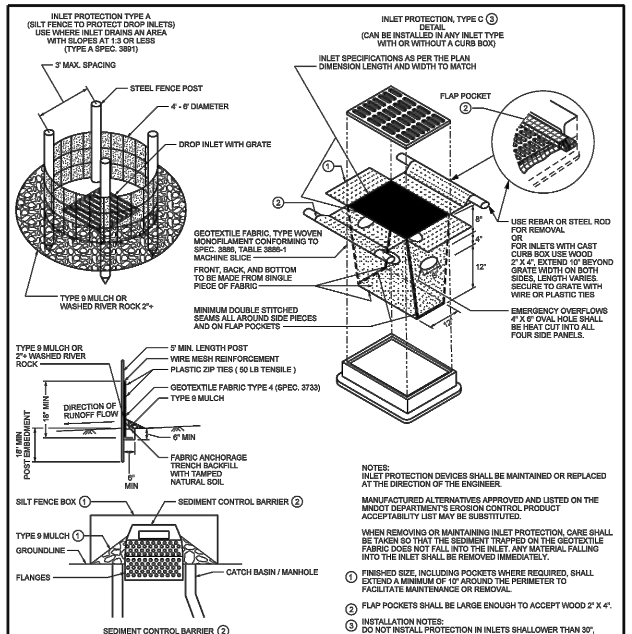

NOTES:
THE SEDIMENT CONTROL BARRIER SHALL BE A METAL OR PLASTIC/POLYETHELENE RISER SIZED TO FIT INSIDE THE CATCH BASIN/MANHOLE; HAVE PERFORATIONS TO ALLOW FOR WATER INFILTRATION; HAVE AN OVERFLOW OPENING, FLANGES AND A LID/COVER.

① USE INLET PROTECTION TYPE A OR TYPE 9 MULCH, AS DIRECTED BY THE ENGINEER.

② PAID FOR AS SEDIMENT CONTROL BARRIER.

NOTES:
INLET PROTECTION DEVICES SHALL BE MAINTAINED OR REPLACED AT THE DIRECTION OF THE ENGINEER.

MANUFACTURED ALTERNATIVES APPROVED AND LISTED ON THE MNDOT DEPARTMENT'S EROSION CONTROL PRODUCT ACCEPTABILITY LIST MAY BE SUBSTITUTED.

WHEN REMOVING OR MAINTAINING INLET PROTECTION, CARE SHALL BE TAKEN SO THAT THE SEDIMENT TRAPPED ON THE GEOTEXTILE FABRIC DOES NOT FALL INTO THE INLET. ANY MATERIAL FALLING INTO THE INLET SHALL BE REMOVED IMMEDIATELY.

① FINISHED SIZE, INCLUDING POCKETS WHERE REQUIRED, SHALL EXTEND A MINIMUM OF 10" AROUND THE PERIMETER TO FACILITATE MAINTENANCE OR REMOVAL.

② FLAP POCKETS SHALL BE LARGE ENOUGH TO ACCEPT WOOD 2" X 4".

③ INSTALLATION NOTES:
DO NOT INSTALL PROTECTION IN INLETS SHALLOWER THAN 30", MEASURED FROM THE BOTTOM OF THE INLET TO THE TOP OF THE GRATE.

TRIM EXCESS FABRIC IN THE FLOW LINE TO WITHIN 3" OF THE GRATE.

THE INSTALLED BAG SHALL HAVE A MINIMUM SIDE CLEARANCE, MAXIMUM OF 4" FROM THE BOTTOM OF THE BAG. BETWEEN THE INLET WALLS AND THE BAG, MEASURED AT THE BOTTOM OF THE OVERFLOW HOLES, OF 3". WHERE NECESSARY THE CONTRACTOR SHALL CLINCH THE BAG, USING PLASTIC ZIP TIES, TO ACHIEVE THE 3" CLEARANCE. THE TIES SHALL BE PLACED AT A MAXIMUM OF 4" FROM THE BOTTOM OF THE BAG.

REFERENCES:
MNDOT DRAFT PLATES

MINNEAPOLIS CUSTOM
MNDOT SPEC. REF. 3891
NOT TO SCALE

MINNEAPOLIS DEPARTMENT OF PUBLIC WORKS		INLET PROTECTION TYPE A & C	STANDARD PLATE NO. SEWR-8003
DRAWN: DCD	DATE: 1/05		
APPROVED: HRS	DATE: 4/07		

EROSION AND SEDIMENT CONTROL NOTES

INSTALL PERIMETER EROSION CONTROLS AS INDICATED IN PLANS PRIOR TO START OF WORK. HAY BALES ARE NOT ALLOWED AS EROSION & SEDIMENT CONTROL DEVICE IN MINNEAPOLIS.

ESTABLISH ROCK CONSTRUCTION ENTRANCES PRIOR TO BEGINNING LAND DISTURBING ACTIVITIES. 1 1/2" - 3" WASHED AGGREGATE IS RECOMMENDED FOR ROCK ENTRANCES, A GEOTEXTILE FABRIC IS REQUIRED.

REMOVE ALL SOILS AND SEDIMENTS DEPOSITED ONTO PUBLIC AND/OR PRIVATE PAVEMENT AREAS WITHIN 24 HOURS OF DEPOSITION. REMOVAL OF TRACKING MATERIALS SHALL BE COMPLETED AT THE END OF EACH WORK DAY WHEN TRACKING OCCURS. SWEEPING MAY BE ORDERED AT ANY TIME IF CONDITIONS WARRANT. SWEEPING SHALL BE MAINTAINED THROUGHOUT THE DURATION OF CONSTRUCTION AND IN SUCH A MANNER TO PREVENT DUST BEING BLOWN TO ADJACENT PROPERTIES.

INSTALL INLET PROTECTION IN ALL DOWNSTREAM CATCH BASINS WHICH RECEIVE RUNOFF FROM THE DISTURBED AREA. CATCH BASIN INSERTS ARE REQUIRED AT ALL LOCATIONS NOT WITHIN THE DISTURBED AREA WHICH RECEIVE RUNOFF (MNDOT TYPE C INLET PROTECTION). NOTE HAY BALES AND SILT FENCE WRAPPED GRATES ARE NOT EFFECTIVE AND ARE NOT APPROVED FOR USE AS INLET PROTECTION DEVICES.

LOCATE ALL SOIL AND DIRT PILES NO LESS THAN 25 FEET FROM ANY PUBLIC OR PRIVATE ROADWAY OR DRAINAGE CHANNEL. ALL STOCK PILES THAT REMAIN IN PLACE FOR 7 DAYS OR MORE SHALL BE STABILIZED BY MULCHING, VEGETATIVE COVER, TARPING OR OTHER MEANS. TEMPORARY STOCK PILES LOCATED ON PAVED SURFACES MUST BE AT LEAST 2 FEET OR MORE AWAY FROM THE DRAINAGE/GUTTER LINE AND SHALL BE COVERED IF REMAINING MORE THAN 24 HOURS.

MAINTAIN ALL TEMPORARY EROSION CONTROL DEVICES IN PLACE UNTIL THE CONTRIBUTING DRAINAGE AREA HAS BEEN STABILIZED. INSPECT TEMPORARY EROSION AND SEDIMENT CONTROL DEVICES ON A WEEKLY BASIS AND REPLACE DETERIORATED, DAMAGED OR ROTTED EROSION CONTROL DEVICES IMMEDIATELY.

MAINTENANCE OF EROSION AND SEDIMENT CONTROL DEVICES SHALL BE PERFORMED WHENEVER THE DEVICE IS 30% FULL, FAILURE TO MAINTAIN EROSION CONTROL DEVICES MAY LEAD TO FURTHER ENFORCEMENT ACTION. WEEKLY INSPECTIONS REQUIRED AND AFTER EACH 1/2" OR MORE RAIN EVENT WITHIN 24 HRS.

READY MIXED CONCRETE AND BATCH PLANT WASHOUTS PROHIBITED WITHIN THE PUBLIC RIGHT OF WAY, DESIGNATE CONCRETE WASHOUT AND MIXING LOCATIONS IN THE EROSION CONTROL PLANS. UNDER NO CIRCUMSTANCES MAY WASHOUT WATER DRAIN ONTO THE PUBLIC RIGHT OF WAY OR INTO THE PUBLIC STORM DRAIN.

TEMPORARILY OR PERMANENTLY STABILIZE ALL DENUDED AREAS WHICH HAVE BEEN FINISH GRADED WITHIN 7-14 DAYS (SLOPE DEPENDENT). USE SEEDING AND MULCHING, EROSION CONTROL MATTING AND/OR SODDING WITH TEMPORARY STAKING IN GREEN SPACE AREAS. USE EARLY APPLICATION OF GRAVEL BASE FOR AREAS DESIGNATED FOR PAVED SURFACING.

REMOVE ALL TEMPORARY SYNTHETIC, STRUCTURAL AND NON-BIODEGRADABLE EROSION AND SEDIMENT CONTROL AFTER THE SITE HAS UNDERGONE FINAL STABILIZATION AND PERMANENT VEGETATION HAS BEEN ESTABLISHED, MINIMUM VEGETATION COVER OF 70% REQUIRED, ALL TEMPORARY EROSION AND SEDIMENT CONTROL DEVICES SHALL BE MAINTAINED UNTIL THE SITE HAS 70% ESTABLISHED VEGETATIVE COVER AND ALL PAVED AREAS HAVE BEEN STABILIZED WITH THE SELECTED PAVEMENT TYPE.

ADDITIONAL EROSION CONTROL MAY BE REQUIRED BY OTHER PERMITTING AGENCIES, IT IS THE RESPONSIBILITY OF THE PROJECT ENGINEER TO VERIFY THAT THE CITY AND ALL OTHER AGENCY REQUIREMENTS ARE MET.

MINNEAPOLIS CUSTOM
MNDOT SPEC. REF. 2573
NOT TO SCALE

MINNEAPOLIS DEPARTMENT OF PUBLIC WORKS		EROSION CONTROL NOTES	STANDARD PLATE NO. SEWR-8007
DRAWN: DCD	DATE: 8/06		
APPROVED: HRS	DATE: 3/07		

NYLOPLAST DRAIN BASIN WITH STANDARD GRATE

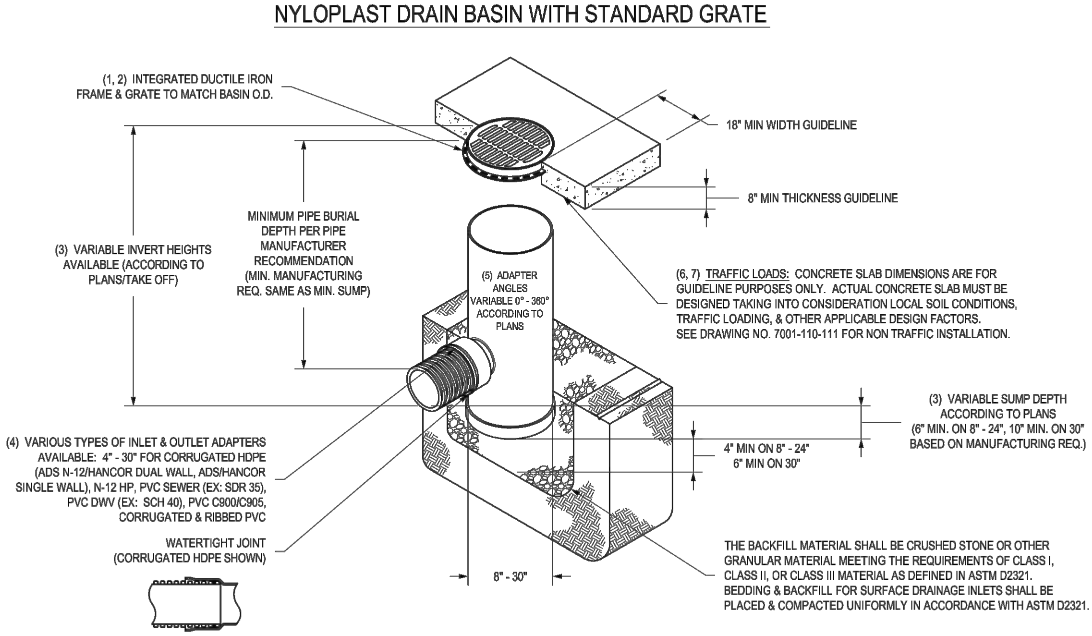

1 - 8" - 30" STANDARD GRATES SHALL BE DUCTILE IRON PER ASTM A536 GRADE 70-50-05.
2 - 12" - 30" FRAMES SHALL BE DUCTILE IRON PER ASTM A536 GRADE 70-50-05. 8" & 10" STANDARD GRATES FIT DIRECTLY ONTO DRAIN BASINS WITH THE USE OF A PVC BODY TOP. SEE DRAWING NO. 7001-110-045.
3 - DRAIN BASIN TO BE CUSTOM MANUFACTURED ACCORDING TO PLAN DETAILS. RISERS ARE NEEDED FOR BASINS OVER 84" DUE TO SHIPPING RESTRICTIONS. SEE DRAWING NO. 7001-110-065.
4 - DRAINAGE CONNECTION STUB JOINT TIGHTNESS SHALL CONFORM TO ASTM D3212 FOR CORRUGATED HDPE (ADS N-12/HANCOR DUAL WALL), N-12 HP, & PVC SEWER (4" - 24").
5 - ADAPTERS CAN BE MOUNTED ON ANY ANGLE 0° TO 360°. TO DETERMINE MINIMUM ANGLE BETWEEN ADAPTERS SEE DRAWING NO. 7001-110-012.
6 - 12" - 30" STANDARD GRATES SHALL MEET H-20 LOAD RATING.
7 - 8" & 10" STANDARD GRATES ARE RATED FOR LIGHT DUTY APPLICATIONS ONLY; NO CONCRETE COLLAR NEEDED FOR LIGHT DUTY RATING.

THIS PRINT DISCLOSES SUBJECT MATTER IN WHICH NYLOPLAST HAS PROPRIETARY RIGHTS. THE RECEIPT OR POSSESSION OF THIS PRINT DOES NOT CONFER, TRANSFER, OR LICENSE THE USE OF THE DESIGN OR TECHNICAL INFORMATION SHOWN HEREIN REPRODUCTION OF THIS PRINT OR ANY INFORMATION CONTAINED HEREIN, OR MANUFACTURE OF ANY ARTICLE HEREFROM, FOR THE DISCLOSURE TO OTHERS IS FORBIDDEN, EXCEPT BY SPECIFIC WRITTEN PERMISSION FROM NYLOPLAST. ©2011 NYLOPLAST	DRAWN BY EBC	MATERIAL	Nyloplast 3130 VERONA AVE BUFORD, GA 30518 PHN (770) 932-2443 FAX (770) 932-2490 www.nyloplast-us.com
	DATE 1-23-06		
	REVISED BY NMH	PROJECT NO./NAME	TITLE DRAIN BASIN WITH STANDARD GRATE QUICK SPEC INSTALLATION DETAIL
	DATE 03-11-16		
	DWG SIZE A	SCALE 1:40 SHEET 1 OF 1	DWG NO. 7001-110-144 REV H

FOR REVIEW ONLY
NOT FOR CONSTRUCTION

CALL BEFORE YOU DIG !
MINNESOTA LAW REQUIRES EXCAVATORS TO NOTIFY THE REGIONAL NOTIFICATION CENTER AT LEAST TWO (2) BUSINESS DAYS BUT NOT MORE THAN FOURTEEN (14) CALENDAR DAYS PRIOR TO EXCAVATION
GOPHER STATE ONE CALL
www.gopherstateonecall.org
1-800-252-1166

First Unitarian Society of Minneapolis
Details
900 Mount Curve Ave
Minneapolis, MN 55403

Date: 07/15/2016
Project No.: 99515
Drawn By: AEM Checked By: CJH
Revisions:

Kodet Architectural Group Ltd.
15 Groveland Terrace • Minneapolis, MN 55403-1154
E-Mail arch@kodet.com • WebSite www.kodet.com
Telephone 612.377.2737 • Facsimile 612.377.1331

Engineering-Surveying
Landscape Architecture
Hansen Thorp Pellinen Olson, Inc.

C2.2
Civil Details

Kodet Architectural Group, Ltd. © 2016

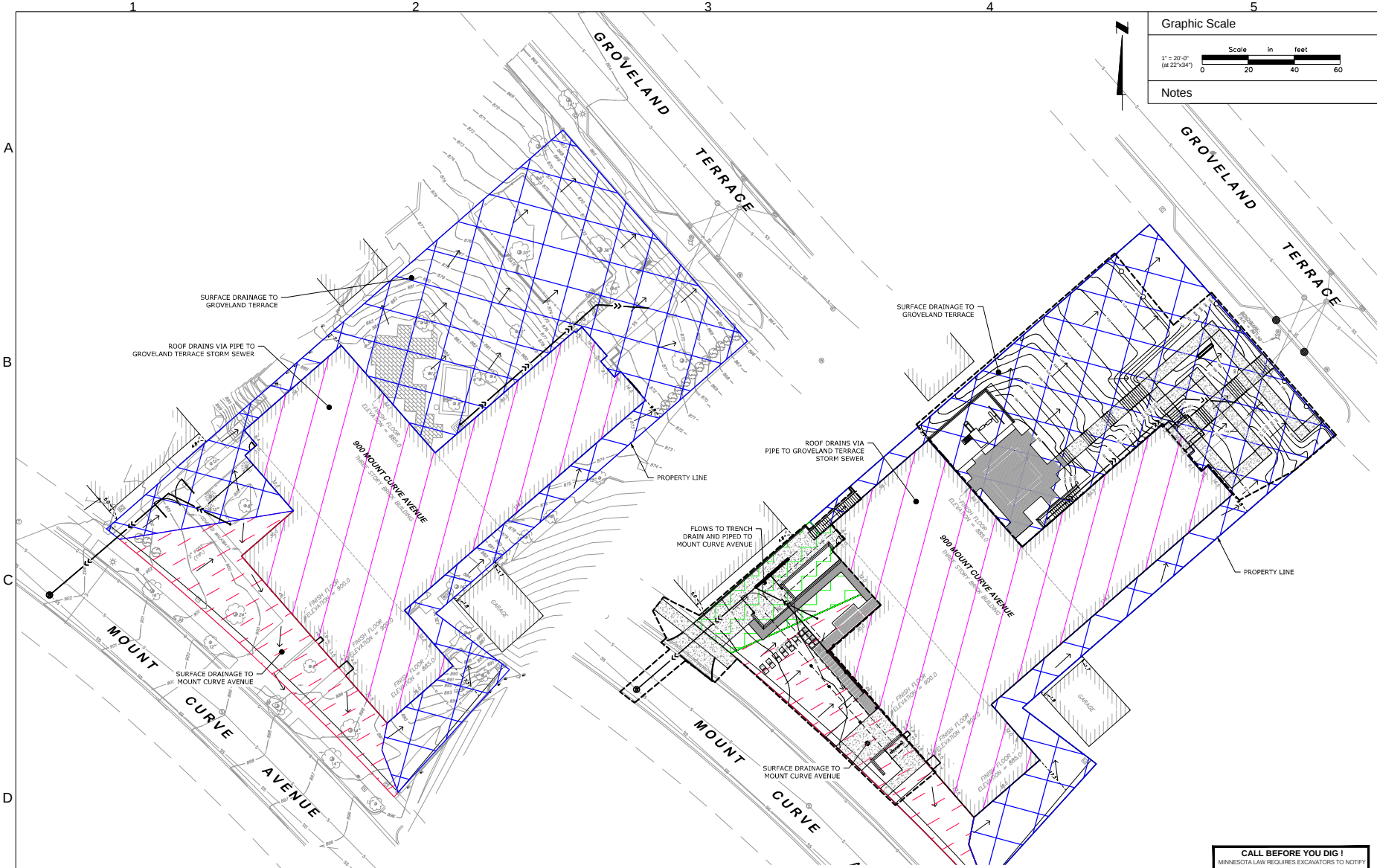

EXISTING DRAINAGE PATTERN

PROPOSED DRAINAGE PATTERN

FOR REVIEW ONLY
NOT FOR CONSTRUCTION

CALL BEFORE YOU DIG !
MINNESOTA LAW REQUIRES EXCAVATORS TO NOTIFY THE REGIONAL NOTIFICATION CENTER AT LEAST TWO (2) BUSINESS DAYS BUT NOT MORE THAN FOURTEEN (14) CALENDAR DAYS PRIOR TO EXCAVATION
GOPHER STATE ONE CALL
www.gopherstateonecall.org
1-800-252-1166

Kodet Architectural Group, Ltd. © 2016

Kodet Architectural Group Ltd.
15 Groveland Terrace • Minneapolis, MN 55403-1154
E-Mail arch@kodet.com • Website www.kodet.com
Telephone 612.377.2737 • Facsimile 612.377.1331

Date: 07/15/2016
Project No.: 99515
Drawn By: AEM Checked By: CJH
Revisions:

Engineering•Surveying
Landscape Architecture
Hansen Thorp Pellinen Olson, Inc
7601 Metro Blvd • Suite 100 • Edina, MN 55439-2108
952.832.9090 • 952.832.9091 fax

I hereby certify that this plan, specifications, or report was prepared by me or under my direct supervision and that I am a duly Licensed Professional Engineer under the laws of the State of Minnesota.
Charles J. Hansen Date: 10/06/2016
Reg. No. 14000 License Number: 40200

TITLE: FIRST UNITARIAN SOCIETY

The drawings, specifications or reports, design and engineering represented are and remain the property of the Kodet, and no part shall be used or reproduced without the written consent of the Kodet. Failure of any entity to obtain design or specifications shall constitute conclusive evidence of their rejection.

First Unitarian Society of Minneapolis
Drainage Areas
900 Mount Curve Ave
Minneapolis, MN 55403

FILE: P:\2016\16-055 - First Unitarian Society of Minneapolis\CAD\WCP\PLANSHEETS\C\16-055_DRAINAGE.dwg LAYOUT: DRAINAGE
SCALE: 1 DATE/TIME: Jul 14, 2016 - 1:23pm
USER: AMcCallum XREF(s): 16-055_Survey.dwg 16-055_Thick.dwg 16-055_EXISTIN.dwg 16-055_P-ORIGIN.dwg 99515_LANDSCAPE PLAN - ALT 1 - 1 and 4.dwg

Legend	General Notes	Graphic Scales
REMOVE TREE EX. PROTECT EX. TREES TO REMAIN	1. OWNER TO HAVE OPTION OF SALVAGING ALL PLANTS PRIOR TO DEMOLITION 2. ALL TREES SHOWN IN DRAWING ARE 4" IN DIAMETER OR LARGER	1" = 10' - 0" 0' 5' 10' 20'

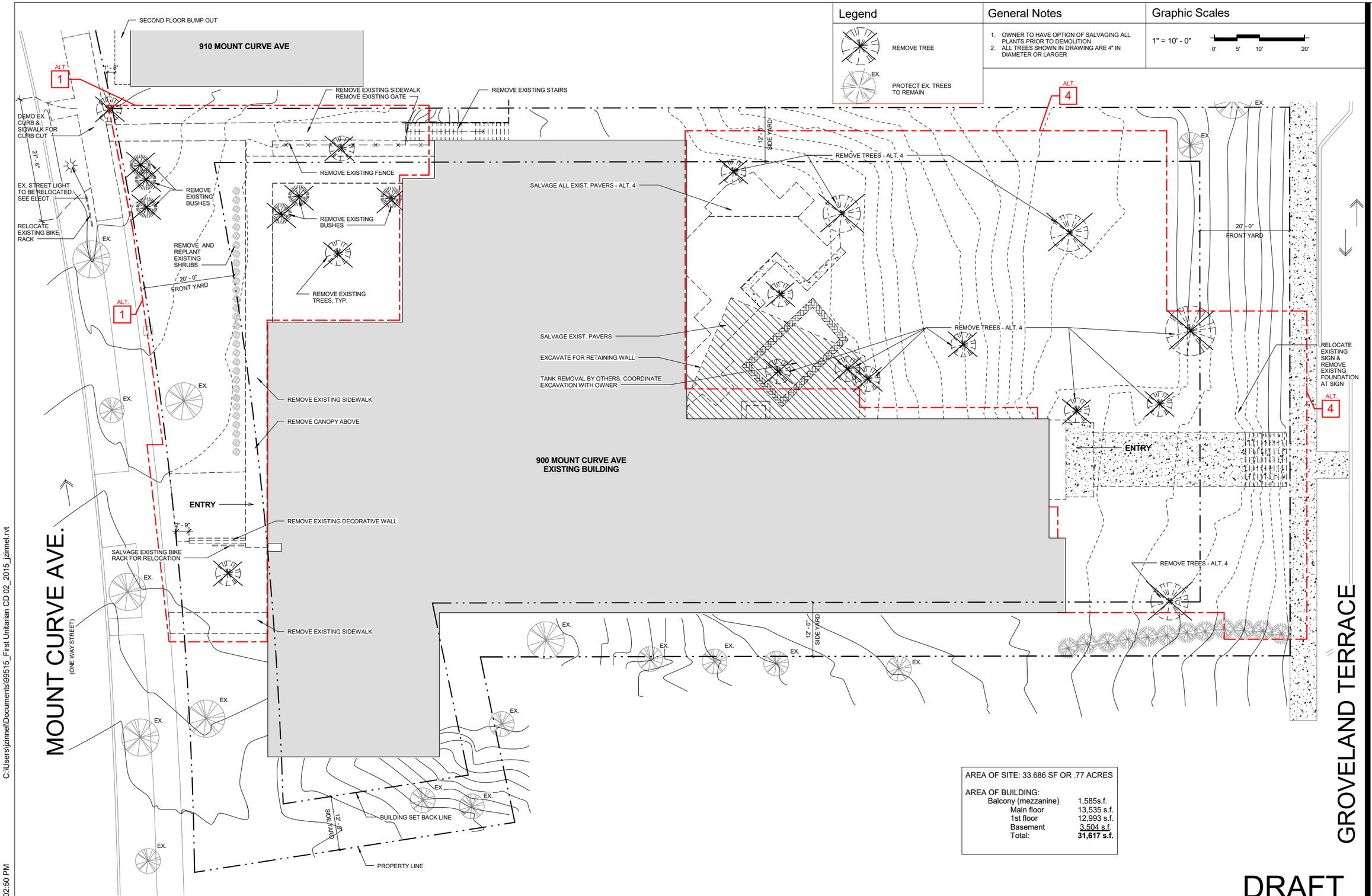

AREA OF SITE: 33.686 SF OR .77 ACRES

AREA OF BUILDING:

Balcony (mezzanine)	1,585s.f.
Main floor	13,535 s.f.
1st floor	12,993 s.f.
Basement	3,504 s.f.
Total:	**31,617 s.f.**

D1 AD0.1 DEMO SITE PLAN
1" = 10'-0"

TRUE NORTH PROJECT NORTH

DRAFT
NOT FOR CONSTRUCTION

Kodet Architectural Group, Ltd. © 2016

I hereby certify that this plan, specification, or report was prepared by me or under my direct supervision, and that I am a duly Licensed Architect under the laws of the State of Minnesota.

Date June 30, 2016
License Number: 10206
Architect Edward J. Kodet, Jr. - FAIA

©Kodet Architectural Group, Ltd.

Date: 06/03/16
Project No.: 99515
Drawn By: Author Checked By: Checker
Revisions:

Kodet Architectural Group Ltd.
15 Groveland Terrace • Minneapolis,MN 55403-1154
E-Mail arch@kodet.com • WebSite www.kodet.com
Telephone 612.377.2737 • Facsimile 612.377.1331

The above drawings, specifications and ideas, design and arrangements represented are and shall remain the property of the Architect, and no part shall be copied, disclosed to others, or used in connection with any other project for which they have been prepared and developed without the written permission of the Architect. Visual contact with these drawings or specifications shall constitute conclusive evidence of these restrictions.

First Unitarian Society of Minneapolis
Renovation
900 Mount Curve Ave
Minneapolis, MN 55403

AD0.1
Demo Site

C:\Users\jzinnel\Documents\99515_First Unitarian CD 02_2015_jzinnel.rvt
7/14/2016 2:02:50 PM

Lighting Legend

- Trellis Light
- Wall Mounted Emergency Lighting
- Site Lighting
- 27" High Bollard
- Exterior Recessed Lighting Fixture
- Exterior Wall Sconce

Site Legend

- Poured Concrete
- 24" x 24" Pavers
- Exist. Sidewalk
- Pavers
- Playground Ground Cover
- Sod - As required in all disturbed areas

Graphic Scales

1" = 10' - 0"

0' 5' 10' 20'

General Notes

1. SEE CIVIL FOR DETAILS OF JOINTS IN CONC. PAVING, CONC. CURBS, CURB CUTS & CONC. APRONS.
2. KEEP CONSTRUCTION TRAFFIC OUT OF RESIDENTIAL STREETS AS MUCH AS POSSIBLE.
3. ALL EXPOSED EXTERIOR HANDRAILS, GUARDRAILS, & ACCESSORIES TO BE EPOXY PAINTED, TYP.
4. INSTALL NUT CAPS ON ALL THREADED BOLTS, TYP.
5. GRIND SMOOTH ALL WELDS, BONDO, PRIME & PAINT.
6. SEE LANDSCAPE PLAN FOR PROPOSED PLANTINGS
7. ALL EXTERIOR LIGHTING SHOWN IS PROPOSED

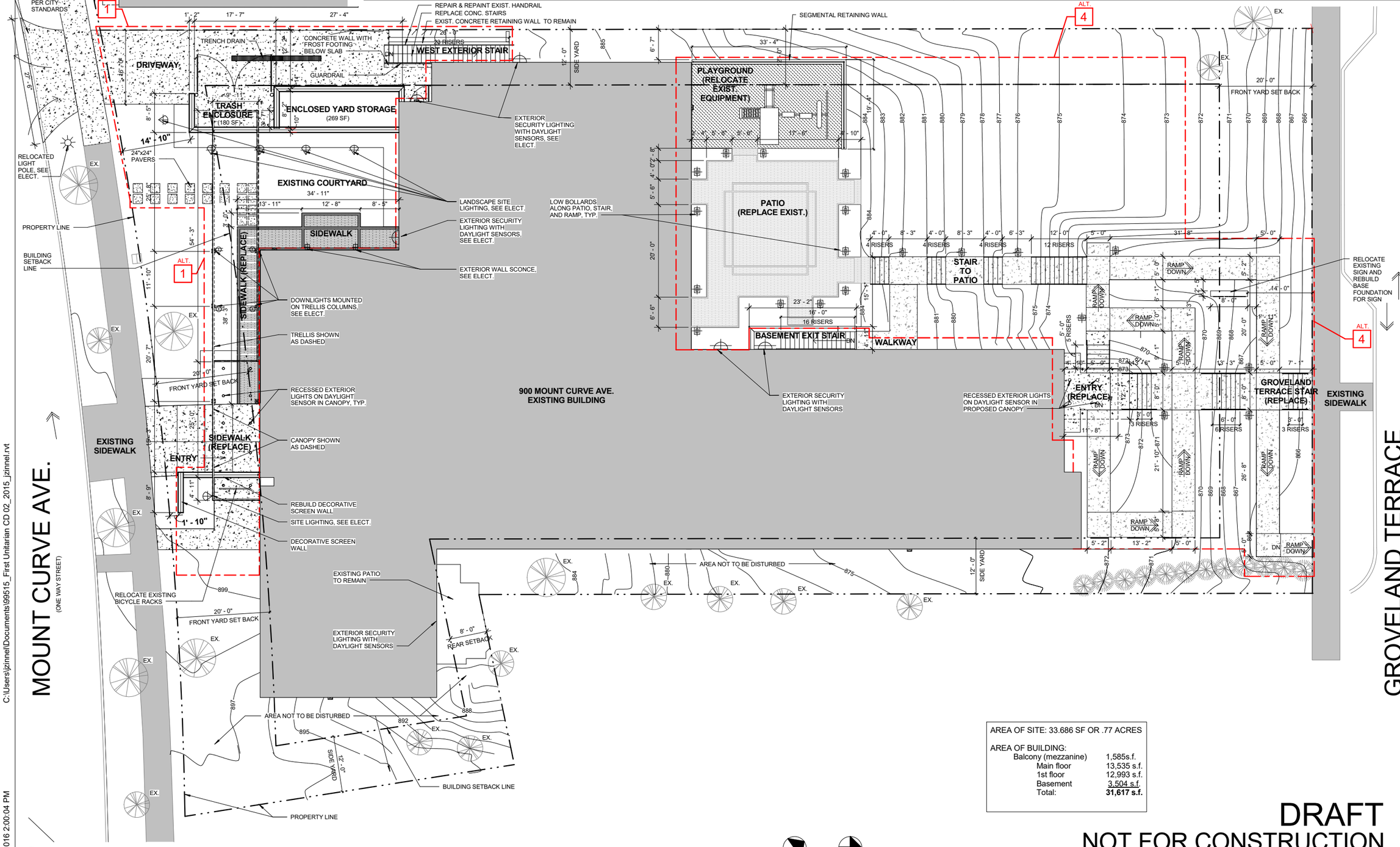

D1 / A0.1 SITE PLAN - ALT. 1 & 4
1" = 10'-0"

AREA OF SITE: 33.686 SF OR .77 ACRES	
AREA OF BUILDING:	
Balcony (mezzanine)	1,585s.f.
Main floor	13,535 s.f.
1st floor	12,993 s.f.
Basement	3,504 s.f.
Total:	**31,617 s.f.**

DRAFT
NOT FOR CONSTRUCTION

Kodet Architectural Group, Ltd. © 2016

I hereby certify that this plan, specification, or report was prepared by me or under my direct supervision, and that I am a duly Licensed Architect under the laws of the State of Minnesota.

Date: June 30, 2016
License Number: 10206
Architect Edward J. Kodet, Jr. - FAIA

©Kodet Architectural Group, Ltd.

Date: 7/15/16
Project No.: 99515
Drawn By: jjz
Checked By: jrb
Revisions:

Kodet Architectural Group Ltd.
15 Groveland Terrace • Minneapolis,MN 55403-1154
E-Mail arch@kodet.com • WebSite www.kodet.com
Telephone 612.377.2737 • Facsimile 612.377.1331

This above drawings, specifications and ideas, design and arrangements represented are and shall remain the property of the Architect, and no part shall be copied, disclosed to others, or used in connection with any other project for which they have been prepared and developed without the written permission of the Architect. Visual contact with these drawings or specifications shall constitute conclusive evidence of these restrictions.

First Unitarian Society of Minneapolis
Renovation
900 Mount Curve Ave
Minneapolis, MN 55403

A0.1
Site Plan

C:\Users\jzinnel\Documents\99515_First Unitarian CD 02_2015_jzinnel.rvt
7/14/2016 2:00:04 PM

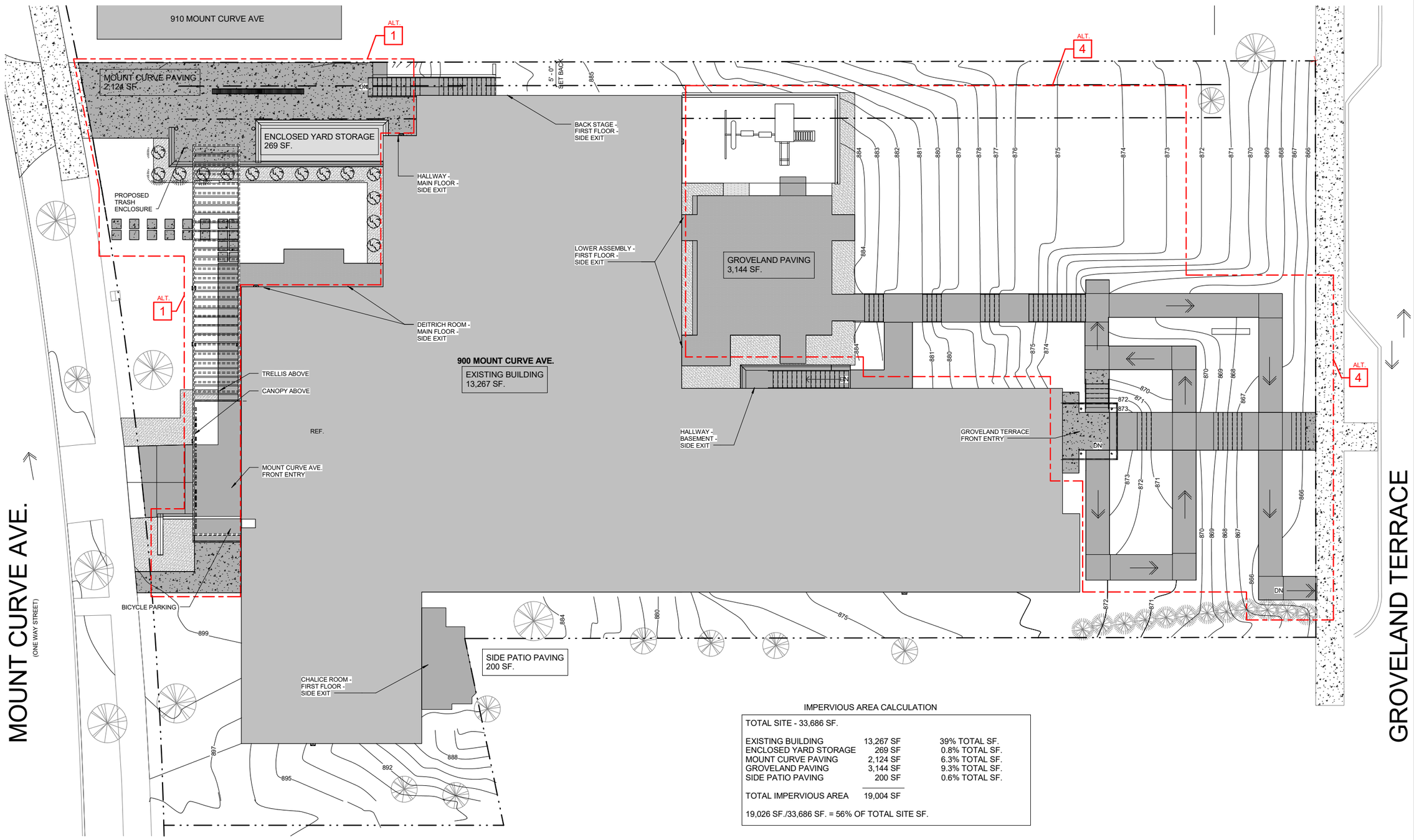

IMPERVIOUS AREA CALCULATION

TOTAL SITE - 33,686 SF.

EXISTING BUILDING	13,267 SF	39% TOTAL SF.
ENCLOSED YARD STORAGE	269 SF	0.8% TOTAL SF.
MOUNT CURVE PAVING	2,124 SF	6.3% TOTAL SF.
GROVELAND PAVING	3,144 SF	9.3% TOTAL SF.
SIDE PATIO PAVING	200 SF	0.6% TOTAL SF.
TOTAL IMPERVIOUS AREA	19,004 SF	

19,026 SF./33,686 SF. = 56% OF TOTAL SITE SF.

D1 / A00.3 IMPERVIOUS SITE PLAN
1" = 10'-0"

0' 5' 10' 20'

TRUE NORTH PLAN NORTH

DRAFT
NOT FOR CONSTRUCTION

Kodet Architectural Group, Ltd. © 2016

C:\Users\jzinnel\Documents\99515_First Unitarian CD 02_2015_jzinnel.rvt

7/14/2016 2:00:30 PM

I hereby certify that this plan, specification, or report was prepared by me or under my direct supervision, and that I am a duly Licensed Architect under the laws of the State of Minnesota.

Date June 30, 2016
License Number: 10206
Architect Edward J. Kodet, Jr. - FAIA

©Kodet Architectural Group, Ltd.

Date: 06/09/16
Project No.: 99515
Drawn By: KLK Checked By: Checker
Revisions:

Kodet Architectural Group Ltd.
15 Groveland Terrace • Minneapolis,MN 55403-1154
E-Mail arch@kodet.com • WebSite www.kodet.com
Telephone 612.377.2737 • Facsimile 612.377.1331

The above drawings, specifications and ideas, designs and arrangements represented are and shall remain the property of the Architect, and no part shall be copied, disclosed to others, or used in connection with any other project for which they have been prepared and developed without the written permission of the Architect. Visual contact with these drawings or specifications shall constitute conclusive evidence of these restrictions.

First Unitarian Society of Minneapolis
Renovation
900 Mount Curve Ave
Minneapolis, MN 55403

A00.3
Proposed Impervious Paving Plan

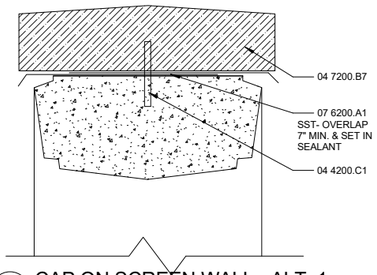

A1 / A0.4 CAP ON SCREEN WALL - ALT. 1
3" = 1'-0"

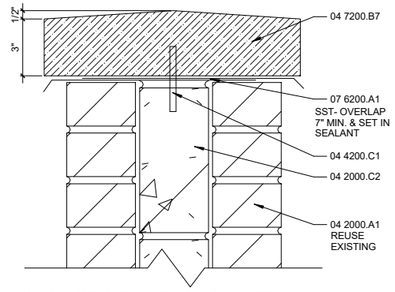

A2 / A0.4 CAST STONE CAP - ALT. 1
3" = 1'-0"

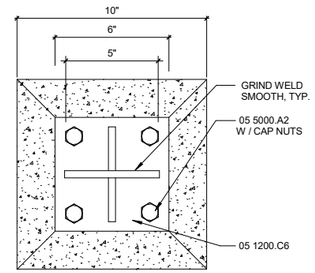

A3 / A0.4 COLUMN BASE PLAN VIEW - ALT. 1
3" = 1'-0"

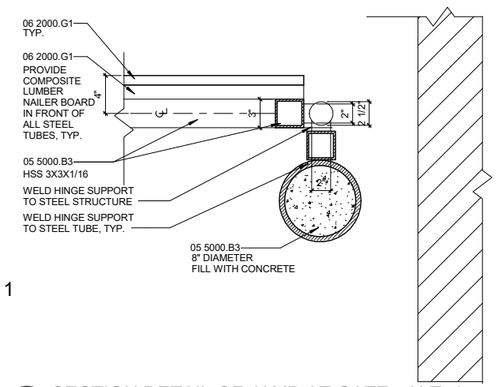

A4 / A0.4 SECTION DETAIL OF JAMB AT GATE - ALT. 1
1 1/2" = 1'-0"

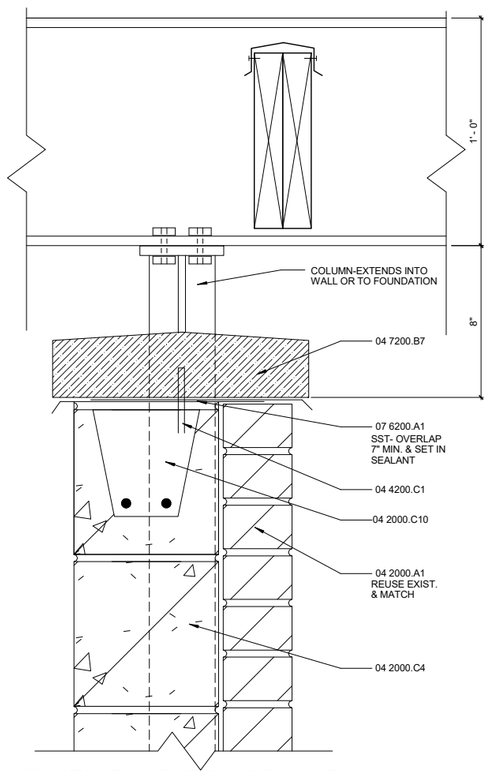

C1 / A0.4 STONE CAP AT CANOPY - ALT. 1
3" = 1'-0"

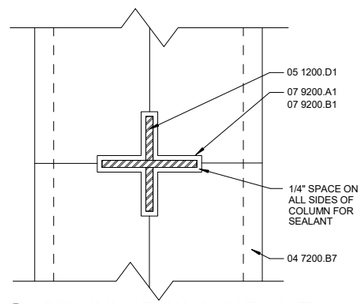

B2 / A0.4 COLUMN AT WALL CAP - ALT. 1
3" = 1'-0"

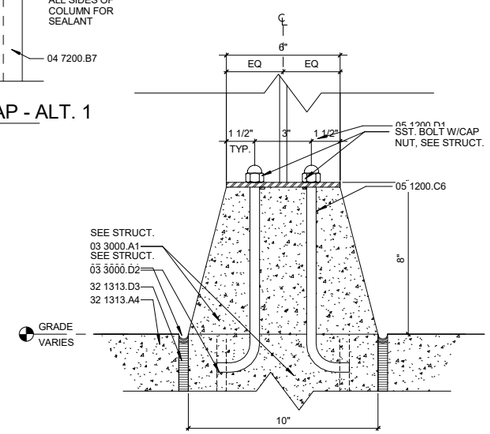

C2 / A0.4 COLUMN BASE SECTION - ALT. 1
3" = 1'-0"

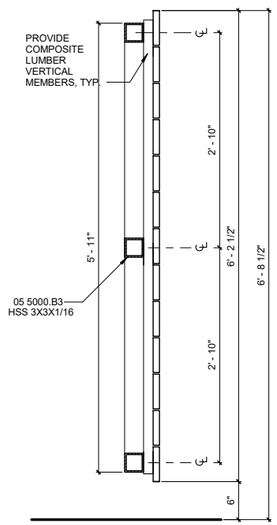

C3 / A0.4 GATE SECTION DETAIL - ALT. 1
1" = 1'-0"

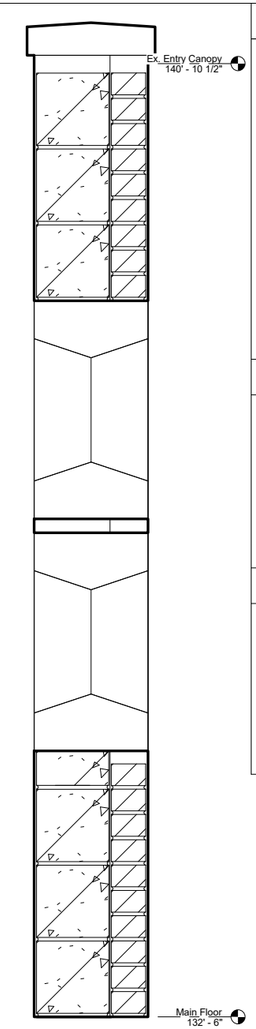

C4 / A0.4 ENTRY WALL SECTION - ALT. 1
1 1/2" = 1'-0"

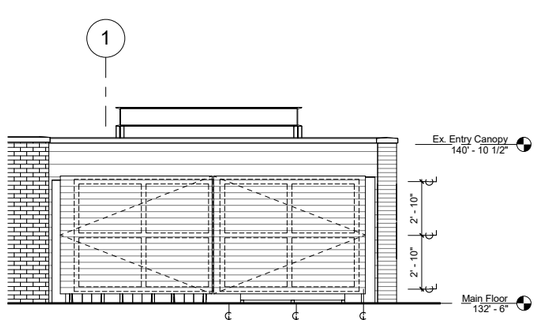

D1 / A0.4 DUMPSTER ENCLOSURE WEST ELEVATION - ALT. 1
1/4" = 1'-0"

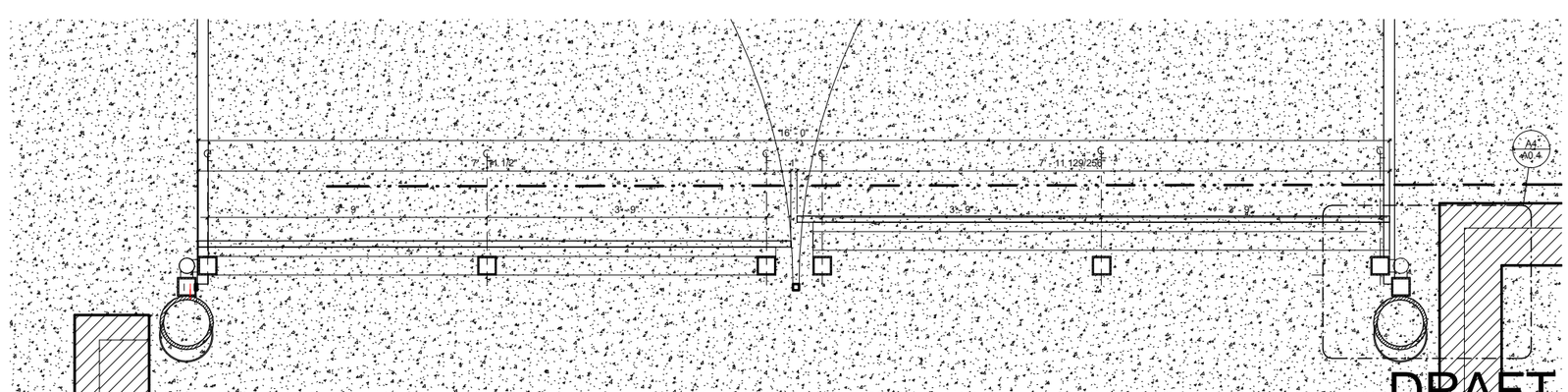

D2 / A0.4 ENLARGED PLAN AT GATE - ALT. 1
1" = 1'-0"

Material Keying Legend

03 3000.A1	C I P Concrete
03 3000.D2	Steel Reinforcement Rod
04 2000.A1	Face Brick
04 2000.C2	4" Concrete Block
04 2000.C4	8" Concrete Block
04 2000.C10	Concrete Block Bond Beam
04 4200.C1	Stainless Steel Stone Anchor
04 7200.B7	Cast Stone Wall Caps
05 1200.C6	Steel Plate
05 1200.D1	Steel Column, Architecturally Exposed Structural Steel
05 5000.A2	Anchor Bolt
05 5000.B3	Steel Tube
06 2000.G1	Plastic & Wood Composite Lumber
07 6200.A1	Metal Flashing
07 9200.A1	Sealant
07 9200.B1	Backer Rod
32 1313.A4	6" Concrete Slab
32 1313.D3	Expansion Joint Filler

General Notes

1. SEE CIVIL FOR DETAILS OF JOINTS IN CONC. PAVING, CONC. CURBS, CURB CUTS & CONC. APRONS.
2. KEEP CONSTRUCTION TRAFFIC OUT OF RESIDENTIAL STREETS AS MUCH AS POSSIBLE.
3. ALL EXPOSED EXTERIOR HANDRAILS, GUARDRAILS, & ACCESSORIES TO BE EPOXY PAINTED, TYP.
4. INSTALL NUT CAPS ON ALL THREADED BOLTS, TYP.
5. GRIND SMOOTH ALL WELDS, BONDO, PRIME & PAINT.
6. SEE LANDSCAPE PLAN FOR PROPOSED PLANTINGS
7. ALL EXTERIOR LIGHTING SHOWN IS PROPOSED

Graphic Scales

1/4" = 1' - 0" 0' 2' 4' 8'
1" = 1' - 0" 0' 6" 1' 2'
1-1/2" = 1' - 0" 0' 1' 2'
3" = 1' - 0" 0' 6" 1'

Date: 03/09/16
Project No.: 99515
Drawn By: kam
Checked By: Checker
Revisions:

I hereby certify that this plan, specification, or report was prepared by me or under my direct supervision, and that I am a duly Licensed Architect under the laws of the State of Minnesota.

Date June 30, 2016
Architect Edward J. Kodet, Jr., FAIA License Number: 10206

©Kodet Architectural Group, Ltd.

Kodet Architectural Group Ltd.
15 Groveland Terrace • Minneapolis,MN 55403-1154
E-Mail arch@kodet.com • WebSite www.kodet.com
Telephone 612.377.2737 • Facsimile 612.377.1331

The above drawings, specifications and ideas, design and arrangements represented are and shall remain the property of the Architect, and no part shall be copied, disclosed to others, or used in connection with any other project for which they have been prepared and developed without the written permission of the Architect. Visual contact with these drawings or specifications shall constitute conclusive evidence of these restrictions.

First Unitarian Society of Minneapolis
Renovation
900 Mount Curve Ave
Minneapolis, MN 55403

A0.4
Site Details
Alternate

DRAFT
NOT FOR CONSTRUCTION

Kodet Architectural Group, Ltd. © 2016

C:\Users\jzinnel\Documents\99515_First Unitarian CD 02_2015_jzinnel.rvt
7/14/2016 2:00:54 PM

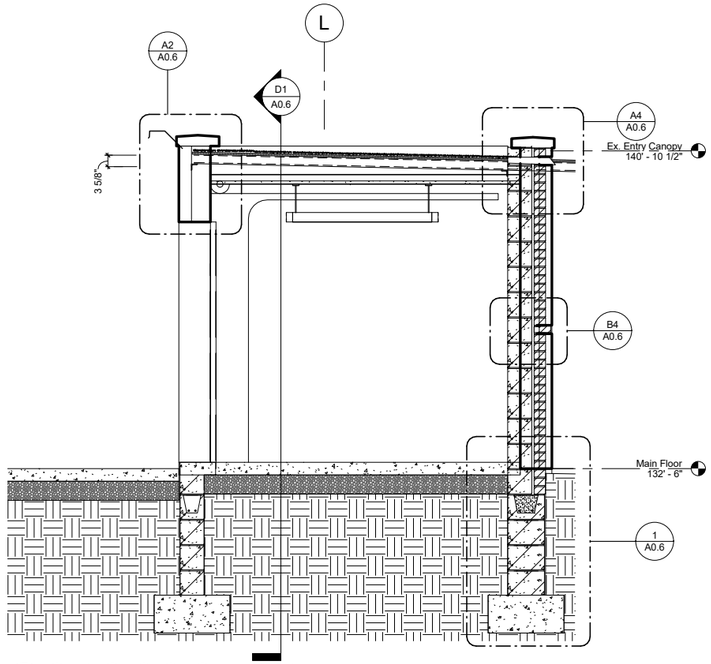

B1 A0.6 GARAGE SECTION - ALT. 1
1/2" = 1'-0"

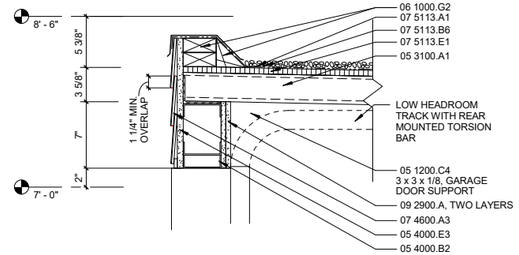

A2 A0.6 GARAGE DOOR DETAIL - ALT. 1
1 1/2" = 1'-0"

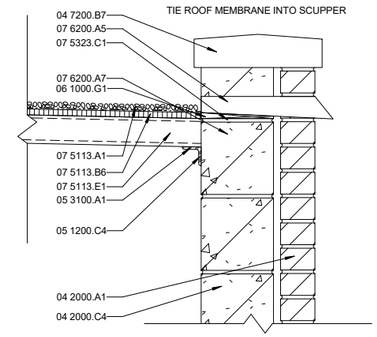

A4 A0.6 BRICK WALL SCUPPER DETAIL - ALT. 1
1 1/2" = 1'-0"

REVISE

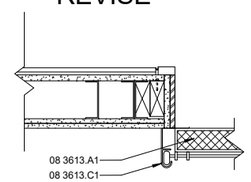

B2 A0.6 OVERHEAD JAMB DETAIL AT GARAGE DOOR - ALT. 1
1 1/2" = 1'-0"

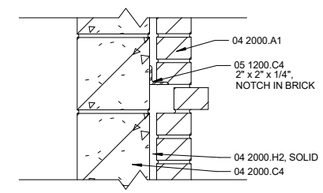

B4 A0.6 BRICK WALL OPENING DETAIL - ALT 1.
1 1/2" = 1'-0"

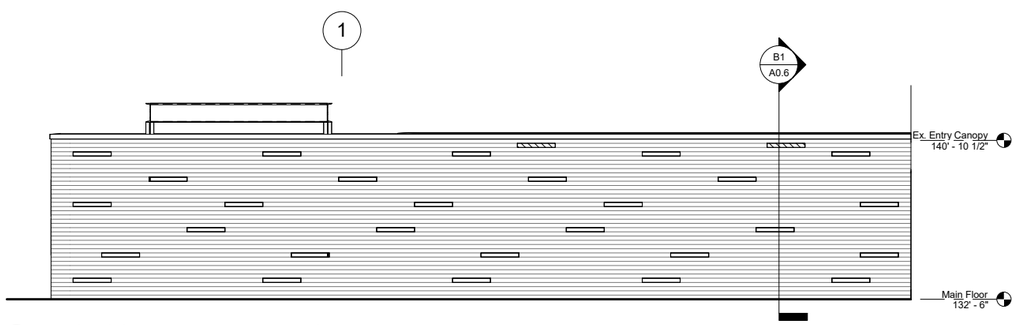

C1 A0.6 WEST COURTYARD ELEVATION - ALT. 1
1/4" = 1'-0"

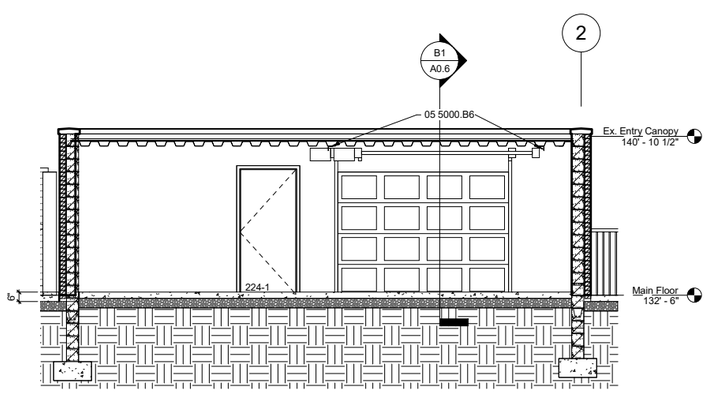

D1 A0.6 NORTH-SOUTH GARAGE SECTION - ALT. 1
1/4" = 1'-0"

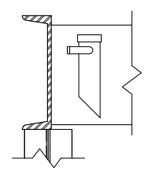

D2 A0.6 TRELLIS LIGHT DETAIL - ALT. 1
1 1/2" = 1'-0"

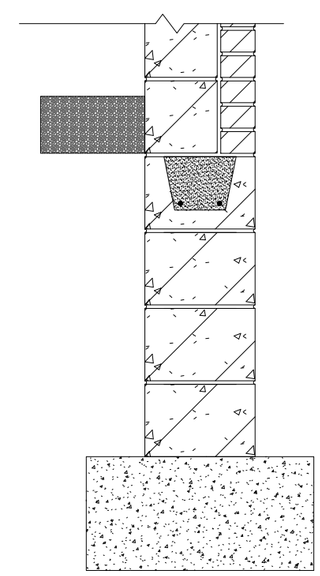

1 A0.6 GARAGE BASE DETAIL
1 1/2" = 1'-0"

Material Keying Legend

04 2000.A1	Face Brick
04 2000.C4	8" Concrete Block
04 2000.H2	Grout
04 7200.B7	Cast Stone Wall Caps
05 1200.C4	Steel Angle
05 3100.A1	Steel Roof Deck
05 4000.B2	4" Steel Stud
05 4000.E3	5/8" Gypsum Sheathing
05 5000.B6	Steel Angle
06 1000.G1	Wood Shim
06 1000.G2	Wood Blocking
07 4600.A3	Fiber Cement Board Siding
07 5113.A1	Built-Up Roofing System
07 5113.B6	Neoprene Flashing
07 5113.E1	Glass-Mat Gypsum Protection Board
07 5323.C1	EPDM Roofing Edge Sealant
07 6200.A5	Metal Scupper
07 6200.A7	Metal Gravel Stop
08 3613.A1	Steel Framed Sectional Overhead Door
08 3613.C1	Sectional Overhead Door Track
09 2900.A2	1/2" Gypsum Board

Graphic Scales

1/4" = 1' - 0" (0' 2' 4' 8')

1/2" = 1' - 0" (0' 1' 2' 4')

1-1/2" = 1' - 0" (0' 1' 2')

General Notes

1. SEE CIVIL FOR DETAILS OF JOINTS IN CONC. PAVING, CONC. CURBS, CURB CUTS & CONC. APRONS.
2. KEEP CONSTRUCTION TRAFFIC OUT OF RESIDENTIAL STREETS AS MUCH AS POSSIBLE.
3. ALL EXPOSED EXTERIOR HANDRAILS, GUARDRAILS, & ACCESSORIES TO BE EPOXY PAINTED, TYP.
4. INSTALL NUT CAPS ON ALL THREADED BOLTS, TYP.
5. GRIND SMOOTH ALL WELDS, BONDO, PRIME & PAINT.
6. SEE LANDSCAPE PLAN FOR PROPOSED PLANTINGS
7. ALL EXTERIOR LIGHTING SHOWN IS PROPOSED

DRAFT
NOT FOR CONSTRUCTION

Kodet Architectural Group, Ltd. © 2016

I hereby certify that this plan, specification, or report was prepared by me or under my direct supervision, and that I am a duly Licensed Architect under the laws of the State of Minnesota.

Date June 30, 2016
Architect Edward J. Kodet, Jr., FAIA License Number: 10206

© Kodet Architectural Group, Ltd.

Date: 04/29/16
Project No.: 99515
Drawn By: kam Checked By: ks
Revisions:

Kodet Architectural Group Ltd.
15 Groveland Terrace • Minneapolis,MN 55403-1154
E-Mail arch@kodet.com • WebSite www.kodet.com
Telephone 612.377.2737 • Facsimile 612.377.1331

The above drawings, specifications and ideas, design and arrangements represented are and shall remain the property of the Architect, and no part shall be copied, disclosed to others, or used in connection with any other project for which they have not been prepared and developed without the written permission of the Architect. Visual contact with these drawings or specifications shall constitute conclusive evidence of these restrictions.

First Unitarian Society of Minneapolis
Renovation
900 Mount Curve Ave
Minneapolis, MN 55403

A0.6
Site Details - Garage Alternate

C:\Users\jzinnel\Documents\99515_First Unitarian CD 02_2015_jzinnel.rvt
7/14/2016 2:01:06 PM

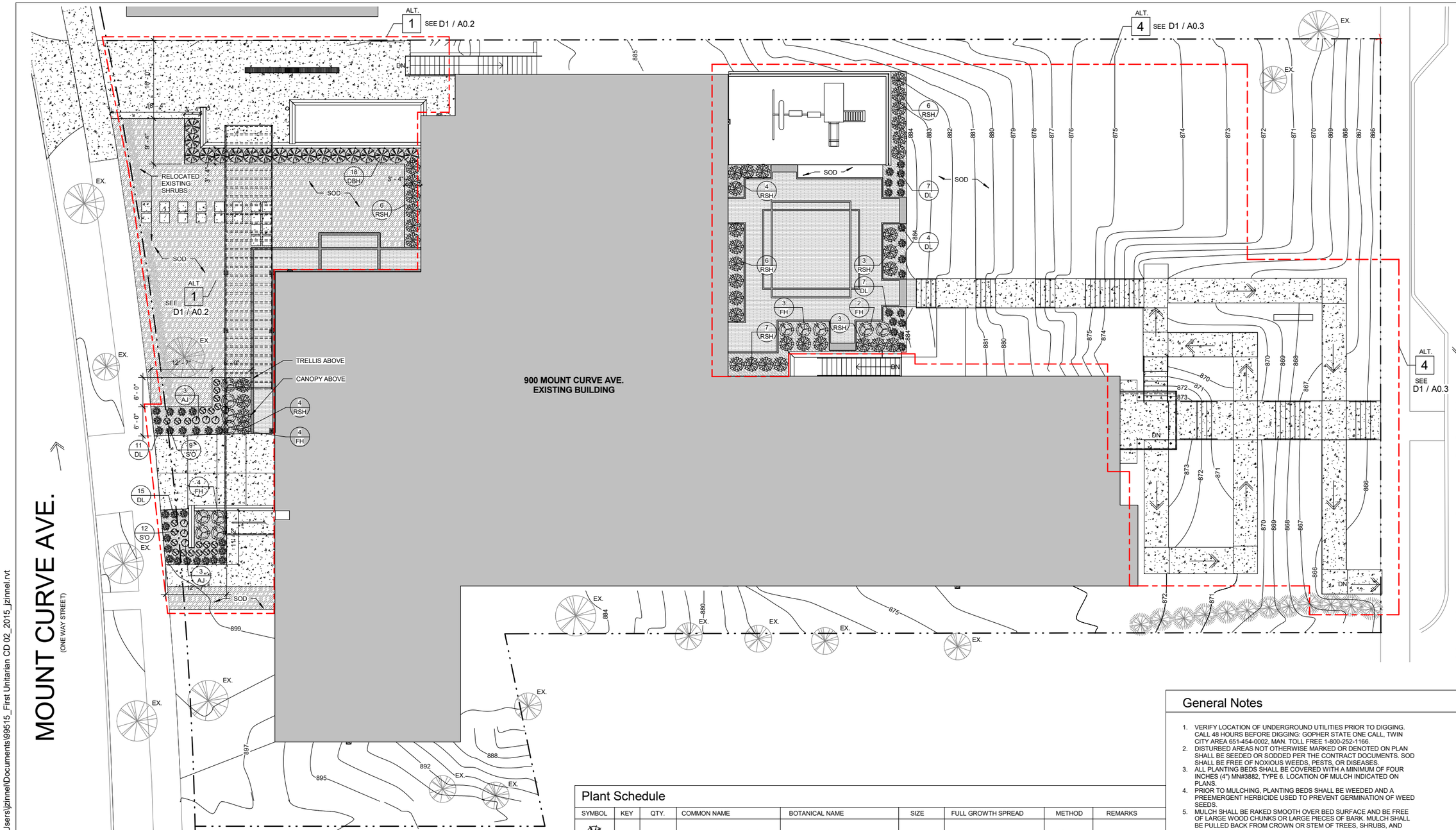

D1 / L0.1 LANDSCAPE PLAN - ALT. 1 & 4

1" = 10'-0"

Legend

BITUMINOUS	GRASS - AS REQUIRED IN DISTURBED AREAS
CONCRETE	PAVERS
EXIST. CONC.	MULCH

Plant Schedule

SYMBOL	KEY	QTY.	COMMON NAME	BOTANICAL NAME	SIZE	FULL GROWTH SPREAD	METHOD	REMARKS
	DBH	18	DWARF BUSH HONEYSUCKLE	DIERVILLA LONICERA	# 3	3'-0"	CONT.	-
	DL	44	MINI PEARL DAY LILLY RUBY STELLA DAY LILLY PANDORAS BOX DAY LILLY	HERMEROCALLIS HERMEROCALLIS HERMEROCALLIS	# 1	18" - 24" 18" - 24" 18" - 24"	CONT.	MIXED EQUALLY
	AJ	6	ARCADIA JUNIPER	J. SABINA ARCADIA	# 5	6'-0" - 8'-0"	CONT.	-
	S'O	21	STELLA DE ORO	H. STELLA DE ORO	# 1	18" - 24"	CONT.	-
	FH	13	FRANCEE HOSTA	HOSTA 'FRANCEE'	# 1	3'-0" - 4'-0"	2" O.C.	-
	RSH	39	REGAL SPLENDOR HOSTA	HOSTA 'REGAL SPLENDOR'	#1	3'-0"	2" O.C.	-
	EX. B	-	-	-	-	-	-	SALVAGE AND RELOCATE EXISTING

General Notes

1. VERIFY LOCATION OF UNDERGROUND UTILITIES PRIOR TO DIGGING. CALL 48 HOURS BEFORE DIGGING: GOPHER STATE ONE CALL, TWIN CITY AREA 651-454-0002, MAN. TOLL FREE 1-800-252-1166.
2. DISTURBED AREAS NOT OTHERWISE MARKED OR DENOTED ON PLAN SHALL BE SEEDED OR SODDED PER THE CONTRACT DOCUMENTS. SOD SHALL BE FREE OF NOXIOUS WEEDS, PESTS, OR DISEASES.
3. ALL PLANTING BEDS SHALL BE COVERED WITH A MINIMUM OF FOUR INCHES (4") MN#3882, TYPE 6. LOCATION OF MULCH INDICATED ON PLANS.
4. PRIOR TO MULCHING, PLANTING BEDS SHALL BE WEEDED AND A PREEMERGENT HERBICIDE USED TO PREVENT GERMINATION OF WEED SEEDS.
5. MULCH SHALL BE RAKED SMOOTH OVER BED SURFACE AND BE FREE OF LARGE WOOD CHUNKS OR LARGE PIECES OF BARK. MULCH SHALL BE PULLED BACK FROM CROWN OR STEM OF TREES, SHRUBS, AND GROUND COVERS SO AS NOT TO SMOTHER PLANTS.
6. DO NOT MAKE SUBSTITUTIONS WITHOUT APPROVAL FROM ARCHITECT.
7. PROTECT EXISTING TREES TO REMAIN FROM DAMAGE DURING CONSTRUCTION, TYP.
8. SEE GENERAL NOTES ON SHEET A0.2 FOR ADDITIONAL NOTES.
9. THE REMOVAL, PRUNING, AND/OR PLANTING OF TREES ON THE PUBLIC BOULEVARD REQUIRES A PERMIT FORM THE CITY FORESTER (651-632-5129). THERE IS NO CHARGE FOR THIS PERMIT.
10. FOR TREES PLANTED IN THE RIGHT-OF-WAY, REMOVE BURLAP AND ROPES FROM TOP 1/3RD OF ROOT BALL, CUT WIRE BASKET DOWN TO SECOND HORIZONTAL WIRE FROM THE BOTTOM, AND DISPOSE OF OFF-SITE.
11. INSTALL EROSION CONTROL DURING AND/OR AFTER GRADING ACTIVITIES UNTIL TURF AND/OR PLANTS ARE ESTABLISHED – SEE CIVIL FOR ADDITIONAL NOTES.
12. COORDINATE INSTALLATION OF TREES WITH EXISTING CONDITIONS.

DRAFT
NOT FOR CONSTRUCTION

Kodet Architectural Group, Ltd. © 2016

Kodet Architectural Group Ltd.
15 Groveland Terrace • Minneapolis,MN 55403-1154
E-Mail arch@kodet.com • WebSite www.kodet.com
Telephone 612.377.1331 • Facsimile 612.377.2737

Date: 06/29/16
Project No.: 99515
Drawn By: Author Checked By: Checker
Revisions:

I hereby certify that this plan, specification, or report was prepared by me or under my direct supervision, and that I am a duly Licensed Architect under the laws of the State of Minnesota.

Date June 30, 2016
Architect Edward J. Kodet, Jr. - FAIA License Number: 10206

©Kodet Architectural Group, Ltd.
The above drawings, specifications and ideas, designs and arrangements represented are and shall remain the property of the Architect, and no part shall be copied, disclosed to others, or used in connection with any other project for which they have been prepared and developed without the written permission of the Architect. Visual contact with these drawings or specifications shall constitute conclusive evidence of these restrictions.

First Unitarian Society of Minneapolis
Renovation
900 Mount Curve Ave
Minneapolis, MN 55403

L0.1
Landscape Plan

C:\Users\jzinnel\Documents\99515_First Unitarian CD 02_2015_jzinnel.rvt
7/14/2016 2:03:43 PM

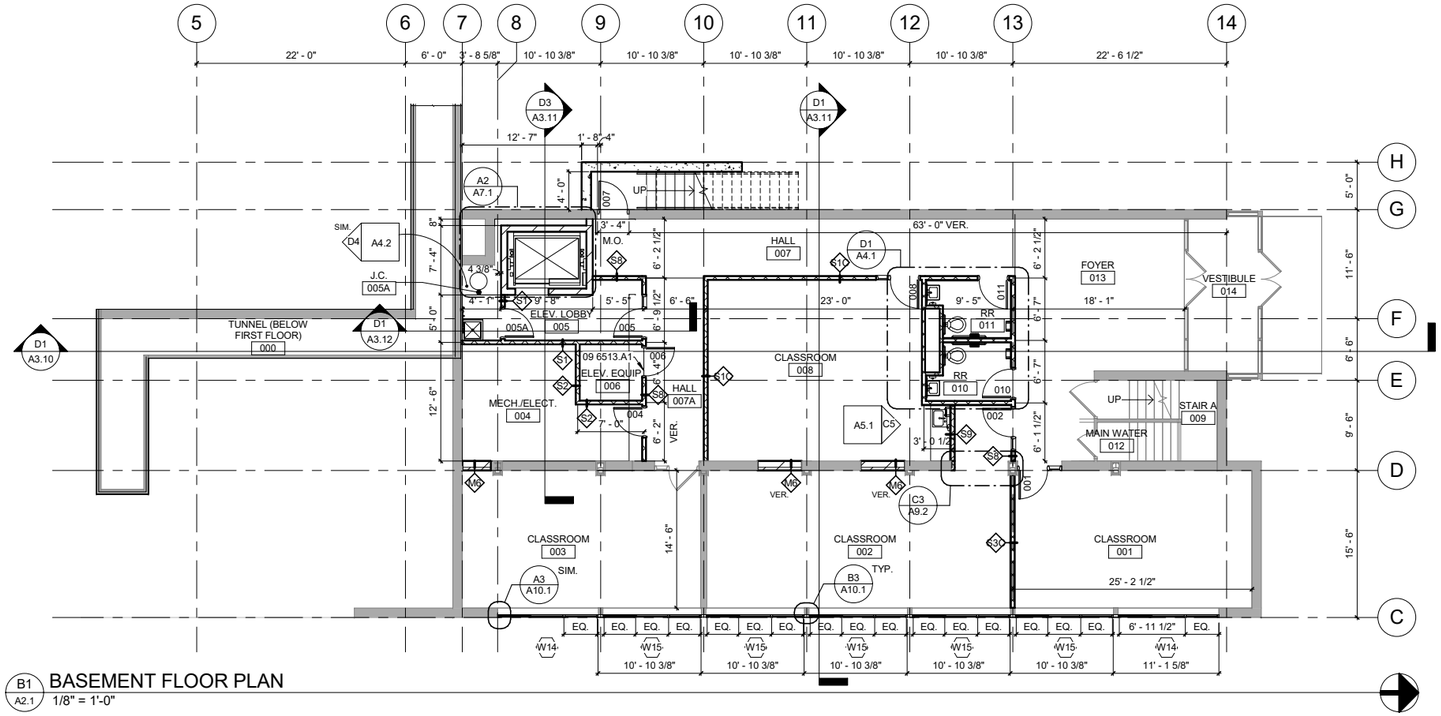

B1 A2.1 BASEMENT FLOOR PLAN
1/8" = 1'-0"

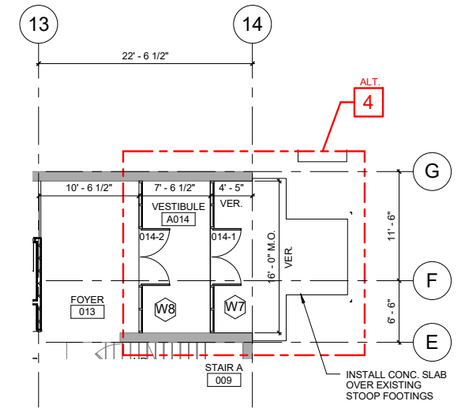

A4 A2.1 BASEMENT FLOOR PLAN - ALTERNATE 4
1/8" = 1'-0"

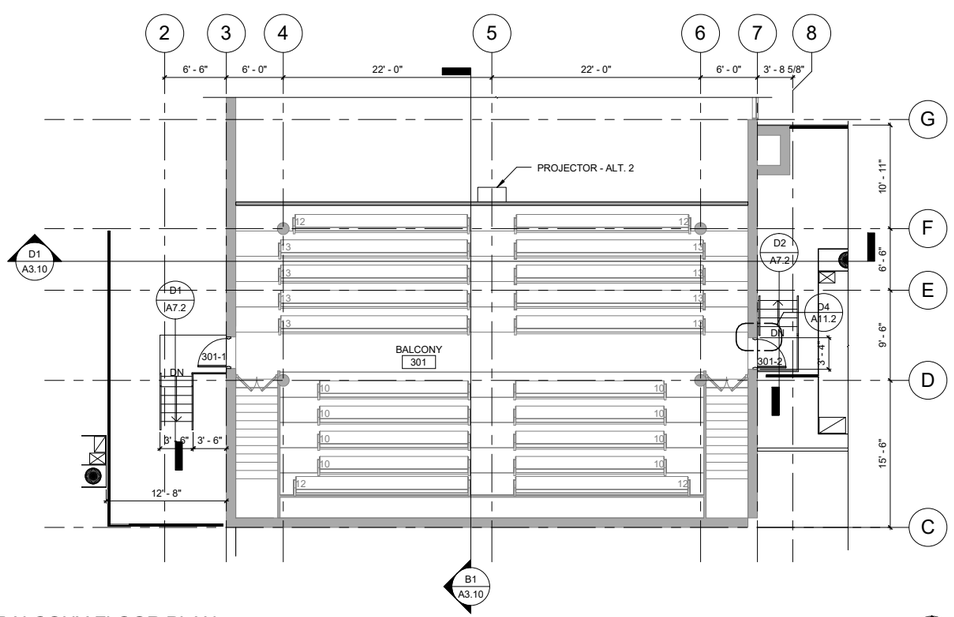

D1 A2.1 BALCONY FLOOR PLAN
1/8" = 1'-0"

General Notes

1. CONCRETE BLOCK DIMENSIONS ON FLOOR PLANS ARE NOMINAL AND TAKEN FROM FACE OF BLOCK.
2. AT EXISTING WALLS, DIMENSIONS ARE TAKEN FROM FACE OF EXISTING WALL SURFACE.
3. AT METAL STUD / GYPSUM BOARD PARTITIONS, DIMENSIONS ARE TAKEN FROM CENTERLINE OF STUD.
4. FOR PARTITION TYPES, SEE SHEET A8.4.
5. TRANSITIONS BETWEEN FLOOR MATERIALS TO BE LOCATED AT CENTERLINE OF DOOR BETWEEN ROOMS U.N.O.
6. ALL PENETRATIONS THROUGH FIRE-RATED WALLS ARE TO BE SEALED WITH FIRE RETARDANT SEALANT. ALL OTHER PENETRATIONS THROUGH OTHER WALLS TO BE SEALED COMPLETELY WITH SEALANT.
7. ALL CONDUIT IN EXPOSED CONCRETE BLOCK PARTITION TO BE CONCEALED.
8. COORDINATE PLUMBING WITHIN CONCRETE BLOCK, PRECAST, OR GYPSUM BOARD PARTITIONS AND FURRING.
9. CONTRACTOR SHALL PROVIDE (1) ADDITIONAL SURROUNDS 1'-4" WIDE BY 1'-0" DEEP PER FLOOR FOR MISC. PIPE/DUCT/COLUMN PENETRATIONS. UTILIZE PARTITION TYPE F4F.
10. SLOPE TILE FLOORS IN RESTROOMS WITH FLOOR DRAINS TO DRAIN AT 1/4"/FT. EXCEPT AT RESTROOMS IN EXISTING BUILDING.
11. SEE SPECIFICATION FOR LIST OF ALTERNATES

Graphic Scales

1/8" = 1' - 0" 0' 4' 8' 16'

DRAFT
NOT FOR CONSTRUCTION

Kodet Architectural Group, Ltd. © 2016

I hereby certify that this plan, specification, or report was prepared by me or under my direct supervision, and that I am a duly Licensed Architect under the laws of the State of Minnesota.

Architect: Edward J. Kodet, Jr. - FAIA Date: June 30, 2016
License Number: 10206

© Kodet Architectural Group, Ltd.

Date: 09/30/13
Project No.: 99515
Drawn By: dk / tln Checked By: Checker
Revisions:

Kodet Architectural Group Ltd.
15 Groveland Terrace • Minneapolis,MN 55403-1154
E-Mail arch@kodet.com • WebSite www.kodet.com
Telephone 612.377.2737 • Facsimile 612.377.1331

The above drawings, specifications and ideas, design and arrangements represented are and shall remain the property of the Architect, and no part shall be copied, disclosed to others, or used in connection with any other project for which they have been prepared and developed without the written permission of the Architect. Visual contact with these drawings or specifications shall constitute conclusive evidence of these restrictions.

First Unitarian Society of Minneapolis
Renovation
900 Mount Curve Ave
Minneapolis, MN 55403

A2.1
Basement and Balcony Floor Plan

C:\Users\jzinnel\Documents\99515_First Unitarian CD 02_2015_jzinnel.rvt
7/14/2016 2:01:12 PM

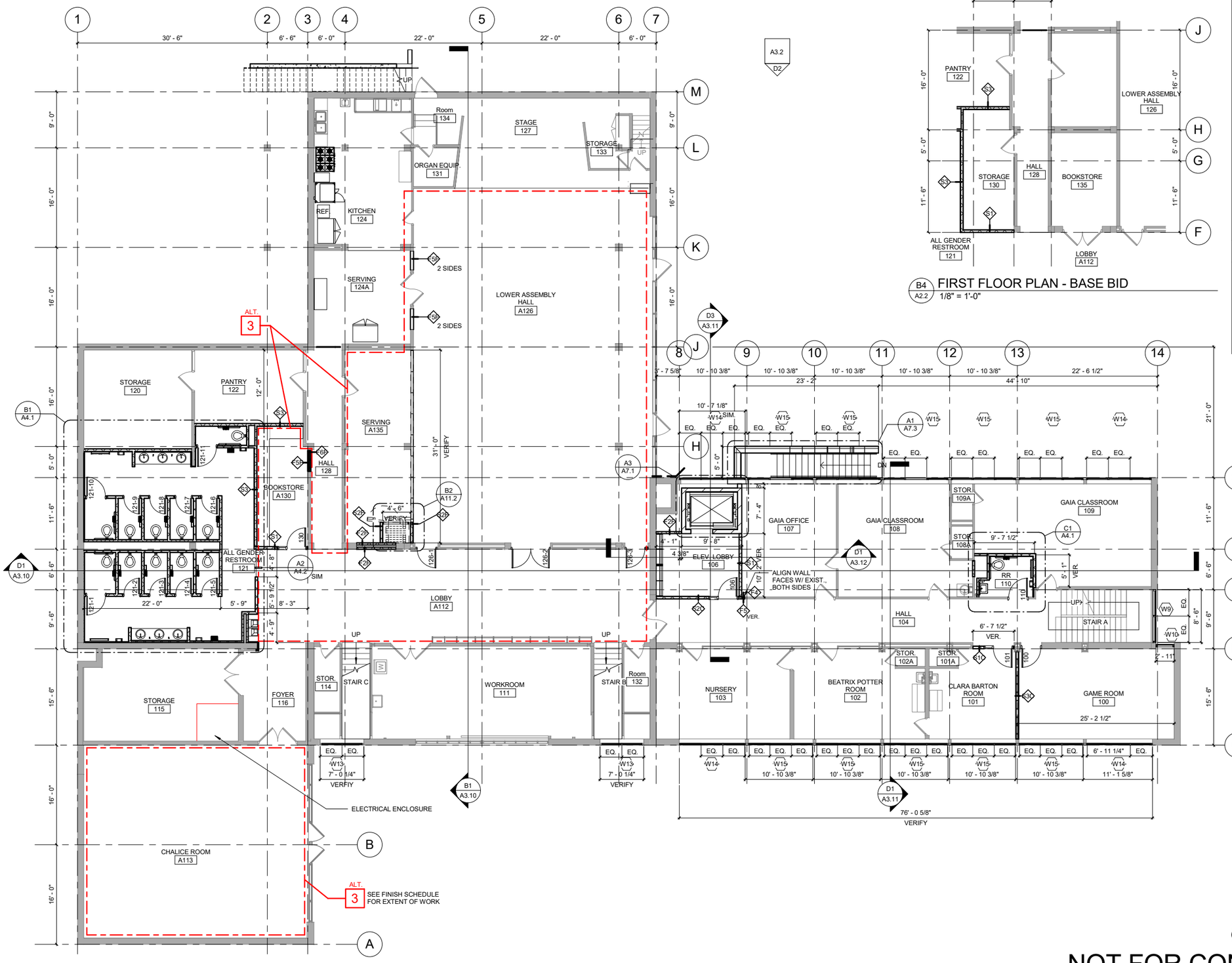

D1 A2.2 FIRST FLOOR PLAN - ALT. 3
1/8" = 1'-0"

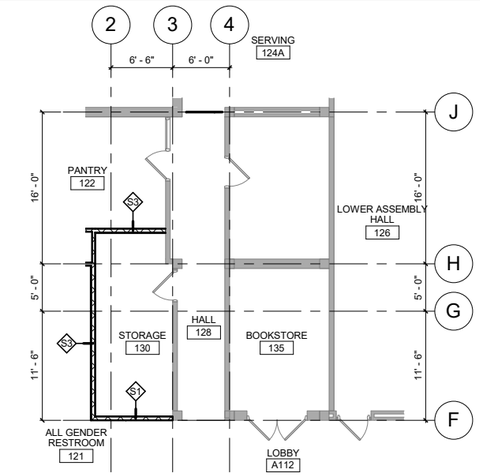

B4 A2.2 FIRST FLOOR PLAN - BASE BID
1/8" = 1'-0"

General Notes

1. CONCRETE BLOCK DIMENSIONS ON FLOOR PLANS ARE NOMINAL AND TAKEN FROM FACE OF BLOCK.
2. AT EXISTING WALLS, DIMENSIONS ARE TAKEN FROM FACE OF EXISTING WALL SURFACE.
3. AT METAL STUD / GYPSUM BOARD PARTITIONS, DIMENSIONS ARE TAKEN FROM CENTERLINE OF STUD.
4. FOR PARTITION TYPES, SEE SHEET A8.4.
5. TRANSITIONS BETWEEN FLOOR MATERIALS TO BE LOCATED AT CENTERLINE OF DOOR BETWEEN ROOMS U.N.O.
6. ALL PENETRATIONS THROUGH FIRE-RATED WALLS ARE TO BE SEALED WITH FIRE RETARDANT SEALANT. ALL OTHER PENETRATIONS THROUGH OTHER WALLS TO BE SEALED COMPLETELY WITH SEALANT.
7. ALL CONDUIT IN EXPOSED CONCRETE BLOCK PARTITION TO BE CONCEALED.
8. COORDINATE PLUMBING WITHIN CONCRETE BLOCK, PRECAST, OR GYPSUM BOARD PARTITIONS AND FURRING.
9. CONTRACTOR SHALL PROVIDE (1) ADDITIONAL SURROUNDS 1'-4" WIDE BY 1'-0" DEEP PER FLOOR FOR MISC. PIPE/DUCT/COLUMN PENETRATIONS. UTILIZE PARTITION TYPE F4F.
10. SLOPE TILE FLOORS IN RESTROOMS WITH FLOOR DRAINS TO DRAIN AT 1/4"/FT. EXCEPT AT RESTROOMS IN EXISTING BUILDING.
11. SEE SPECIFICATION FOR LIST OF ALTERNATES

Graphic Scales

1/8" = 1' - 0" 0' 4' 8' 16'

DRAFT
NOT FOR CONSTRUCTION

Kodet Architectural Group, Ltd. © 2016

I hereby certify that this plan, specification, or report was prepared by me or under my direct supervision, and that I am a duly Licensed Architect under the laws of the State of Minnesota.

Architect Edward J. Kodet, Jr. - FAIA Date June 30, 2016 License Number: 10206

©Kodet Architectural Group, Ltd.

Date: 12/14/15
Project No.: 99515
Drawn By: tln Checked By: Checker
Revisions:

Kodet Architectural Group Ltd.
15 Groveland Terrace • Minneapolis,MN 55403-1154
E-Mail arch@kodet.com • WebSite www.kodet.com
Telephone 612.377.2737 • Facsimile 612.377.1331

The above drawings, specifications and ideas, designs and arrangements represented are and shall remain the property of the Architect, and no part shall be copied, disclosed to others, or used in connection with any other project for which they have been prepared and developed without the written permission of the Architect. Visual contact with these drawings or specifications shall constitute conclusive evidence of these restrictions.

First Unitarian Society of Minneapolis
Renovation
900 Mount Curve Ave
Minneapolis, MN 55403

A2.2
First Floor Plan

C:\Users\jzinnel\Documents\99515_First Unitarian CD 02_2015_jzinnel.rvt
7/14/2016 2:01:22 PM

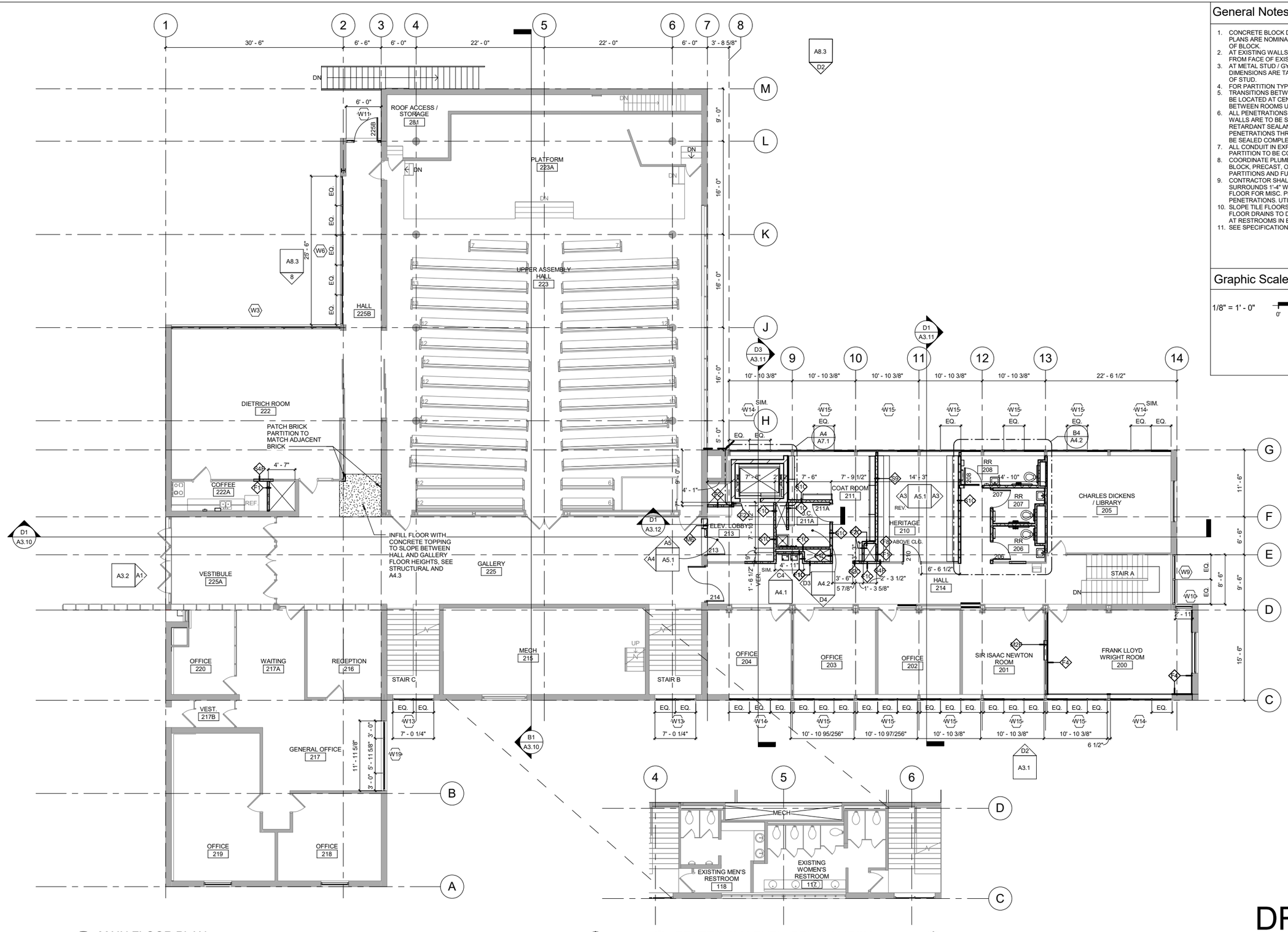

D1 A2.3 MAIN FLOOR PLAN
1/8" = 1'-0"

D3 A2.3 RESTROOM LEVEL (BELOW MECH)
1/8" = 1'-0"

General Notes

1. CONCRETE BLOCK DIMENSIONS ON FLOOR PLANS ARE NOMINAL AND TAKEN FROM FACE OF BLOCK.
2. AT EXISTING WALLS, DIMENSIONS ARE TAKEN FROM FACE OF EXISTING WALL SURFACE.
3. AT METAL STUD / GYPSUM BOARD PARTITIONS, DIMENSIONS ARE TAKEN FROM CENTERLINE OF STUD.
4. FOR PARTITION TYPES, SEE SHEET A8.4.
5. TRANSITIONS BETWEEN FLOOR MATERIALS TO BE LOCATED AT CENTERLINE OF DOOR BETWEEN ROOMS U.N.O.
6. ALL PENETRATIONS THROUGH FIRE-RATED WALLS ARE TO BE SEALED WITH FIRE RETARDANT SEALANT. ALL OTHER PENETRATIONS THROUGH OTHER WALLS TO BE SEALED COMPLETELY WITH SEALANT.
7. ALL CONDUIT IN EXPOSED CONCRETE BLOCK PARTITION TO BE CONCEALED.
8. COORDINATE PLUMBING WITHIN CONCRETE BLOCK, PRECAST, OR GYPSUM BOARD PARTITIONS AND FURRING.
9. CONTRACTOR SHALL PROVIDE (1) ADDITIONAL SURROUNDS 1'-4" WIDE BY 1'-0" DEEP PER FLOOR FOR MISC. PIPE/DUCT/COLUMN PENETRATIONS. UTILIZE PARTITION TYPE F4F.
10. SLOPE TILE FLOORS IN RESTROOMS WITH FLOOR DRAINS TO DRAIN AT 1/4"/FT. EXCEPT AT RESTROOMS IN EXISTING BUILDING.
11. SEE SPECIFICATION FOR LIST OF ALTERNATES

Graphic Scales

1/8" = 1' - 0" 0' 4' 8' 16'

DRAFT
NOT FOR CONSTRUCTION

Kodet Architectural Group, Ltd. © 2016

I hereby certify that this plan, specification, or report was prepared by me or under my direct supervision, and that I am a duly Licensed Architect under the laws of the State of Minnesota.

Architect Edward J. Kodet, Jr. - FAIA Date: June 30, 2016 License Number: 10206

©Kodet Architectural Group, Ltd.

Date: 11/18/15
Project No.: 99515
Drawn By: dk Checked By: Checker
Revisions:

Kodet Architectural Group Ltd.
15 Groveland Terrace • Minneapolis,MN 55403-1154
E-Mail arch@kodet.com • WebSite www.kodet.com
Telephone 612.377.2737 • Facsimile 612.377.1331

This above drawings, specifications and ideas, design and arrangements represented are and shall remain the property of the Architect, and no part shall be copied, disclosed to others, or used in connection with any other project for which they have been prepared and developed without the written permission of the Architect. Visual contact with these drawings or specifications shall constitute conclusive evidence of these restrictions.

First Unitarian Society of Minneapolis
Renovation
900 Mount Curve Ave
Minneapolis, MN 55403

A2.3
Main Floor Plan

C:\Users\jzinnel\Documents\99515_First Unitarian CD 02_2015_jzinnel.rvt

7/14/2016 2:01:26 PM

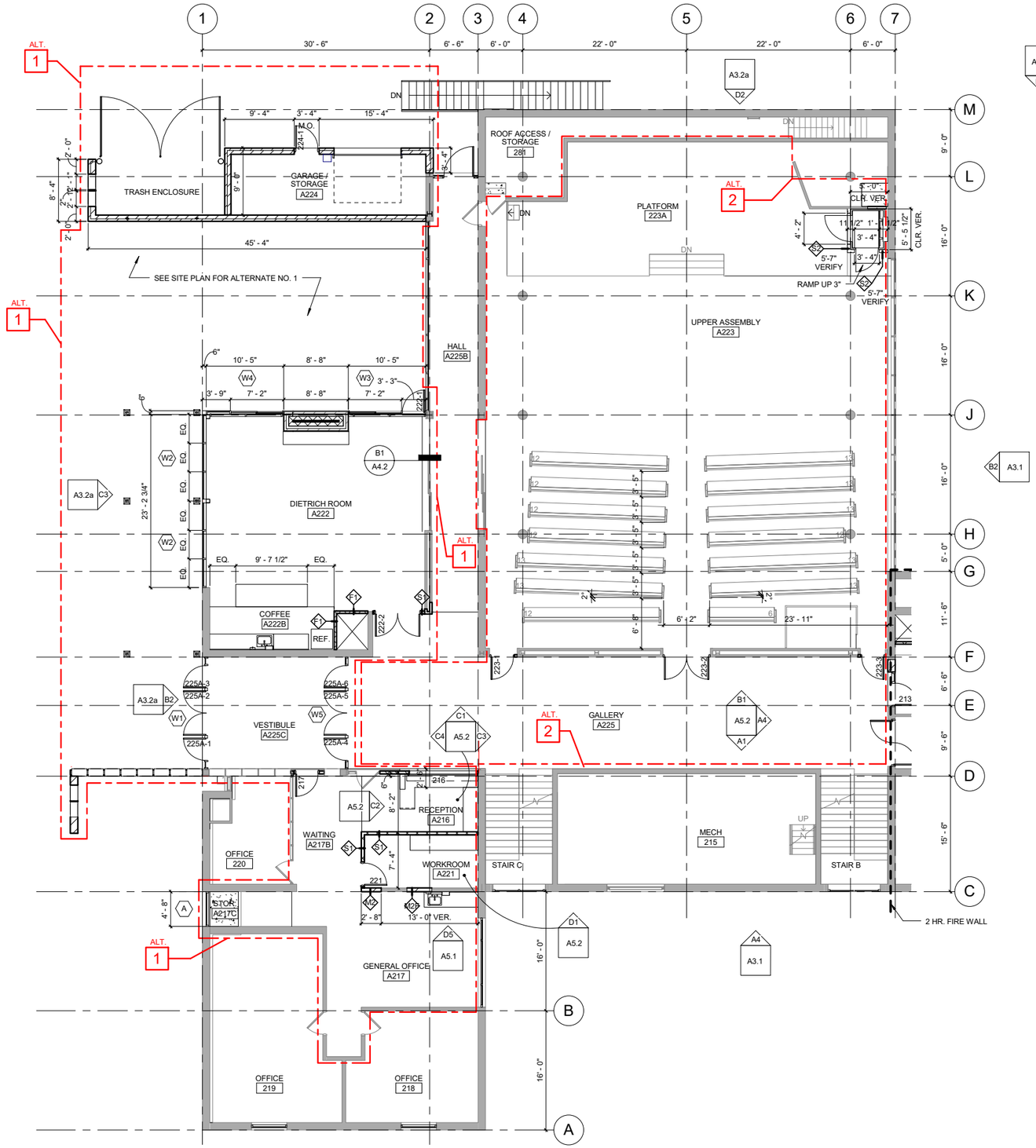

D1 A2.3a MAIN FLOOR PLAN - ALT. 1 & 2
1/8" = 1'-0"

General Notes

1. CONCRETE BLOCK DIMENSIONS ON FLOOR PLANS ARE NOMINAL AND TAKEN FROM FACE OF BLOCK.
2. AT EXISTING WALLS, DIMENSIONS ARE TAKEN FROM FACE OF EXISTING WALL SURFACE.
3. AT METAL STUD / GYPSUM BOARD PARTITIONS, DIMENSIONS ARE TAKEN FROM CENTERLINE OF STUD.
4. FOR PARTITION TYPES, SEE SHEET A8.4.
5. TRANSITIONS BETWEEN FLOOR MATERIALS TO BE LOCATED AT CENTERLINE OF DOOR BETWEEN ROOMS U.N.O.
6. ALL PENETRATIONS THROUGH FIRE-RATED WALLS ARE TO BE SEALED WITH FIRE RETARDANT SEALANT. ALL OTHER PENETRATIONS THROUGH OTHER WALLS TO BE SEALED COMPLETELY WITH SEALANT.
7. ALL CONDUIT IN EXPOSED CONCRETE BLOCK PARTITION TO BE CONCEALED.
8. COORDINATE PLUMBING WITHIN CONCRETE BLOCK, PRECAST, OR GYPSUM BOARD PARTITIONS AND FURRING.
9. CONTRACTOR SHALL PROVIDE (1) ADDITIONAL SURROUNDS 1'-4" WIDE BY 1'-0" DEEP PER FLOOR FOR MISC. PIPE/DUCT/COLUMN PENETRATIONS. UTILIZE PARTITION TYPE F4F.
10. SLOPE TILE FLOORS IN RESTROOMS WITH FLOOR DRAINS TO DRAIN AT 1/4"/FT. EXCEPT AT RESTROOMS IN EXISTING BUILDING.
11. SEE SPECIFICATION FOR LIST OF ALTERNATES

Graphic Scales

1/8" = 1' - 0" 0' 4' 8' 16'

DRAFT
NOT FOR CONSTRUCTION

Kodet Architectural Group, Ltd. © 2016

I hereby certify that this plan, specification, or report was prepared by me or under my direct supervision, and that I am a duly Licensed Architect under the laws of the State of Minnesota.

Architect Edward J. Kodet, Jr. - FAIA Date June 30, 2016 License Number: 10206

©Kodet Architectural Group, Ltd.

Date: 06/01/16
Project No.: 99515
Drawn By: Author Checked By: Checker
Revisions:

Kodet Architectural Group Ltd.
15 Groveland Terrace • Minneapolis,MN 55403-1154
E:Mail arch@kodet.com • WebSite www.kodet.com
Telephone 612.377.2737 • Facsimile 612.377.1331

The above drawings, specifications and ideas, design and arrangements represented are and shall remain the property of the Architect, and no part shall be copied, disclosed to others, or used in connection with any other project for which they have been prepared and developed without the written permission of the Architect. Visual contact with these drawings or specifications shall constitute conclusive evidence of these restrictions.

First Unitarian Society of Minneapolis
Renovation
900 Mount Curve Ave
Minneapolis, MN 55403

A2.3a
Main Floor Plan Alternates

C:\Users\jzinnel\Documents\99515_First Unitarian CD 02_2015_jzinnel.rvt
7/14/2016 2:01:28 PM

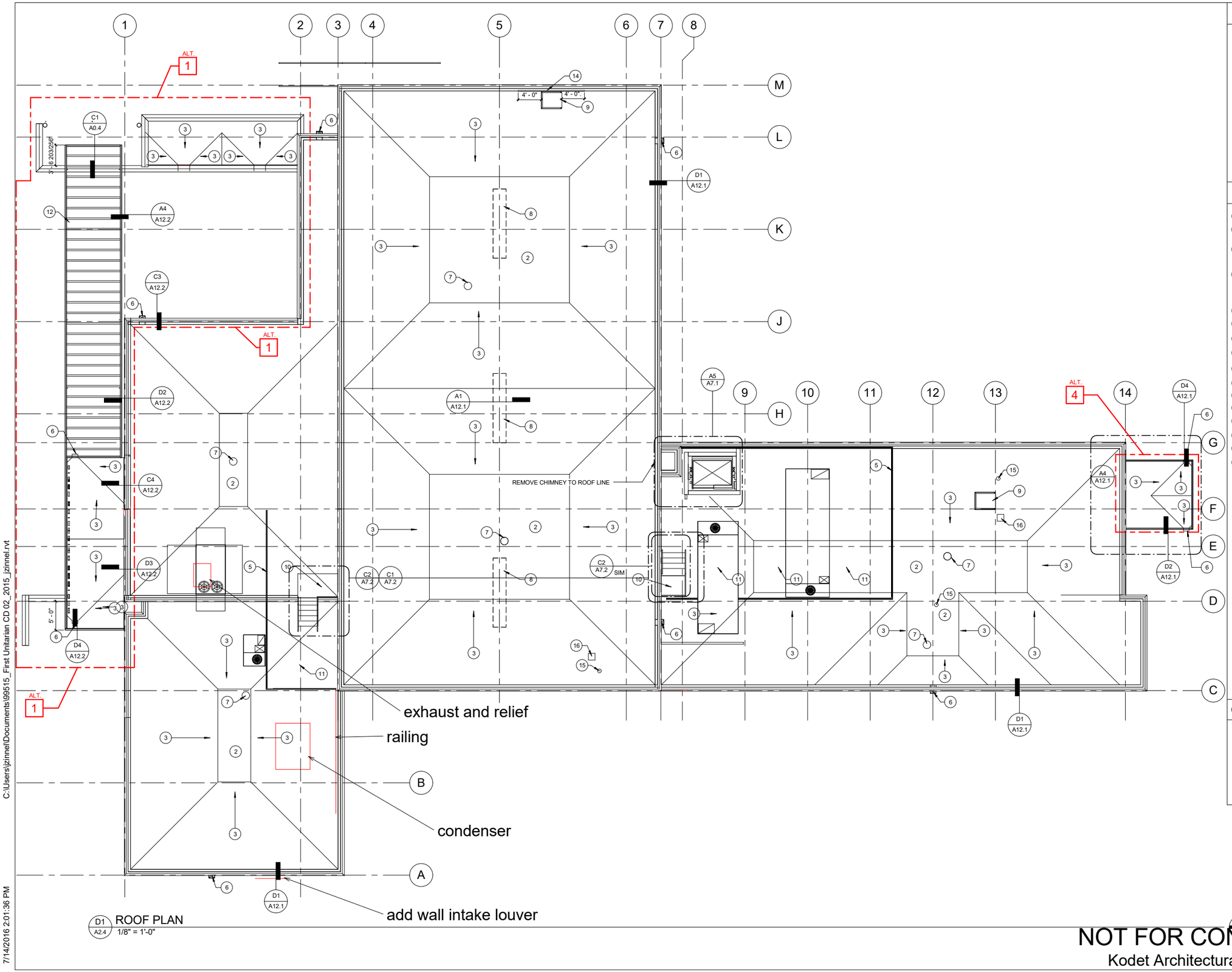

D1 A2.4 ROOF PLAN
1/8" = 1'-0"

DRAFT
NOT FOR CONSTRUCTION

Kodet Architectural Group, Ltd. © 2016

General Notes

1. PROVIDE TAPERED INSULATION TO MAINTAIN 1/4" PER FOOT POSITIVE DRAINAGE AT ALL ROOF AREAS.
2. PROVIDE CRICKETS USING TAPERED INSULATION AT ALL ROOF PENETRATIONS TO PROVIDE POSITIVE DRAINAGE, TYPICAL.
3. SEE MECH. AND ELEC. FOR ROOF PENETRATIONS AND PIPING.
4. INDICATION AT ROOF DRAIN THUS x" INDICATES OVERALL THICKNESS OF ROOF INSULATION AT ROOF DRAIN.
5. SEE A12.1 FOR TYPICAL ROOF DETAILS.
6. VERIFY CONDITIONS NOTED AS EXISTING AND NOTIFY ARCHITECT IMMEDIATELY OF ANY DISCREPANCIES.
7. PROTECT EXISTING MATERIALS TO REMAIN FROM DAMAGE, U.N.O., TYP.
8. STEEL TUBES FOR ROOF SCREEN WALLS TO EXTEND DOWN AND BE FASTENED TO METAL ROOF DECKING. ALIGN WITH ROOF STRUCTURE BELOW DECKING, TYP. SEE STRUCTURAL.

Key Notes

1. NOT USED
2. BASE INSULATION ONLY, NO SLOPE
3. BASE INSULATION PLUS TAPERED INSULATION SLOPED DOWN AT 1/8" PER FOOT OVER FLAT STRUCTURE.
4. CONCRETE WALKWAY PAVERS OVER FLEXIBLE WALKWAY MATERIAL. WALKWAYS SHALL BE MINIMUM 2'-0" WIDE. WALKWAY PAVERS AROUND ROOF HATCH AND RTU'S SHALL BE MINIMUM 4'-0" WIDE, U.N.O.
5. SCREEN WALL FOR MECH. UNITS. SEE DETAILS.
6. SCUPPER
7. EXISTING ROOF DRAIN
8. REMOVE EXISTING VENTILATORS & FILL ROOF OPENINGS
9. EXISTING ROOF ACCESS HATCH
10. ROOF STAIRS-SEE C3 / A7.2
11. ROOF TOP HVAC UNIT
12. TRELLIS-SEE A4 / A12.2
13. EXISTING OVERFLOW SCUPPER
14. INSTALL GUARD RAIL @ ROOF HATCH
15. PLUMBING VENT
16. VENT THROUGH ROOF

Graphic Scales

1/8" = 1' - 0" 0' 4' 8' 16'

I hereby certify that this plan, specification, or report was prepared by me or under my direct supervision, and that I am a duly Licensed Architect under the laws of the State of Minnesota.

Date: June 30, 2016
Architect Edward J. Kodet, Jr., FAIA License Number: 10206

©Kodet Architectural Group, Ltd.
The above drawings, specifications and ideas, design and arrangements represented are and shall remain the property of the Architect, and no part shall be copied, disclosed to others, or used in connection with any other project for which they have been prepared and developed without the written permission of the Architect. Visual contact with these drawings or specifications shall constitute conclusive evidence of these restrictions.

Date: 09/30/13
Project No.: 99515
Drawn By: DK/KP Checked By: RN
Revisions:

Kodet Architectural Group Ltd.
15 Groveland Terrace • Minneapolis,MN 55403-1154
E-Mail arch@kodet.com • WebSite www.kodet.com
Telephone 612.377.2737 • Facsimile 612.377.1331

First Unitarian Society of Minneapolis
Renovation
900 Mount Curve Ave
Minneapolis, MN 55403

A2.4
Roof Plan

C:\Users\jzinnel\Documents\99515_First Unitarian CD 02_2015_jzinnel.rvt
7/14/2016 2:01:36 PM

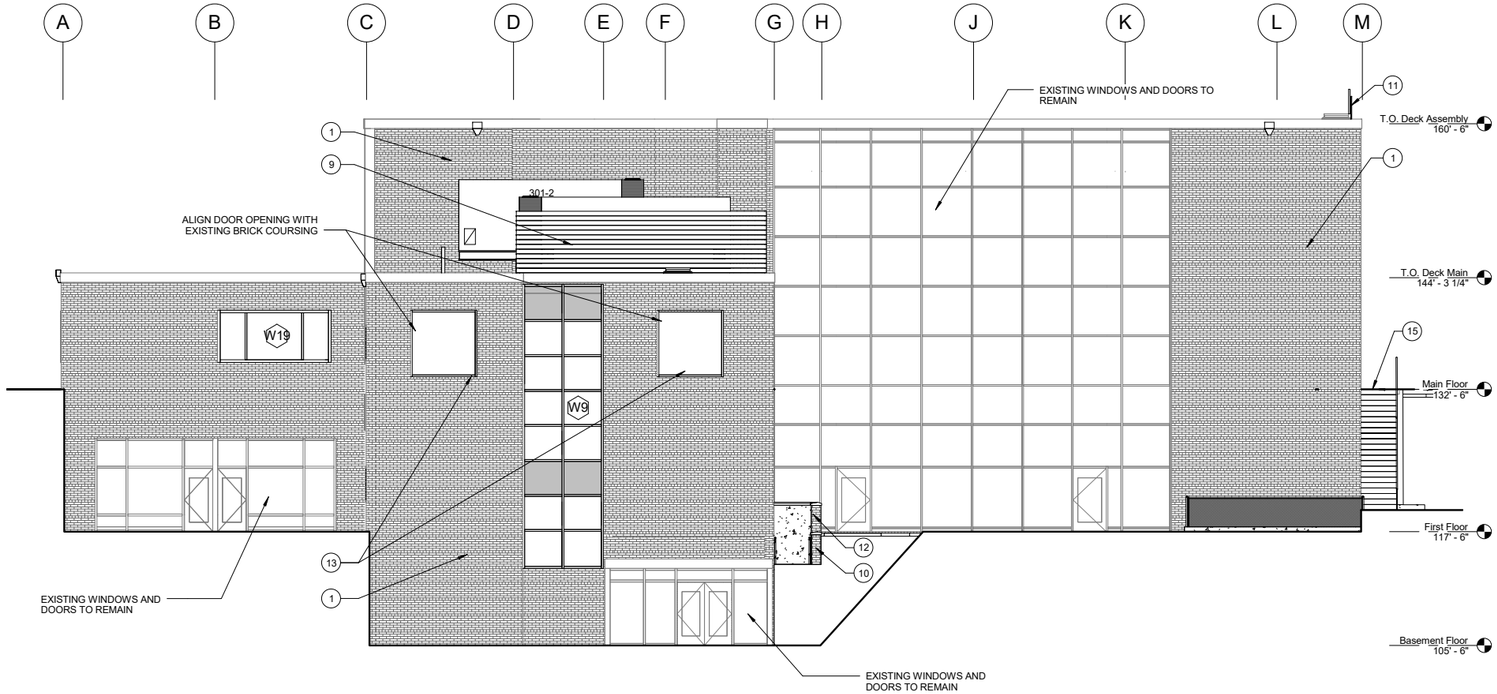

B2 / A3.1 NORTH ELEVATION
1/8" = 1'-0"

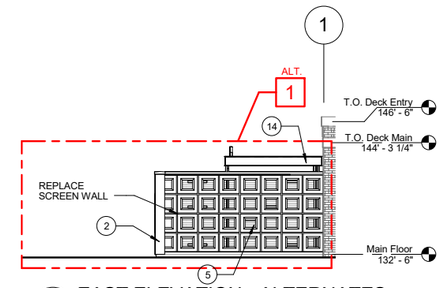

A4 / A3.1 EAST ELEVATION - ALTERNATES
1/8" = 1'-0"

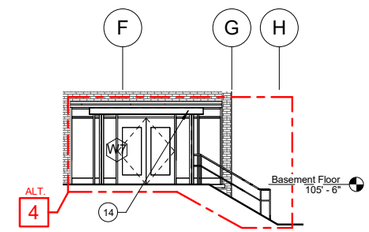

B4 / A3.1 NORTH ELEVATION - ALTERNATES
1/8" = 1'-0"

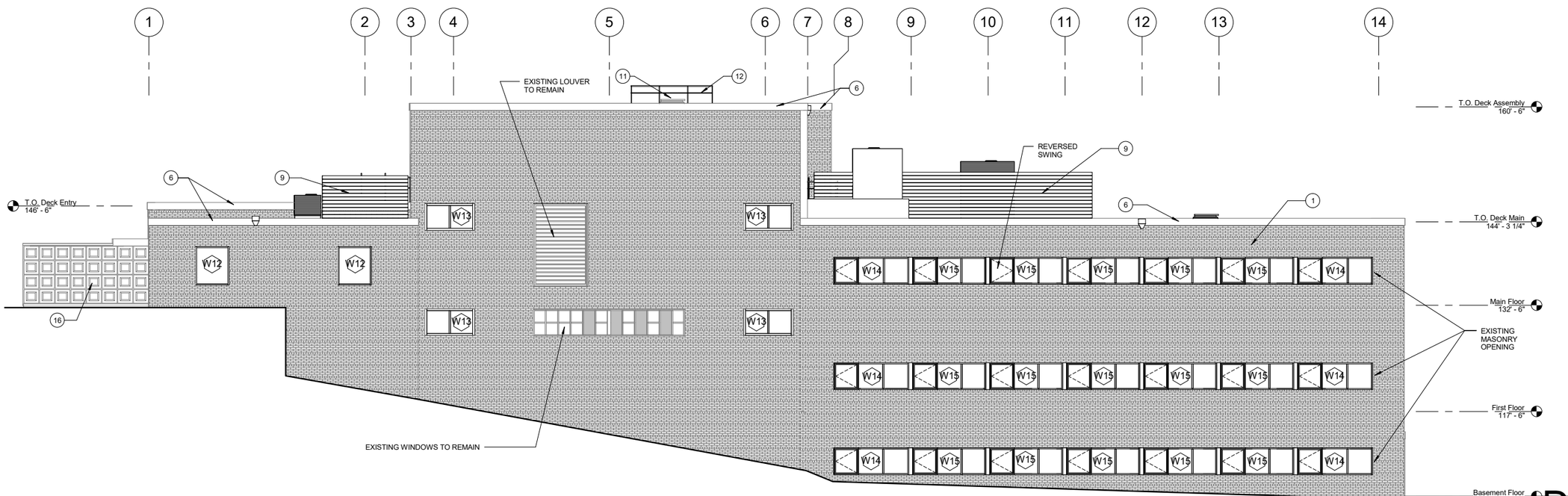

D2 / A3.1 EAST ELEVATION
1/8" = 1'-0"

General Notes

1. PAINT ALL EXPOSED EXTERIOR STEEL WITH EPOXY PAINT.
2. ALL EXPOSED WELDS TO BE CONTINUOUS.
3. ALL EXTERIOR EXPOSED STEEL TO BE ARCHITECTURALLY EXPOSED STRUCTURAL STEEL, TYP.
4. CLEAN EXTERIOR MASONRY WHERE STAINED BELOW WINDOWS.

Construction Notes

1. EXIST. BRICK
2. ADDED BRICK - REUSE/MATCH EXISTING
3. LAP SIDING
4. CMU
5. REPLACE CAST STONE WALL
6. PREFINISHED METAL FASCIA
7. STUCCO
8. GATE WITH COMPOSITE LUMBER FACE
9. MECH. SCREEN
10. C.I.P. CONCRETE
11. EXIST. ROOF HATCH, ADD RAILING
12. RAILING SEE C4 / A7.3
13. GLASS RAILING
14. STEEL CHANNEL AT PERIMETER OF CANOPY
15. REMOVE & REPLACE CONCRETE STEPS
16. EXIST. CANOPY
17. EXIST. CAST STONE SCREEN WALL TO REMAIN
18. INDIVIDUAL LETTER SIGN
19. ALUMINUM INSULATED SPANDREL

Graphic Scales
1/8" = 1' - 0"
0 4 8 16'

DRAFT
NOT FOR CONSTRUCTION

Kodet Architectural Group, Ltd. © 2016

Date: 09/30/13
Project No.: 99515
Drawn By: Author Checked By: Checker
Revisions:

I hereby certify that this plan, specification, or report was prepared by me or under my direct supervision, and that I am a duly Licensed Architect under the laws of the State of Minnesota.
Date June 30, 2016
Architect Edward J. Kodet, Jr. - FAIA License Number: 10206
© Kodet Architectural Group, Ltd.

Kodet Architectural Group Ltd.
15 Groveland Terrace • Minneapolis,MN 55403-1154
E-Mail arch@kodet.com • WebSite www.kodet.com
Telephone 612.377.2737 • Facsimile 612.377.1331

The above drawings, specifications and ideas, design and arrangements represented are and shall remain the property of the Architect, and no part shall be copied, disclosed to others, or used in connection with any other project for which they have been prepared and developed without the written permission of the Architect. Visual contact with these drawings or specifications shall constitute conclusive evidence of these restrictions.

First Unitarian Society of Minneapolis
Renovation
900 Mount Curve Ave
Minneapolis, MN 55403

A3.1
Exterior Elevations

C:\Users\jzinnel\Documents\99515_First Unitarian CD 02_2015_jzinnel.rvt
7/14/2016 2:02:06 PM

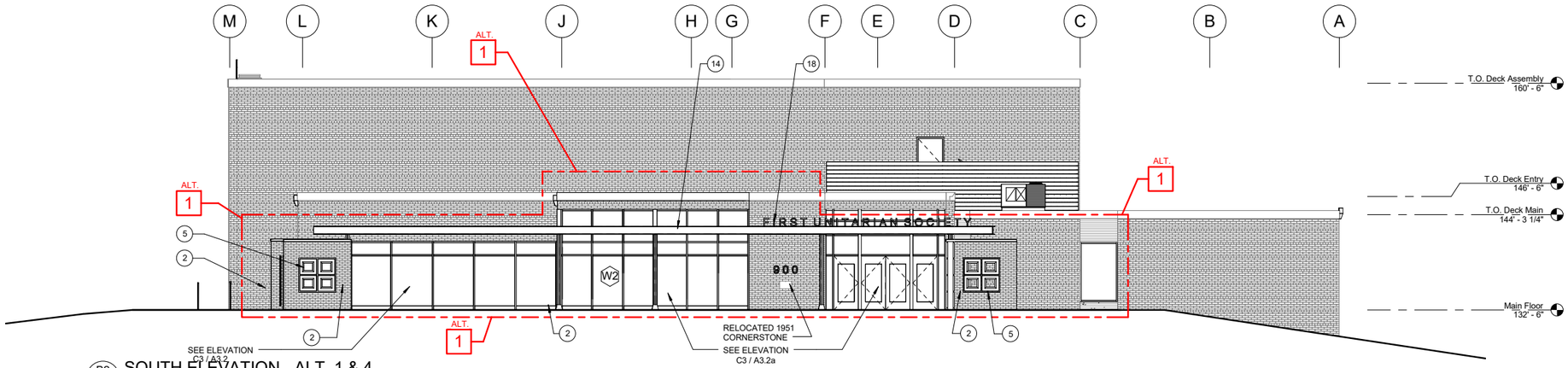

B2 / A3.2a SOUTH ELEVATION - ALT. 1 & 4
1/8" = 1'-0"

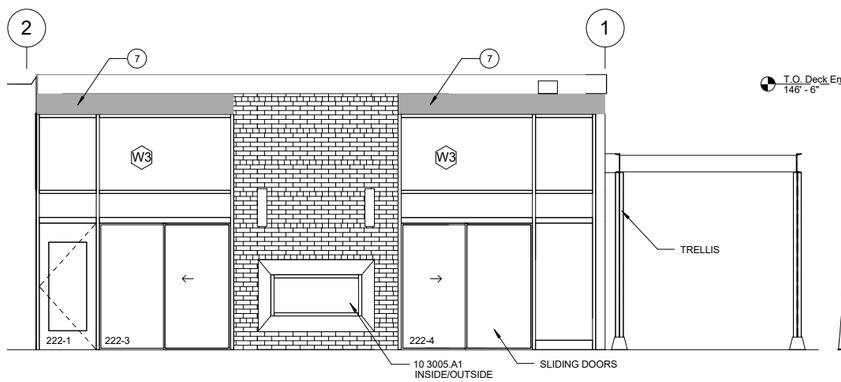

C1 / A3.2a EAST COURTYARD ELEVATION - ALT. 1
1/4" = 1'-0"

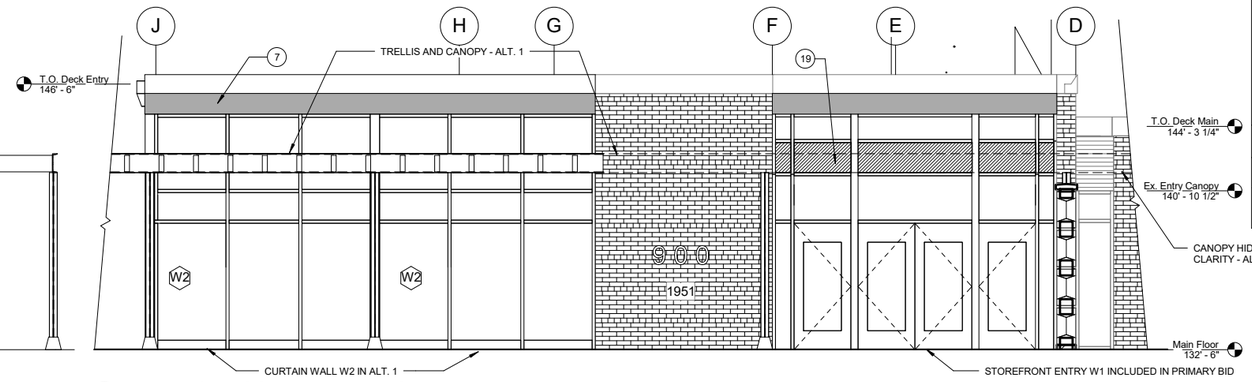

C3 / A3.2a ENLARGED SOUTH ELEVATION - ALTERNATE 1
1/4" = 1'-0"

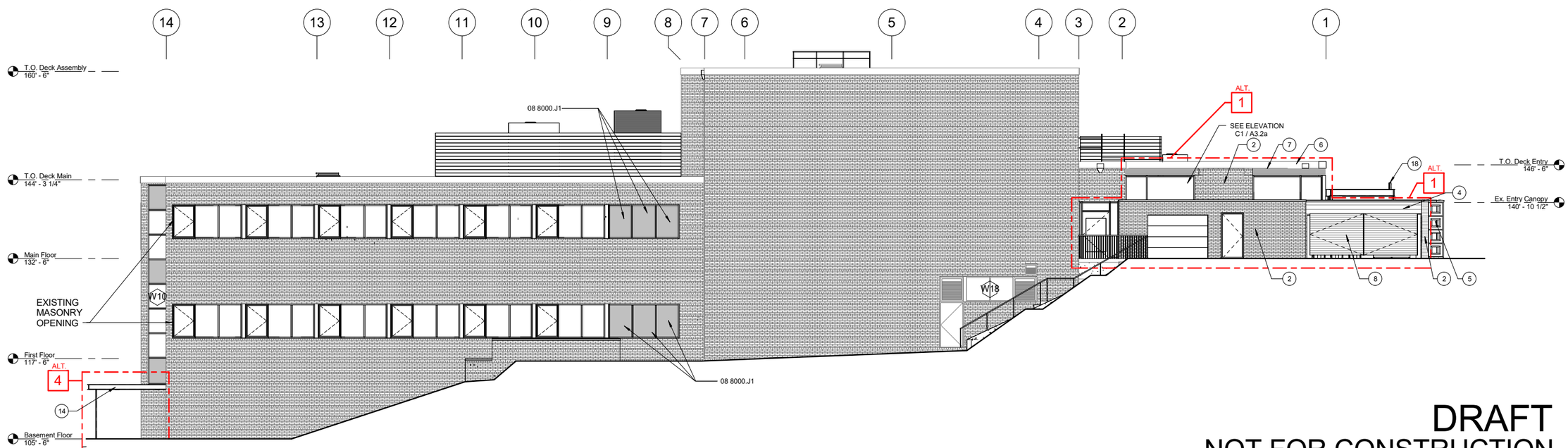

D2 / A3.2a WEST ELEVATION - ALT. 1 & 4
1/8" = 1'-0"

General Notes

1. PAINT ALL EXPOSED EXTERIOR STEEL WITH EPOXY PAINT.
2. ALL EXPOSED WELDS TO BE CONTINUOUS.
3. ALL EXTERIOR EXPOSED STEEL TO BE ARCHITECTURALLY EXPOSED STRUCTURAL STEEL, TYP.
4. CLEAN EXTERIOR MASONRY WHERE STAINED BELOW WINDOWS.

Construction Notes

1. EXIST. BRICK
2. ADDED BRICK - REUSE/MATCH EXISTING
3. LAP SIDING
4. CMU
5. REPLACE CAST STONE WALL
6. PREFINISHED METAL FASCIA
7. STUCCO
8. GATE WITH COMPOSITE LUMBER FACE
9. MECH. SCREEN
10. C.I.P. CONCRETE
11. EXIST. ROOF HATCH, ADD RAILING
12. RAILING SEE C4 / A7.3
13. GLASS RAILING
14. STEEL CHANNEL AT PERIMETER OF CANOPY
15. REMOVE & REPLACE CONCRETE STEPS
16. EXIST. CANOPY
17. EXIST. CAST STONE SCREEN WALL TO REMAIN
18. INDIVIDUAL LETTER SIGN
19. ALUMINUM INSULATED SPANDREL

Graphic Scales

1/8" = 1' - 0" 0' 4' 8' 16'

Date: 06/01/16
Project No.: 99515
Drawn By: Author Checked By: Checker
Revisions:

I hereby certify that this plan, specification, or report was prepared by me or under my direct supervision, and that I am a duly Licensed Architect under the laws of the State of Minnesota.

Date June 30, 2016
Architect Edward J. Kodet, Jr. - FAIA License Number: 10206

©Kodet Architectural Group, Ltd.

The above drawings, specifications and ideas, design and arrangements represented are and shall remain the property of the Architect, and no part shall be copied, disclosed to others, or used in connection with any other project for which they have been prepared and developed without the written permission of the Architect. Visual contact with these drawings or specifications shall constitute conclusive evidence of these restrictions.

Kodet Architectural Group Ltd.
15 Groveland Terrace • Minneapolis,MN 55403-1154
E-Mail arch@kodet.com • WebSite www.kodet.com
Telephone 612.377.2737 • Facsimile 612.377.1331

First Unitarian Society of Minneapolis
Renovation
900 Mount Curve Ave
Minneapolis, MN 55403

A3.2a
Exterior Elevations Alternate

DRAFT
NOT FOR CONSTRUCTION

Kodet Architectural Group, Ltd. © 2016

C:\Users\jzinnel\Documents\99515_First Unitarian CD 02_2015_jzinnel.rvt
7/14/2016 2:02:45 PM

Kodet Architectural Group, Ltd. © 2016

First Unitarian Society of Minneapolis

Annual Meeting - May 18, 2016

Perspective - Mount Curve Avenue Entrance

Minneapolis, MN

Kodet Architectural Group, Ltd.
15 Groveland Terrace • Minneapolis, MN 55403-1154
Telephone 612.377.2737 • Facsimile 612.377.1331

Groveland Terrace
Mt Curve Ave
Mt Curve Ave

Groveland Terrace
Groveland Terrace
Mt Curve Ave
900 Mount Curve Ave,
Minneapolis, MN 55403
Mt Curve Ave

People making
Values making
PLURALISM
UNITY
HUMANISM

FIRST
UNITARIAN
SOCIETY
OFFICE

FIRST
UNITARIAN
SOCIETY
900 MT. CURVE
FIRST
UNITARIAN
SOCIETY

CAUTION
DO NOT PLAY ON OR AROUND
NOTICE