Department of Community Planning & Economic Development
250 South 4th Street, Room 300
Minneapolis, MN 55415-1385

MEMORANDUM

TO: City Planning Commission, Committee of the Whole

FROM: Hilary Dvorak, Principal Planner, (612) 673-2639

DATE: July 9, 2015

SUBJECT: EIFS Discussion

The applicant of the Handicraft Building City Apartments development, located at 89-91 South 10th Street and 1004 and 1016 Marquette Avenue, is proposing to build a new 18-story high-rise residential building. The new building will be attached to the existing Handicraft Guild building, which is a locally designated historic landmark, via a new three-story glass link.

The applicant is proposing to utilize an EIFS panelized system as an exterior building material. For over a decade, CPED and the City Planning Commission have not allowed EIFS as an exterior building material due to a concern about the material's durability.

In this case, we have asked the applicant to provide additional documentation about buildings that have had EIFS in place for a long period of time. Particularly we are interested in buildings in a similar climate. CPED is hoping to obtain such a list in order to contact those building owners and public officials in those communities to discuss how the product has performed.

Handicraft Building City Apartments

Responses to feedback from COW meeting on 4/30/15:

1) EIFS:
   The EIFS product that is proposed for the apartment exterior is manufactured by Sto and is a panelized and drainable high-performance exterior wall system. See enclosed material information for more details. A material sample has also been made available for review by planning staff and commissioners.

2) Streetscape along 10th Street:
   The 10th Street streetscape has been updated to be more consistent with the Marquette Avenue streetscape. It is still our desire to use pavers to announce the main residential entrance and the pedestrian connection to the restaurant courtyard; therefore that notation remains on the site plan. Additionally, perennial plantings are incorporated into the tree planters, to provide additional greening of the boulevard. We share the Downtown Council's goal of greening the public realm.

3) Brick return from 10th Street to Marquette Avenue:
   In response to what was discussed by several planning commissioners as an awkward transition between the masonry 10th street façade and the masonry Marquette façade at the walk-ups, and the building above, we have altered this transition to allow it to turn the corner more seamlessly. We have maintained a difference in look and detail between the two facades (retail façade on 10th, maisonette façade on Marquette), but have lowered the 10th street side to time out with the Marquette side, and then positioned the brick to be in the same plane to wrap the corner more easily. There is now a simple control joint located 2'-0" back on Marquette separating the banding and detail changes to be a bit more subtle. We believe this ties the entire new building formality of the base together for the new building while maintaining the distinction between the two sides. This distinction is still prevalent with the larger cornice, differentiated detailing and storefronts on 10th Street to echo the character of the 10th Street pedestrian experience.

4) Driveway width variance – maneuvering:
   Turning movements have been included for the loading zones as well as the parking stalls that utilize the alley width for maneuvering.

Project Overview

The Handicraft Building City Apartments project provides a mixed-use complex consisting of upscale apartments, amenity spaces, a restaurant, new commercial co-office space and retail space. The new high-rise apartment building will house 288 units plus 5 street-level maisonettes ranging from small studio units up to 2 bedroom/2 bath units. The project incorporates dwelling units, appropriately sized, which will allow college graduates and young professionals making $35,000 to $40,000 a year, a place to reside in the downtown core. The 18th floor will provide an outdoor roof terrace and sky club, with active and passive spaces, for the private use of the building's residential tenants.

The streetscape along Marquette Avenue will incorporate urban 2-story walk-up townhomes, reminiscent of downtown Vancouver's residential maisonettes, to create a new, vibrant, pedestrian-friendly environment while screening some limited parking spaces and utility/storage areas. In a nod to capture the street's current pedestrian qualities, the base of the building will be clad in a brick veneer framework with large gridded windows and defined individual entrances to the maisonettes, in keeping with the scale of the former commercial streetscape along Marquette. The ground level façade along 10th is designed to be reminiscent of the current existing building and maintain the character of the 10th Street pedestrian experience.

The project represents a seamless integration between structure, function, materials and aesthetics to create an architecture grounded in the craft of making and current technologies. The structure consists of a steel post/girder, and precast concrete slab framework with an efficient and repetitive grid. The exterior evolves from this regular grid system to incorporate large floor to ceiling window units that alternate with a solid energy-efficient insulated wall panel.

The building incorporates classic, timeless design methods and colors to create a strong base, middle and top to the building with the top two floors consisting of penthouse units with extensive glass. The middle of the building has influences of Mondrian proportions and organizational order, to harmonize the façade yet be unique and elegant. The color palette is simple yet timeless – using white and charcoal grey along with accents of the orange earthen-tone bricks and wood tones. The window systems will have floor to ceiling glass in order to include a significant amount of glass to be equal to or exceed the three most current downtown residential projects (Latitude 45, 4 Marq and The Nic).

The historic Handicraft Guild building, located at 89-91 South 10th Street, will be rehabilitated as part of the new development. The Handicraft Guild building is locally designated by the Minneapolis Heritage Preservation Commission (HPC) as an example of the religious and cultural development of Minneapolis. It was designed for and housed a leading arts organization during a period when the Arts and Crafts movement flourished. A Certificate of Appropriateness is requested to allow for the proposed renovation. In order to allow the new apartment building to sit on the same zoning lot as the Handicraft Guild building, a historic variance is being sought.

Two buildings will be demolished as part of the development. They are located at 1004 Marquette Avenue South and 1016 Marquette Avenue South. The 1004 Marquette building, which shares a party wall with the Handicraft Guild building, was included in the City's 1998 designation of the Handicraft Guild building, however, the Court of Appeals overturned the designation of the 1004 Marquette building because there was no evidence that it is culturally or historically significant on its own or through association with the Handicraft Guild. Neither of the buildings that will be demolished are historic resources, so no HPC review is required for the demolition.

The renovated Handicraft Guild building will house restaurant and office space as well as apartment amenities such as concierge services, leasing functions and fitness spaces. The renovation will include rehabilitation of the exterior. The applicant is proposing to locate the primary entrance for the project on 10th Street in the historic building. There is an existing limestone entry pediment at this front entry that is cracked. This will be removed, repaired and re-installed. Also, the applicant will clean and restore the original text "91 Handicraft Building" to original condition.

Masonry will be cleaned and repointed, while damaged masonry units will be replaced. The applicant will remove existing mortar joints which appear to be different from original (previously performed tuck pointing and masonry patching which does not match color, texture, and/or composition or bond pattern) and repoint. All existing non-historic paint (signage, graffiti, or other) on existing brick will be removed, using the gentlest means possible. Original surface integrity and finish of existing brick shall be maintained during and after paint removal. Brick will not be sand-blasted. See enclosed noted elevations for more detail.

The existing roof will be replaced. The existing roof membrane will be removed at the gable, including all flashings. It will be replaced with metal standing seam panels, flashings and fascia, with gutters/downspouts to match. All other flat roofs are to be replaced, including flashings, copings and scuppers/downspouts.

A window survey has been completed in order to evaluate the condition of the existing windows and doors to determine a treatment plan. See enclosed memo and elevations for the proposed treatment of each opening. Non-historical infill material will be removed from original openings. New storm windows will be added to the interior of all windows. All skylights are to be restored to their original condition. See enclosed window survey elevations for the intended treatment of each condition.

A narrow, glass link will provide a connection between the Handicraft Guild building and the first three levels of the new apartment building. To accommodate this link, a new opening will be saw cut into the east wall of the existing building at each floor level. A new steel lintel will be installed within existing mortar joints. The link will be approximately 15 feet in depth located about 34 feet back from the 10th Street facades, creating minimal impact to the historic building and minimal visibility from the street. New windows will be installed on the east façade of the existing building, just south side of the proposed glass link, to provide a visual and physical connection from the interior space and the exterior courtyard. The revamped courtyard will transform a blighted asphalt covered area into a beautifully landscaped courtyard providing intimate outdoor seating and green space for the restaurant.

BKV GROUP

Architecture Interior Design Landscape Architecture Engineering
Phone: 612.339.3752 Fax: 612.339.6212 www.bkvgroup.com
Enriching Lives and Strengthening Communities

Memorandum

TO: Minneapolis Planning Commission (CPC)
Hilary Dvorak, Minneapolis CPED
FROM: BKV Group
CLIENT NAME: Village Green Companies
PROJECT: Handicraft Building City Apts **COMM. NO.:** 1872.02
DATE: June 8, 2015
RE: Exterior Material Info - EIFS

Please find below additional information regarding the proposed EIFS system for the Handicraft project:

- Today's EIFS systems for high-rise buildings consist of shop-fabricated components, instead of site-built systems typically used for single-family and small commercial projects. This allows for the highest level of quality for the system, with 95% of the project completed in a controlled shop environment.

- The proposed EIFS system consists of encapsulated panels that prevent any water intrusion through to the building. The Sto Guard Moisture/Air Barrier continuous sheeting is returned around the steel studs to the edge of the flange, ensuring that the panel is water tight.

- The EIFS system for this project has all quality and water tightness controlled through a single source - the panel fabricator.

- The proposed EIFS system is durable, having been used on large-scale project for over 30 years in a variety of climates, successfully holding strong through winter storms and hurricanes.

- The warranty for such a system includes a 5-year performance warranty plus a 12-year warranty for the system finish.

- A partial list of other projects that use the proposed system:
  - Hilton Garden Inn – Mankato, MN
  - Caesars Centurion Tower Hotel – Atlantic City, NJ
  - Tropicana Hotel Tower – Las Vegas, NV
  - Mayfair Renaissance – Atlanta, GA
  - Hollywood Slots – Bangor, ME
  - The Children's Hospital of Philadelphia – Philadelphia, PA
  - Capital Health Hospital – Trenton, NJ
  - Trinitas Healthcare – Elizabeth, NJ
  - The Penthouses at Rowan Boulevard – Glassboro, NJ

END OF MEMO

Sto Panel Technology sto

qcp Queen City Panel

May 18th 2015

Community Planning and Economic Development
250 South Fourth Street
Minneapolis, MN 5415

Dear CPED,

I'm looking forward to our visit on Tuesday and being able to share the success stories about Sto Panel. As a Sto Panel Affiliate, we are a member of an elite group of pre-fabricators who have enclose towers in excess of 32 levels, in hurricane areas using the exact same system being proposed for the Handicraft project.

The Sto Classic Ci system has been pre-fabricated for over 25 years. In fact if you've stayed at Harrah's, Caesar's or Tropicana hotel in Las Vegas or Atlantic City, you've stayed at a building that was enclosed by panels. Caesar's in Las Vegas has over 1,000,000sq. ft. of panels.

As you will read in the Sto letter attached, many of these projects survived hurricane Sandy without a single failure. The product being produced by the Sto Panel Affiliates is of the highest of quality and given the wide variety of Sto coatings available such as simulated metal panel, stone, brick ect the design potential is limitless. I'm certain that with your approval the exterior of Handicraft will be as aesthetically pleasing as it is functional. Below are benefits of the system that we will talk about and expand on Tuesday.

43 Rock Port Lane SE
Rochester, MN 55904
www.queencitypanel.com
Office: 507-282-6747
Fax: 507-282-1498

Quality Control

- The best drawn details are only as good as the installation and moving the quality control process into a climate controlled facility at ground level simplifies details and inspections.
- Sto Guard Moisture/Air Barrier continuous across sheeting returned around steel studs to the edge of the flange ensures that the panel is water tight.
- Responsibility for quality and water tightness is sole source as we manufacture, shrink wrap, transport and install the system. One manufacture, one installer, one warranty.
- A conventional project of this size would almost certainly have to be partially completed during cold months where freezing is always a concern. Plastic enclosures with temp heat create carbon monoxide concerns and the humidly created by temp heat makes it more difficult to ensure finishes turn out perfect.

Warranty

- Sto Panel is backed by the only industry exclusive 5 year “performance warranty” which applies to any panel that uses the Sto Guard Moisture Air Barrier. This warranty is applicable not only to the Sto Classic Ci Panel but to any panel that utilizes this moisture air barrier even and pay to remove and reinstall the exterior cladding even if it isn’t a Sto product, such as stone, metal panel ect.
- Sto Panel warranties the finish for 12 years.

Safety

- 95% of the project is competed at ground level instead of working off a scaffold or swing stage/man basket far above the ground.

Speed

- Construction sites are eye sores and pre-fabricating and erecting the exterior reduces onsite time to 30 days of panel installation vs. 6 months or longer when compared to field work.

Thanks for your time and I look forward to seeing you Tuesday.

Sincerely,

Aaron Krueger
V.P. of Business Development
Queen City Panel
5267 US Hwy 14 East
Rochester MN 55904
C:: 507-261-0274
O:507-282-6747
http://www.queencitypanel.com/

Sto Panel Technology

Sto Corp.
3800 Camp Creek Parkway
Building 1400, Suite 120
Atlanta, GA 30331
Tel: 404-346-3666
Toll Free: 1-800-221-2397
Fax: 404-346-3119
www.stocorp.com

May 18, 2015

Aaron Krueger
V.P. of Business Development
Queen City Panel
5267 US Hwy 14 East
Rochester MN 55904

Aaron:

I'm following up on the letter you forwarded me from the BKV Group. Please allow me to comment on some of the points and questions they posed.

Q: How the proposed system(s) are significantly better than the old?
A: When referring to the "old" in most cases individuals are questioning methods of using insulated systems in a field applied application. That process would be conventional construction using scaffolding and workers applying the system with framing built on the building. Over the years though millions of square feet of this type of application have been applied problems and less than 2% of that work coming almost exclusively out of the residential housing market have made news. Though Sto supports and completes thousands of projects each year with impeccable success with this field applied systems on the job in question Queen City is proposing our pre-engineered/prefabricated exterior wall. This product, though it does use Sto insulated acrylic materials is a totally different approach from field application. First, a couple of statistics on our StoPanel. This design has been in use for more than 30 years on projects of all sizes including high rises over 300 feet high and some project including more than one million square feet. With the countless projects completed over these many years to date not one product failure. The reason for this amazing statistic is several fold. Sto Panel Technology has incorporated the highest quality contractors to carry-out the fabrication of our StoPanel. These companies bring their years of experience, commitment and capacity to a project. As a standard at Sto testing of our products is one of the top three things we do with anything we produce. We provide a "White Paper" on our StoPanel which is something no one else in the exterior industry has. These reports are put together by a third party consultant Morrison Hurshfield a nationally recognized curtain wall consultant. These reports are available for your review should you not have received them as of yet. All of the StoPanel details are part of our branded tested and Warranted program. In an industry exclusive way Sto stands behind these panels with our Sto 5 Year Panel Warranty. This guarantee is in addition to any and all standard material Warrantees which depending on the finish system the project goes with can go up to 15 Years. To be clear, the Sto 5 Year Panel Warranty is a performance guarantee assuring water tightness of the panel. No other such Warrantee exists in the industry but Sto leads by backing what they know has proven itself over millions of square feet in place with zero failure.

Q: The durability of these systems(s) (the old "you can poke a pencil through it" joke is still see as a truism).

A: The fact is this was never true but competing products sensationalized adds years ago showing this despite the baseless accusations. I'd say the best proof of this would be in the samples you produce showing this product can only be damaged by intentional acts such as a sledge hammer. To that I always say "there is a window 6" over from our panel and if you have a problem with that type of behavior than a solid concrete building with no windows might be the only answer". In addition to our Classic ci panel we also offer a Premium ci panel which has passed all requirement for "Hurricane Impact Resistance/ Capable of meeting Miami-Dade County large and small missal impact resistance per Dade County ProtocalTAS-201, TAS 202, and TAS203 (see Miami-Dade NOA No.09-1013.09). Last and most important on this note is the proof provided through years of panels in place. Having lived through some of the worst Hurricanes in history such as "Sandy", "Irene" and "Katrina" our StoPanel proved not only through empirical data with full scale mock-up testing but also practical application on buildings living proof of being one of the strongest building exteriors available today.

Q: Examples of similar installations?

A: The following is a list of some of the projects that would be of the same nature as your job in question. These building range from current to over 25 years in place. I will forward you these photos in a separate e-mail. They are on our SPT App but I'll have them over to you in an e-mail making it easier to coincide with this letter.

- Children's Hospital Philadelphia
- Caesar's Centurion Tower Hotel **
- Tropicana Hotel Tower **
- Harrah's Convention Center
- Mayfair Renaissance Hotel *
- Penthouses at Rowan University
- Silver Slipper Hotel & Casino
- Scarlet Pearl Hotel
- Gold Strike Hotel *
- Capital Health Hospital *
- Trinitas Healthcare *
- Inspira Hospital **
- Westin Hotel **
- Home2 Convention Center Hotel **
- The Grand **

Q: Examples of durability (the hurricane/storm survivors).

A: The projects listed above with one asterisk * are those that have been around for a minimum of 10 years and some over 20. Those with two asterisk ** have been around that same period of time but have also been in the direct line of these most significant history hurricanes.

I would also offer myself to you and anyone involved with your project to join in on a call or meeting to further discuss our Sto industry leading program and product lineup. Thanks again.

Sto Panel Technology

Dominick P. Baruffi, II
Executive Director

June 8, 2015

City of Minneapolis
CPED Public Service Center
250 South Fourth Street (Room 300)
Minneapolis, MN 55415

A New Vision
to Construction

TLS Companies

1951 Kerry Drive NE
Rochester, MN
55906
PH 507.208.0679

TLSCompanies.com

RE: Queen City Panels/EIFS

To whom it may concern,

I recently was a commissioner of the Planning and Zoning Commission of Rochester, MN. The past two years as Vice Chair and Chair of the Planning and Zoning Commission. We reviewed several hundreds of projects that vary in exterior finishes overall those years. My experience alone with EIFS and my service on this commission I have no reservations in the past or future of approving this product on any commercial building project.

If you have any further questions or concerns about this product or any other products I would welcome a call, 507-208-0679 or tseverson@tlsconstruction.com.

Sincerely,

Todd L. Severson
President

T L S Companies
A New Vision to Construction

Mankato, Minnesota | Hilton Garden Inn
Built in 2006
28,000sq. ft. Sto Classic Panel

This coming year will mark the Mankato Hilton Garden Inn's 10th year of operation, and I am happy to report that the exterior EIFS on the building looks just as good as when it was the building was new. In fact, the exterior still has a new building look and consistent color across all the entire building exterior. Even though we have not washed the exterior, it still appears clean.

Aesthetics and function is very important to the Hilton properties building standards. Judging how well this building has aged, I have no doubt the EIFS will look great for many years to come. We have also not experienced any problems with wall panels leaking or issues with fit from panel to panel over time.

Steve Tacheny, General Manager
Hilton Garden Inn Mankato, MN
507-344-1111

qcp
Queen City Panel

The Most Advanced Technology in Prefabricated Insulated Wall Panel Solutions!

US Department of Energy says EIFS outperforms other cladding systems for thermal and moisture protection.

View US Department of Energy study at:
www.ornl.gov/sci/roofs+walls/research/EIFS/eifs.htm

Rochester, Minnesota
Marriot | Built in 2003
34,510sq. ft. Sto Classic Panel

US Department of Energy says EIFS outperforms other cladding systems for thermal and moisture protection.

View US Department of Energy study at:
www.ornl.gov/sci/roofs+walls/research/EIFS/eifs.htm

Our building exterior has easily handled the harsh Minnesota climate, and has proven to be very low maintenance. Since it's construction in 2003, it has not so much as even needed a power washing. It has also passed the Marriot "High Curb Appeal" standards.

Emily Nichels, General Manager
enichels@kahlerhospitalitygroup.com
847-924-7031

qcp
Queen City Panel

The Most Advanced Technology in Prefabricated Insulated Wall Panel Solutions!

Titan Executive Offices | Rochester, MN
7 Stories | Built in 2014
• Sto Classic Creative Lux Granite •

I have owned and managed several buildings with EIFS construction. They all look great and perform well, even after several decades of exposure to the elements. We chose to use STO Panel on our project because they were able to offer a panel that was reinforced by cement at the ground level of the building for durability. On floors 2-7 we were able to utilize an insulated panel which increases the "R" value of the exterior wall. Both panels were able to share the same exterior finish coatings so they looked identical when viewed on the finished building.

I've been very satisfied with the EIFS product over the years and STO's process of manufacturing the panel inside as opposed to outside in the elements. This allows for better control and consistency of the panels and building dimensions then projects where we have used site-built walls under a variety of weather conditions.

Andy Chafoulias, CEO
Owner of Titan Investments

qcp
Queen City Panel

The Most Advanced Technology in Prefabricated Insulated Wall Panel Solutions!

US Department of Energy says EIFS outperforms other cladding systems for thermal and moisture protection.

View US Department of Energy study at:
www.ornl.gov/sci/roofs+walls/research/EIFS/eifs.htm

The Children's Hospital of Philadelphia

Philadelphia, PA

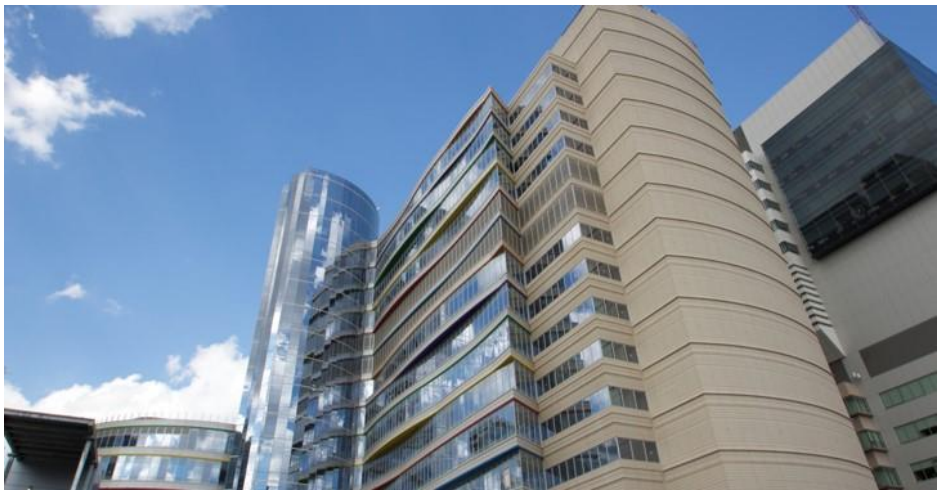

Project Details:

- **Owner:** Children's Hospital of Philadelphia
- **General Contractor:** Turner Construction
- **Architect:** FKP Architects and Pelli Clarke Pelli Architects
- **Program** (**Building Type):** Hospital
- **On-site Erection Date:** 2014
- **Panel Type:** StoPanel Classic ci

Project Overview

This 339 ft. tall radius tower required a very highly aesthetic exterior wall. The StoPanel offered the architect, construction manager and owner the ability to incorporate an energy efficient, cost effective, light weight panel. All this while reducing the construction schedule with the speed of panelization.

Job Requirements

All panels were fabricated, stored and shipped from regional affiliate Jersey Panel. A tower crane was utilized for installation of the panels.

Smart Solution

This project was originally designed in precast concrete. Moving to StoPanel enabled design elements such as radius wall and heavy aesthetics to keep the project on schedule and on budget.

Phone: (856) 691-7200
Website: www.jerseypanel.com

Hollywood Slots

Bangor, Maine

Project Details:

- **Owner:** Hollywood Slots Casino
- **General Contractor:** Cianbro
- **Architect:** The Urban Group
- **Engineer:** WBRC
- **Program (Building Type):** 7-story hotel and gaming facility
- **On-site Erection Date:** September 2007- March 2008
- **Panel Type:** Load bearing light gauge steel frame

Project Overview

The project encompassed the construction of a 211,000-square-foot gaming facility and seven-story hotel in less than one year.

Job Requirements

Closing in a large building through a Northern Maine winter involves sub-zero temperatures and multiple feet of snow; and exterior finishes require heat well above freezing. The project involved a casino, so cash flow is of high value to the developer and timing was of utmost importance.

Smart Solution

By prefabricating all of the exterior and interior walls, the framing phase started along with the site work. Layers of rigid insulation, exterior synthetic stucco, windows and flashing were applied in a controlled environment off-site. During the installation phase, each 12,500-square-foot floor was installed in just eight days. Then, the GC poured the floor slab in just two days. The entire structure was erected and finished without scaffolding or tenting through a brutal, Northern Maine winter.

Porter BUILDING SYSTEMS

Phone: (207) 699-2339
Website: www.PorterPanels.com

Mayfair Renaissance

Atlanta, GA

Project Details:

- **Owner**: Crescent Heights
- **General Contractor**: Hardin Construction Company, LLC
- **Architect**: Smallwood, Reynolds, Stewart & Steward Associates
- **Engineer**: Uzun & Case Engineers
- **Program (Building Type)**: Condominiums
- **On-site Erection Date**: 2002
- **Panel Type**: StoPanel Classic ci

Project Overview

A 35-story tower built in mid-town Atlanta was designed and constructed to match an adjacent architectural precast concrete tower. The panels were fabricated offsite in Lexington, KY in a controlled environment which enhanced quality control and productivity.

Job Requirements

The panel fabricator was involved early-on to assist in the final design of the exterior wall cladding. This early interaction allowed the team to provide the owner with the best and most cost effective solutions to meet their budget and schedule requirements.

Smart Solution

Because the panels were fabricated offsite, interference with other onsite construction activities was minimized and waste was greatly reduced. The lightweight panels reduced the amount of structural concrete and reinforcing steel when compared to the previously used architectural precast concrete solution. The panels were also more energy efficient because they incorporated a blanket of continuous insulation to reduce heating and cooling costs. The schedule compression realized on the project allowed the owner to start receiving revenue much more quickly than stick-building the project.

Phone: (859) 255-2754
Website: www.grayhawk-ky.com

The Penthouses at Rowan Boulevard

Glassboro, NJ

Project Details:

- **Owner:** Rowan University
- **General Contractor:** Nexus
- **Architect:** Blackney Hayes
- **Program (Building Type):** Residential
- **On-site Erection Date:** 2014
- **Panel Type:** StoPanel Classic ci, StoPanel Brick ci, StoPanel Back Up

Project Overview

The building includes 500,000/SF of floor space, seven stories high and approximately 200,000/SF of exterior wall. A very detailed exterior including three different finish materials – brick, cast stone and textured.

Job Requirements

Total job required a 12-month construction schedule from start to finish. With its use being student housing, the University needed to have the building completed in order to accept the students attending the fall semester. Off-site fabrication enabled the project to achieve a completion date unattainable with conventional construction.

Smart Solution

Combining the use of a fast structure (steel and precast plank) along with prefabricated StoPanel, this developer was able to offer the University a new building with the highest quality and aesthetics all while completing construction within one year.

Phone: (856) 691-7200
Website: www.jerseypanel.com

Evaluation of a Panelized EIFS Wall System

By Chris Norris, P.E, P.Eng, LEED AP, CEI

Panelized exterior wall systems offer the opportunity for improved quality control by moving many of the exterior wall construction operations from the job site to a controlled factory environment. By eliminating the impacts of weather and site conditions panelized exterior wall systems can also reduce construction schedules.

There are many panelized exterior wall systems currently in the market place. These include unitized curtain wall, pre-cast cladding and foam core metal panels.

This paper evaluates a panelized Sto EIFS wall system, StoPanel Classic (Figure 1), that is manufactured and installed by Sto Panel Technology affiliates, including Jersey Panel. The system consists of EIFS cladding over an air barrier, exterior sheathing and light gauge steel stud framing. Panelized EIFS have been used by Jersey Panel on many prior projects and several prior projects were visited as part of this evaluation. The evaluation also included laboratory testing of a panelized Sto EIFS mock-up wall to evaluate system performance.

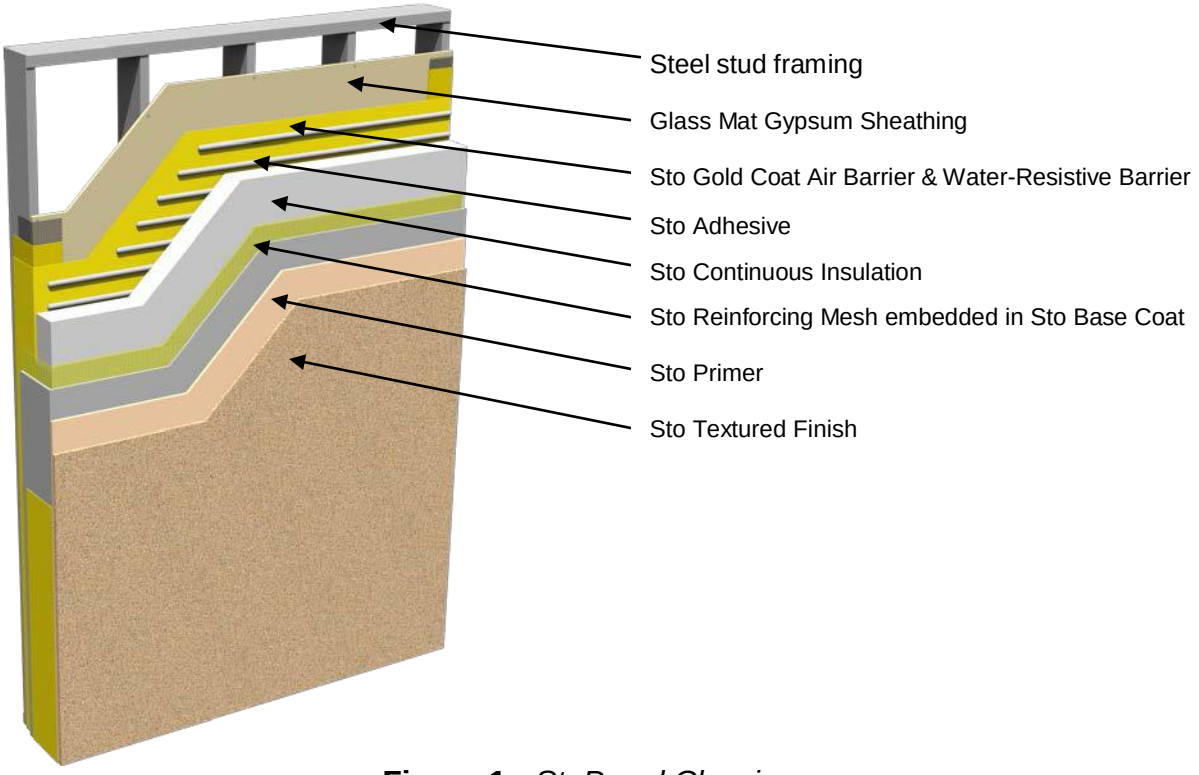

Figure 1: *StoPanel Classic*

Existing Installations

Morrison Hershfield was provided a tour of several prior Sto panelized EIFS projects located in Atlantic City, NJ and Atlanta, GA. There have been no reported failures of these installations with these existing projects. These projects demonstrate the wide range of architectural design flexibility, which is possible with a panelized EIF system. The following photographs highlight some of these prior panelized EIFS projects.

Photo 1: Office Building – Atlantic City, NJ

Photo 2: Caesars Palace – Atlantic City, NJ

Photo 3: Mayfair, Renaissance – Atlanta, GA

Mock-Up Fabrication and Assembly

The mock-up assembly included two EIFS panels, a vertical sealant joint between the panels, a window installation, and an electrical box installation. All penetrations and panel joints were sealed with dual stage sealant joints.

The EIFS panels used for this laboratory evaluation were fabricated at the Jersey Panel facility in Vineland, NJ following Sto Panel Technology standard fabrication protocols. These panels were shipped to the testing laboratory for installation on a test frame. Refer to Photos 4-6 and Figures 2-6 for the tested assembly.

Photo 4: Panel prior to window installation

Photo 5 (Left): Panel joint and electrical box prior to installation of sealants

Photo 6 (Right): View of completed assembly

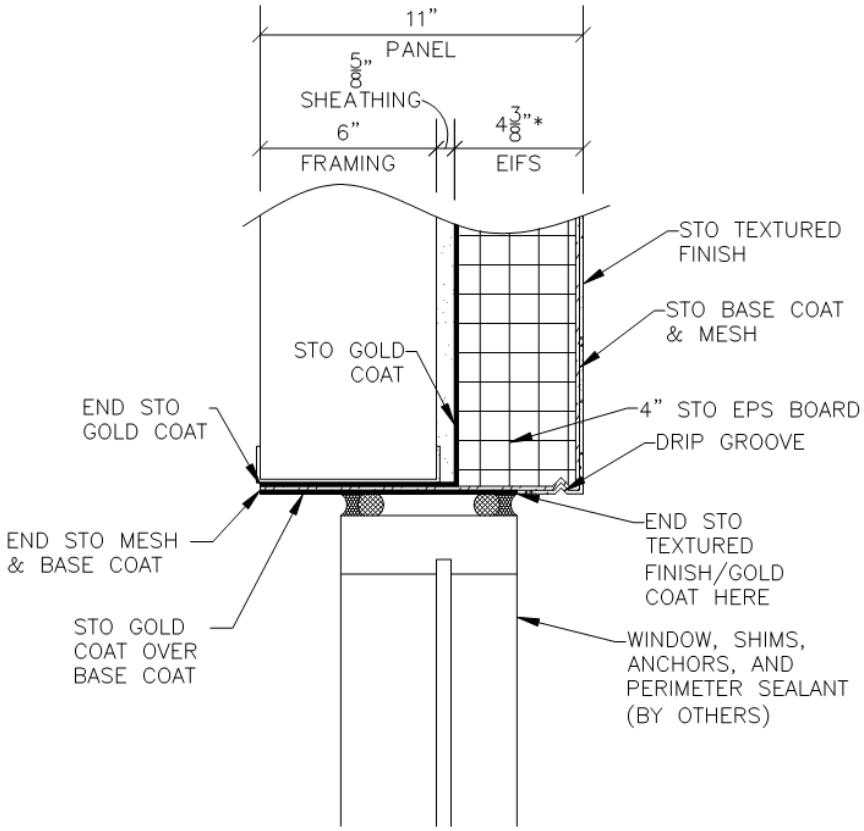

Figure 2: *Window head detail*

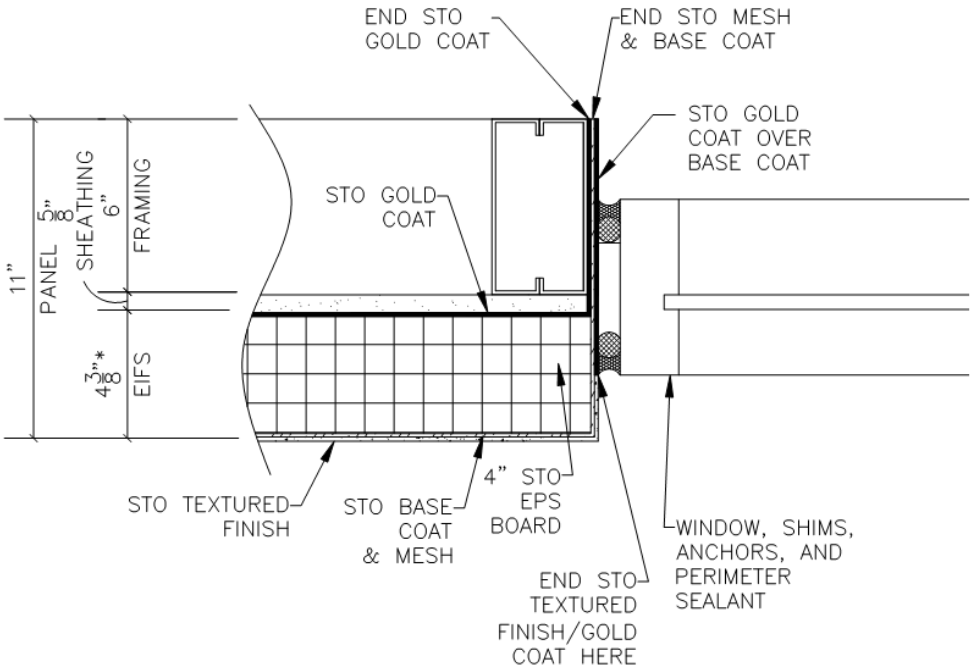

Figure 3: *Window jamb detail*

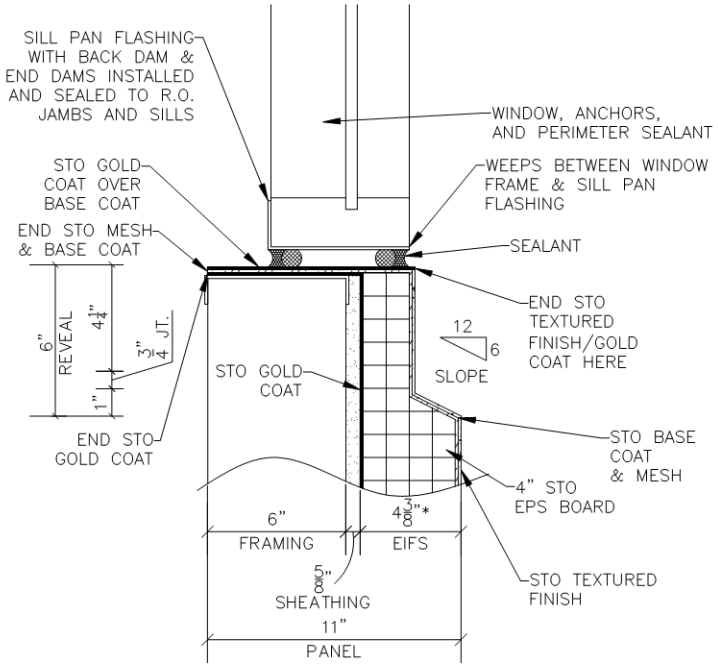

Figure 4: *Window sill detail*

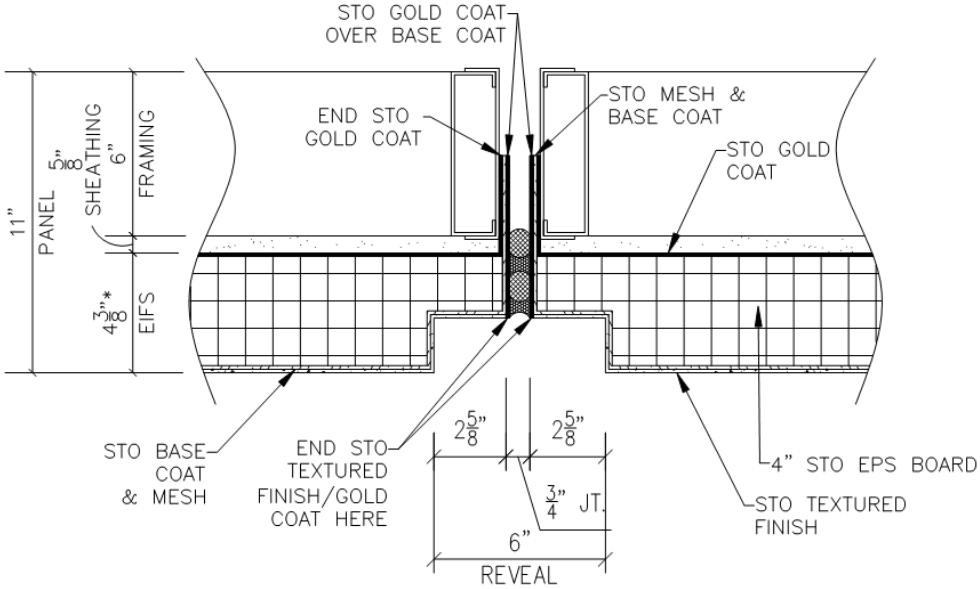

Figure 5: *Panel to panel joint detail*

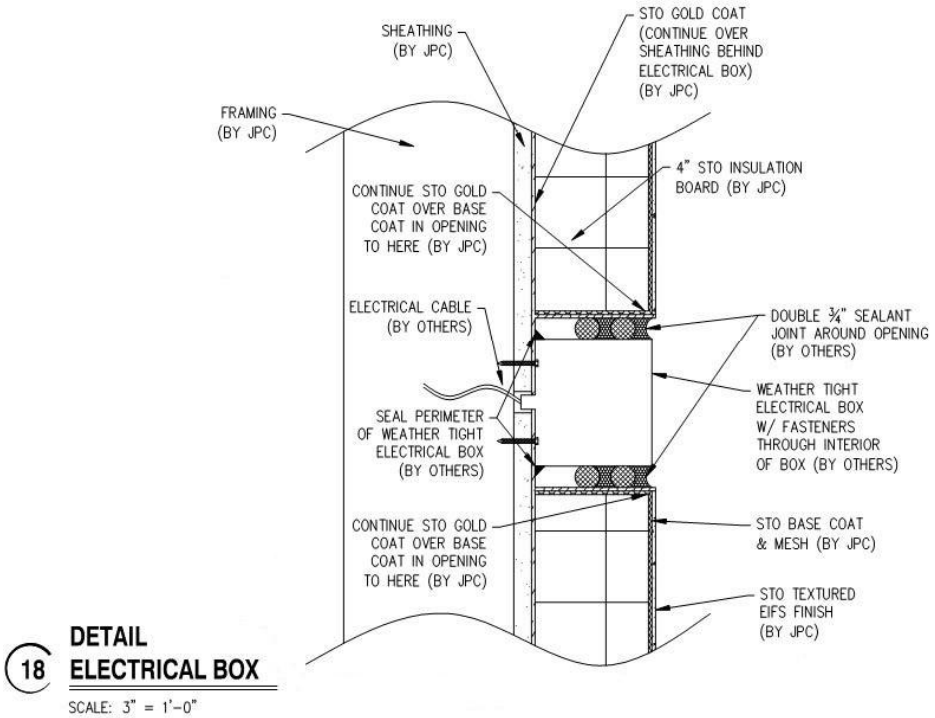

Figure 6: *Electrical box penetration detail*

The stud framing, sheathing, Sto Gold Coat air barrier, and Sto EIFS are all applied at the fabrication facility. Sto Gold Coat wraps all exposed edges of each EIFS panel. A window opening was provided in one panel for installation of the window at the testing laboratory. A block out was left in the other panel to receive an electrical box.

The EIFS panels were installed by Jersey Panel. The panel-to-panel sealant joint and the electrical box penetration sealant were installed by a sealant contractor. The window and associated sealant joints were installed by a window contractor. This simulates the typical installation for this system where Jersey Panel provides and installs the panels, and other sub-trades install windows, electrical penetrations, and sealant joints.

The frame assembly provided by the testing laboratory included tube steel framing, which simulated a floor slab condition. The EIFS panel was connected to the steel tubes using steel plates and solid rods. The structural connection detail to the EIFS panels was identical to the detailing used on typical projects. Refer to Photos 7-8 and Figures 7-8 for connection details.

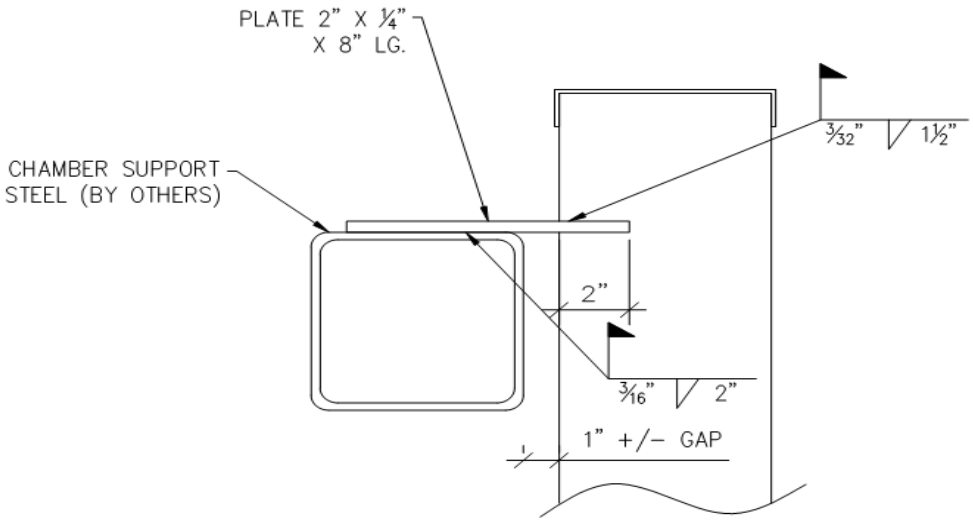

Figure 7: *Bearing Connection*

Photo 7: Bearing Connection

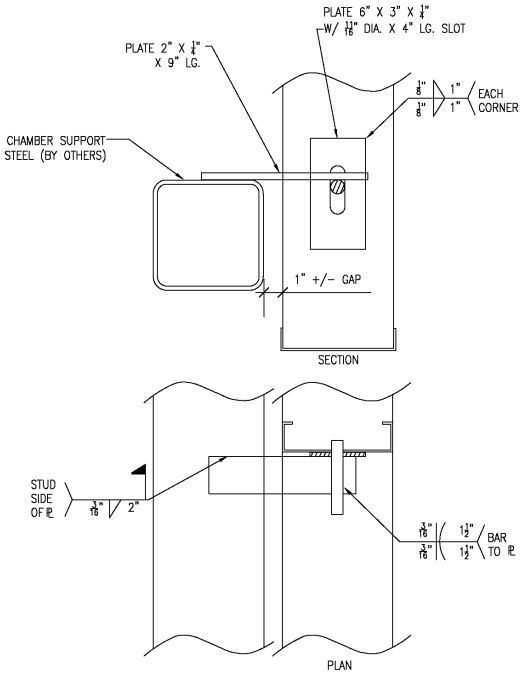

Figure 8: *Non-Bearing Connection*

Photo 8: Non-Bearing Connection

Laboratory Mock-Up Testing by ATI

The exterior wall mock-up assembly was laboratory tested at Architectural Testing, Inc. (ATI), in York, PA[1] to evaluate the water penetration, air leakage, and structural capabilities of the panelized EIFS. (Photo 9)

Photo 9: Mock-up Testing Setup

The laboratory mock-up was constructed with the standard detailing used by Jersey Panel and with a stock window system to allow evaluation of a typical installation. The tested mock-up included two EIFS panels, a vertical joint between the panels, a window installation, and an electrical box installation. Dual stage sealant joints were installed at the EIFS panel-to-panel joint and at the electrical box in accordance with Jersey Panel's standard detailing.

The window was installed in a sill pan with structural attachment of the sill pan in accordance with the window manufacturer details. Manufacturer window attachment details were used without modification in order to allow for an objective evaluation of the window and the window installation method in conjunction with the panelized EIFS as might occur on a real project. Refer to photos 10 and 11 for sill pan installation.

[1] ATI is considered one of the premier exterior wall window, and curtain wall testing labs in the United States, and is fully accredited by AAMA (American Architectural Manufacturers Association) and IAS (International Accreditation Service).

Photo 10: Sill pan installation showing fastener through sill pan

Photo 11: Sill pan installation showing sealant applied over fastener head and at end dams

Test Methodology

Although dual stage joints are provided between panels and at all penetrations, the tested assembly is considered to be a barrier wall system since there is no drainage plane between the EIFS insulation and the sheathing. In consideration of the requirements of the International Building Code (IBC) Chapter 14[2] for non-drained wall assemblies the mock-up was subjected to a two-hour water penetration test duration.

The mock-up was tested for water penetration, air leakage and structural performance. All tests were conducted in accordance with standard test methods (ASTM and AAMA tests). The following test methods were utilized:

- ASTM E330 *Standard Test Method for Structural Performance of Exterior Windows, Doors, Skylights and Curtain Walls by Uniform Static Air Pressure Difference.*
- ASTM E283 *Standard Test Method for Determining Rate of Air Leakage Through Exterior Windows, Curtain Walls, and Doors Under Specified Pressure Differences Across the Specimen.*
- ASTM E331 *Standard Test Method for Water Penetration by Uniform Static Air Pressure Difference*.
- AAMA 501.1: *Standard Test Method for Exterior Windows, Curtain Walls and Doors for Water Penetration Using Dynamic Pressure.*

The mock-up was first subjected to a structural pre-load of 50% of the design pressure (25 psf [1.20 kPa] followed by air leakage and water penetration testing, which was used to establish baseline performance. The mock-up was then subject to full structural design pressure of 50 psf (2.40 kPa) and re-tested for water penetration and air leakage (see Table 1 for the test protocol).

The water testing included a two-hour water penetration test at a test pressure of 6.24 psf (299 Pa) in accordance with International Building Code requirements for barrier exterior wall systems. The mock-up was also subjected to a series of 15 minute water penetration tests with static test pressures of 8, 10, and 12 psf (383, 479, and 575 Pa), and a dynamic water penetration test at a 12 psf (575 kPa) test pressure.

Following completion of all tests, sections of the exterior sealant were removed from the panel-to-panel and electrical box sealant joints. The water testing was then re-run to evaluate the impact of real world conditions where the sealant installation or maintenance of the joints may be imperfect.

[2] Ref to IBC 2009, 1403.2

TEST PROTOCOL
a. Structural pre-set. ASTM E330 @ 50% (25 PSF) b. Air Leakage (ASTM E283) @ 6.24 psf. c. Static Water Resistance (ASTM E331) 2 hour test @ 6.24 psf d. Static Water Resistance (ASTM E331) 15 minute test @ 8, 10 and 12 psf. e. Dynamic Water Resistance (AAMA 501.1) @ 12 psf. f. Structural Performance @ 100% Design Pressure (ASTM E330). (50 PSF) g. Static Water Resistance (ASTM E331) 2 hour test @ 6.24 psf h. Static Water Resistance (ASTM E331) 15 minute test @ 8, 10 and 12 psf. i. Remove random sections of exterior sealant and Repeat Static Water Resistance (ASTM E331) Two hour test @ 6.24 PSF, 15 minute test at 8, 10, and 12 psf. j. Structural Performance @ 150% Design Pressure (ASTM E330). (75 PSF)

Table 1: Test Protocol

Limitations of the Test Methodology

The tested assembly was not subjected to any lateral racking to simulate the effects of inter story drift caused by seismic and/or wind events, and the tested assembly did not include any horizontal panel-to-panel joints.

Laboratory Test Results

The following summarizes the laboratory test results. Full test results are available in the test reports prepared by ATI.

- Structural Testing: The mock-up passed all structural testing without evidence of cracking in the EIFS, failure of the panel structure, or any other signs of distress
- Air Leakage Testing: Air leakage rates of < 0.01 cfm/ft^2 (0.05 L/s•m^2). This compares favorably with allowable air barrier assembly air leakage rates of 0.04 cfm/ft^2 (0.2 L/s•m^2) per the requirements of the 2012 International Energy Conservation Code (IECC) Chapter 4[3]
- Water Penetration Testing: A leak occurred beneath the window during the initial 2-hour water test, with re-occurrence during the 15 minute static, and dynamic tests

Water was observed to be leaking into the stud space beneath the window at the window sill pan fastener locations. The water was observed on the inside face of the exterior sheathing. The source of this water leakage was traced to sill pan fasteners that penetrated the Sto Gold Coat at the sill (Photo 12).

[3] Ref to IECC 2012, C402.4.1.2.2

Photo 12: Water leaking through fastener penetration through Sto Gold Coat at sill

Due to the presence of the interior sealant joint between the sill pan and rough opening it was not possible during the initial testing to verify if water had leaked through the sill pan itself or through the perimeter sealant joint between the sill pan and the EIFS. Removal of sealant following testing confirmed that water had leaked into the rough opening beneath the sill pan (Photo 13). Additional testing was conducted to further evaluate the window sill/sealant interface.

Photo 13: Sealant removed after testing showing water leakage into rough opening beneath sill pan

Additional Laboratory Testing

A re-test of the static water penetration testing was conducted using a single EIFS panel, the same window, and a single stage exterior sealant beneath the sill pan to allow further review of the window sill condition (Photo 14). The structural attachment of the window was modified for the re-test with the window anchored at the jambs and the screws removed from the sill pan (Photo 15.)

Photo 14: Testing of a single EIFS panel

Photo 15: Modified structural attachment, window anchored by clip angles at jamb

During the re-test water was observed to be dripping from the sill pan into the rough opening at the sill pan end dams. This water leak was inboard of the plane of the exterior sheathing. A tracer die was used to confirm that the sill pan itself was the source of the water leakage into the rough opening (Photo 16).

Photo 16: Water leaking from sill pan, source confirmed using tracer die

There was no leakage through the EIFS system or at the interfaces between the EIFS and the window. The additional laboratory testing confirmed that the source of water leakage was deficient sealing of the sill pan end dams.

Discussion

The testing demonstrated that the StoPanel Classic provides a watertight and airtight wall assembly. The testing also demonstrated that the dual stage sealant joints used for the panel-to-panel interfaces and for the electrical box interface provide a durable watertight assembly even considering the potential for imperfect installation or maintenance.

The water leaks at the window sill demonstrate the importance of the window system in maintaining a water tight wall assembly. The initial leaks were caused by a poor (although somewhat common) window installation methodology of attaching the window sill pan flashing with fasteners penetrating through the sill pan and rough opening sill. The leak during the re-test was caused by a defect with the window sill pan end dams.

The window system leaks through the sill pan fasteners in the rough opening beneath the window were a result of window system defects and would not have been mitigated by a drainable EIF system or any other cladding system. The window sill pan leaks demonstrate the importance of proper window system detailing and installation regardless of the wall system used, and the importance of verifying window system design, installation, and detailing through tests to understand potential leak paths and how they can be eliminated.

Although thermal modeling was not included as part of this white paper, it is worth noting that the EIFS cladding is adhesively attached and does not have any mechanical attachments that would create a thermal bridge. The panelized EIFS provides continuous insulation over a steel stud assembly without any thermal bridges due to cladding attachments. As energy codes become more stringent the ability to provide continuous insulation without thermal bridging will increase in importance.

The following is a summary of the attributes and benefits of a panelized EIFS cladding:

1. Improved quality control by fabrication in a factory setting.
2. Reduced construction schedule and faster “dry-in” due to offsite fabrication
3. Lightweight exterior cladding system
4. Truly continuous insulation without thermal bridges
5. Durable weather seal and internal air seal provided by dual stage sealant at panel joints
6. Continuous air barrier with very low air leakage rates
7. EIFS provides a wide range of aesthetic design flexibility

Given these benefits, panelization with EIFS that includes mock-up testing of the integrated wall assembly components, is a sensible way to comply with today’s building code requirements and to meet building owner demands for high quality construction, non-leaky buildings, and early dry-in of the building enclosure.

Chris Norris is a Building Science Specialist with Morrison Hershfield. He leads new construction and retrofit building enclosure projects across the country.

EIFS Projects	Address	Manufacturer
Las Vegas Strip - from North to South		
Stratosphere	2000 Las Vegas Blvd.	Dryvit
Allure Condos	200 W. Sahara Blvd.	Dryvit
Sky Place Condos	2700 Las Vegas Blvd.	Sto Corp
Circus Circus	2880 Las Vegas Blvd.	BASF
Wynn "Encore" Night Club, Switch Beach Club	3121 Las Vegas Blvd.	Parex
Wynn Hotel	3131 Las Vegas Blvd.	Sto Corp
Wynn Resorts (low rise)	3131 Las Vegas Blvd.	Dryvit
Fashion Show Mall	3200 Las Vegas Blvd.	BASF
Treasure Island	3300 Las Vegas Blvd.	Dryvit
Palazzo	3325 Las Vegas Blvd.	Sto Corp
Venetian	3355 Las Vegas Blvd.	Dryvit
Sands Expo	3355 Las Vegas Blvd.	Sto Corp
Harrah's	3475 Las Vegas Blvd.	Dryvit
Planet Hollywood	3500 Las Vegas Blvd.	Dryvit
Caesar's Palace	3570 Las Vegas Blvd.	Dryvit
The Forum Shops at Caesar's Palace	3570 Las Vegas Blvd.	BASF
Hilton Grand Vacation Club	3575 Las Vegas Blvd.	Dryvit
Bellagio	3600 Las Vegas Blvd.	Dryvit
Paris	3655 Las Vegas Blvd.	Dryvit
Cosmopolitan Resort (low rise)	3700 Las Vegas Blvd.	Dryvit
City Center (low rise)	3730 Las Vegas Blvd.	Dryvit
Monte Carlo	3770 Las Vegas Blvd.	Sto Corp
New York New York	3790 Las Vegas Blvd.	Dryvit
MGM Grand + Convention Center	3799 Las Vegas Blvd.	Sto Corp
Mandalay Bay	3950 Las Vegas Blvd.	Sto Corp
Las Vegas Boulevard - South		
Texas De Brazil	6533 Las Vegas Blvd.	Parex
Town Square	6605 Las Vegas Blvd.	Sto Corp
South Point	9777 Las Vegas Blvd.	Sto Corp
Grandview Hotel	9940 Las Vegas Blvd.	Sto Corp
Fremont Street Area		
The Golden Nugget Tower and renovations	129 E. Freemont Street	Dryvit
Lou Ruvo Brain Center	888 West Bonneville	Dryvit
Smith Center for the Performing Arts	361 Symphony Park Avenue	Dryvit
World Market Center	495 S. Grand Central Parkway	Dryvit /Sto
Additional EIFS Projects in Las Vegas		
Embassy Suites	3600 Paradise Road	Parex
Doubletree Club Hotel	7210 Pollock Drive	Parex
Fairfield Inn	3850 South Paradise Road	Sto Corp
Grand Chateau	75 E. Harmon Avenue	Sto Corp
Hampton Inn Hotel	7100 Cascade Valley Court	Parex
Panorama	4525 Dean Martin Drive	Sto Corp
The Palms (Tower One and Casino)	4321 W. Flamingo Road	BASF
The Palms	4321 W. Flamingo Road	Sto Corp
Rio Hotel	3700 W. Flamingo Road	BASF

10th & Marquette Development

10th Street Elevation

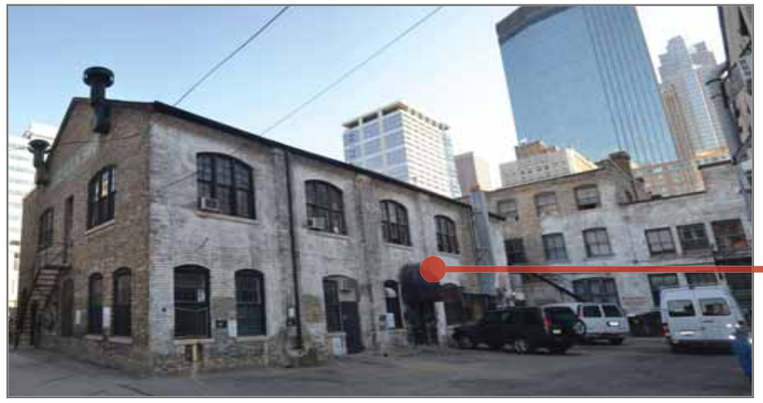

Alley View of Historic Building

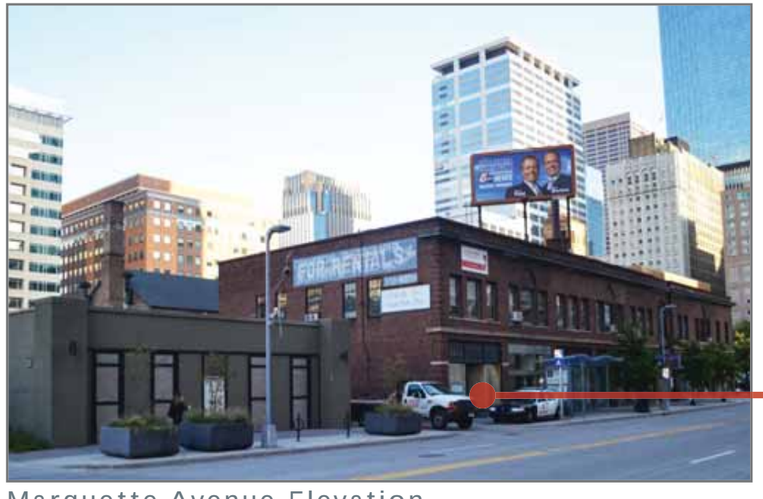

Marquette Avenue Elevation

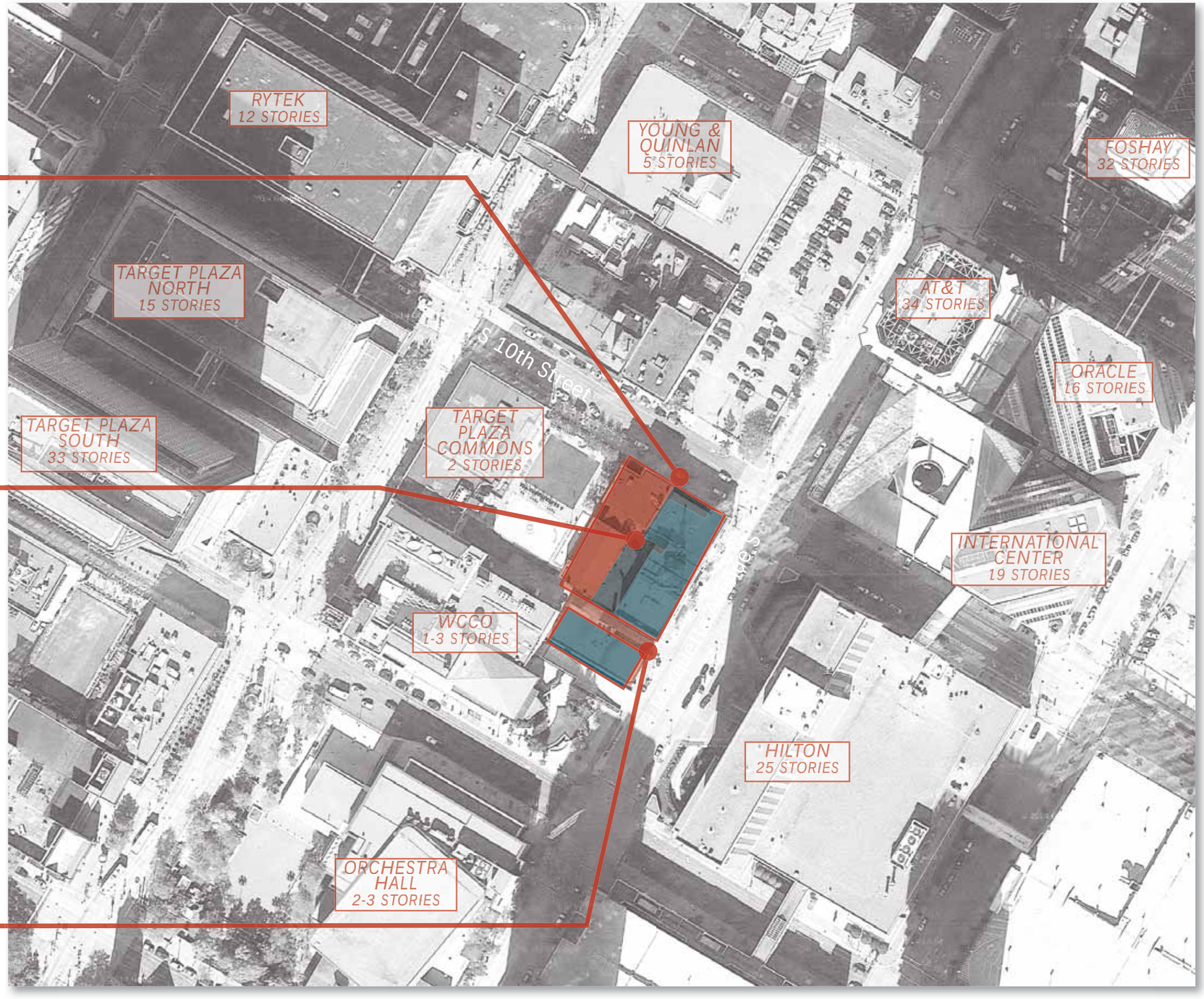

Existing Conditions

06/08/2015

PrattOrdway PROPERTIES · CITY · BKV GROUP

10th & Marquette Development

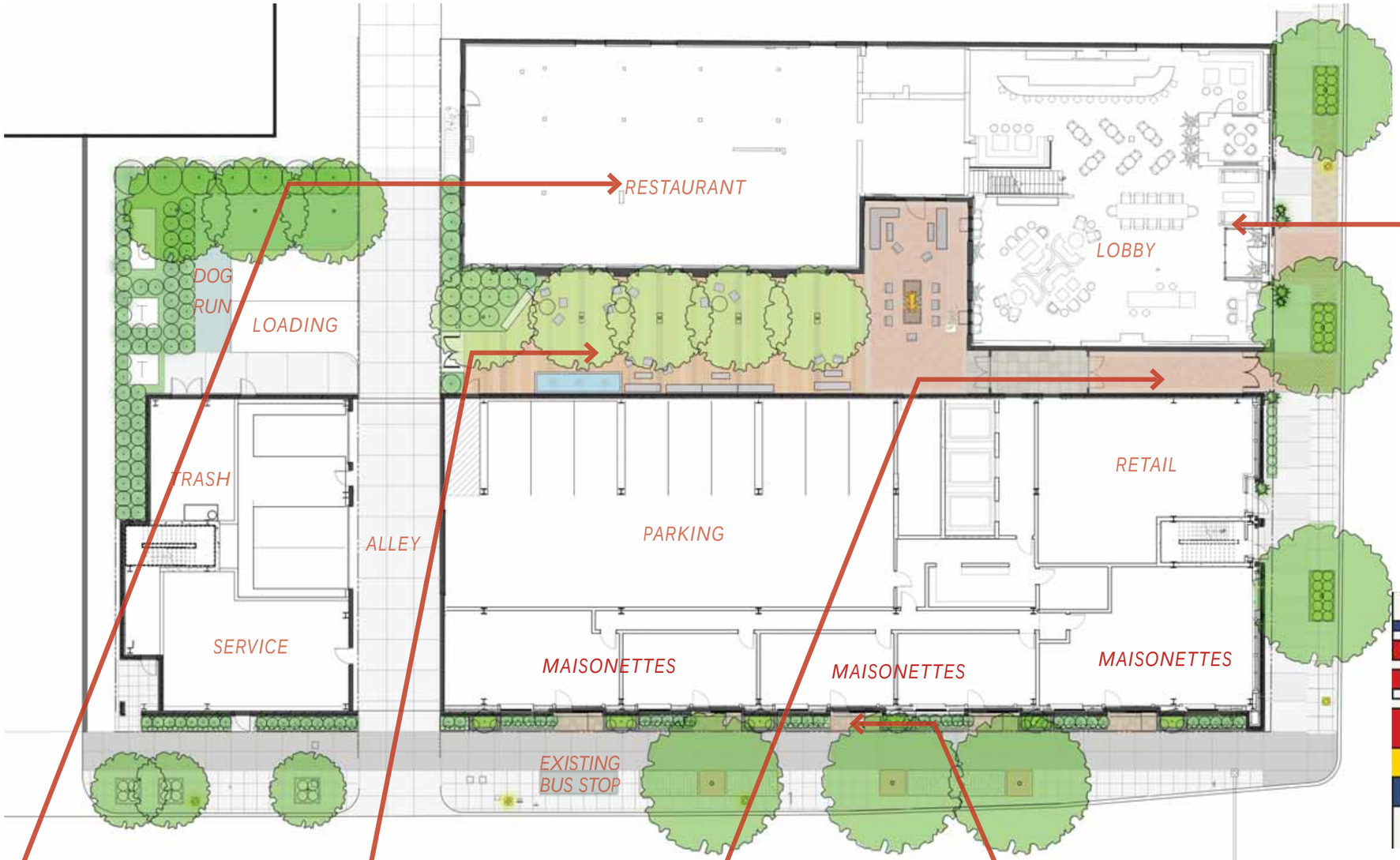

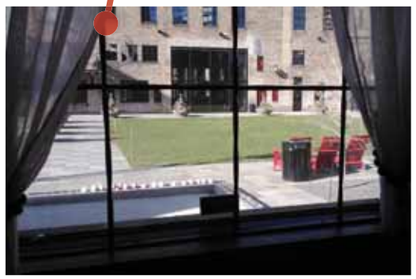

PrattOrdway PROPERTIES CITY BKV GROUP

06/08/2015

10th & Marquette Development

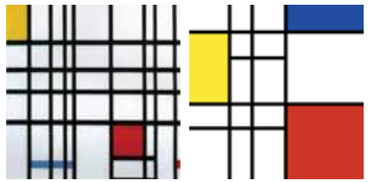

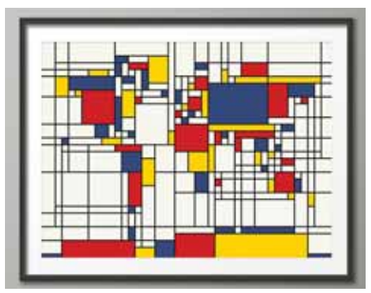

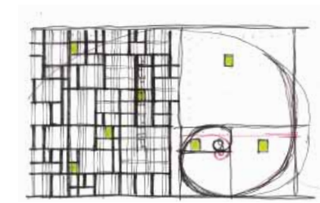

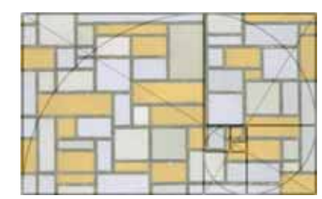

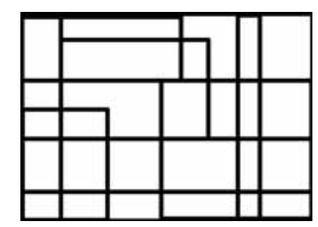

06/08/2015

10th & Marquette Development

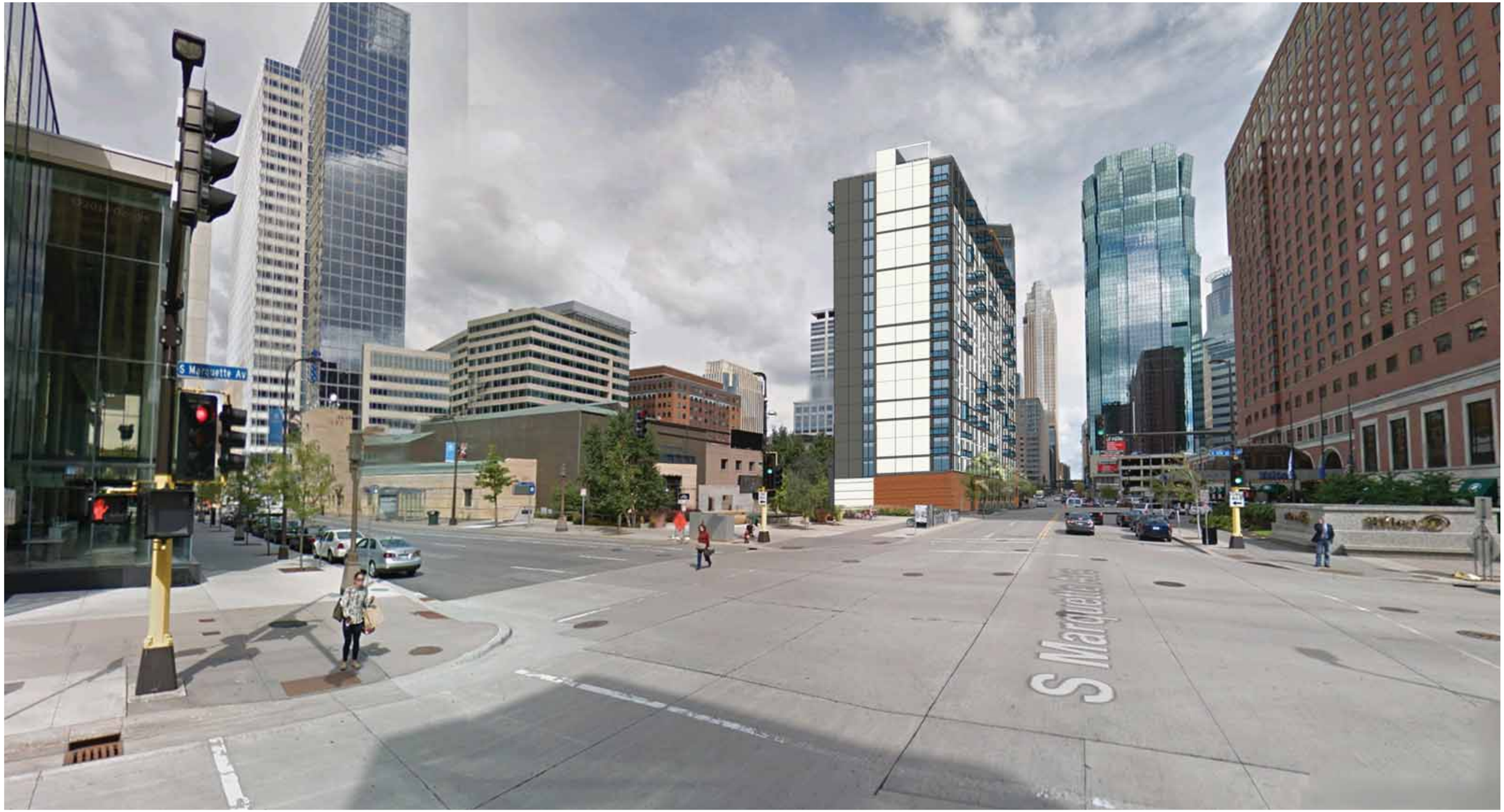

06/08/2015

PrattOrdway PROPERTIES

CITY™ BKV GROUP

10th & Marquette Development

06/08/2015

10th & Marquette Development

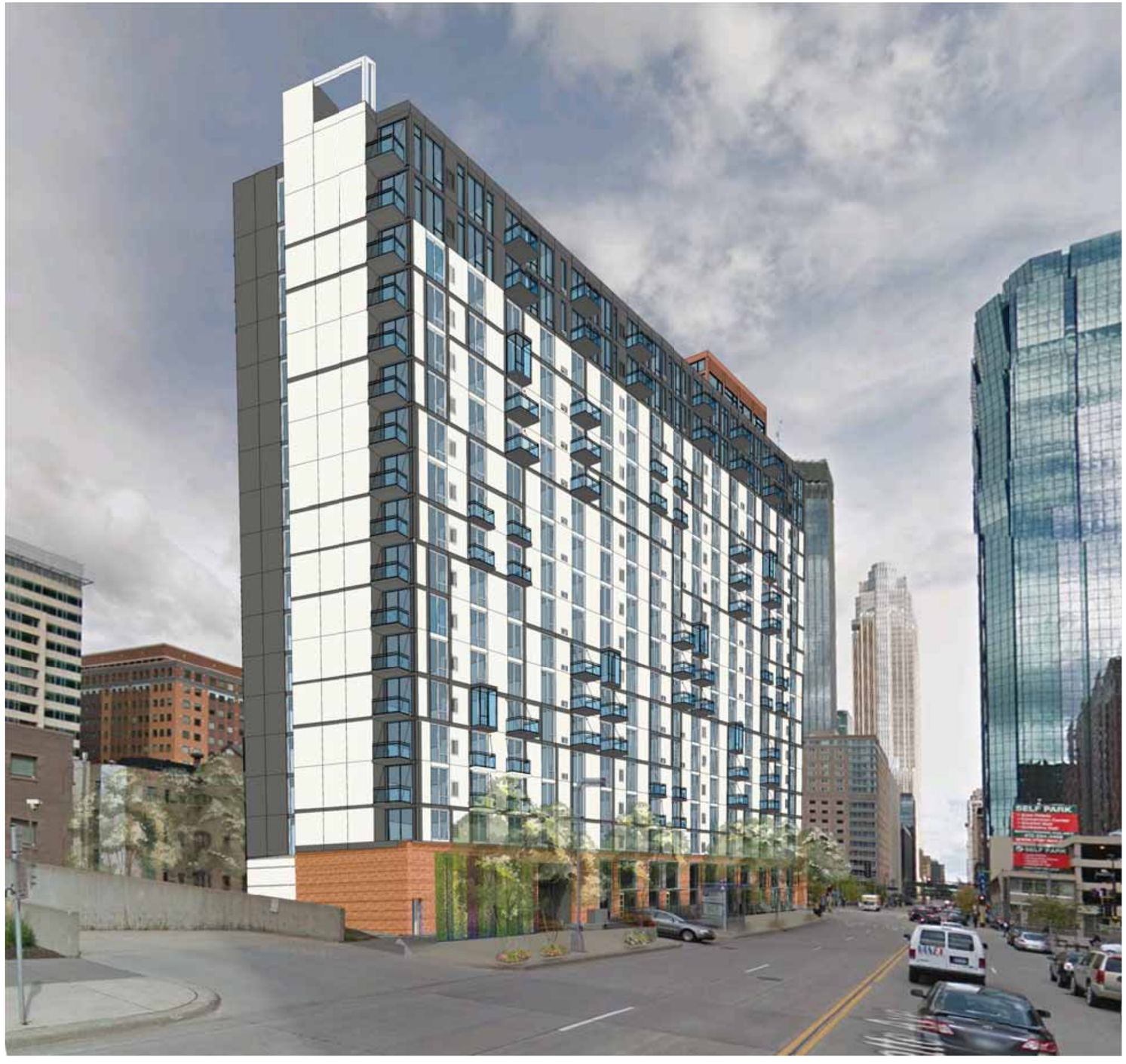

06/08/2015

PrattOrdway PROPERTIES

CITY BKV GROUP

10th & Marquette Development

06/08/2015

10th & Marquette Development

06/08/2015

10th & Marquette Development

STREETSCAPE/ WALK-UP TOWNHOMES
PEDESTRIAN-FRIENDLY ENVIRONMENT

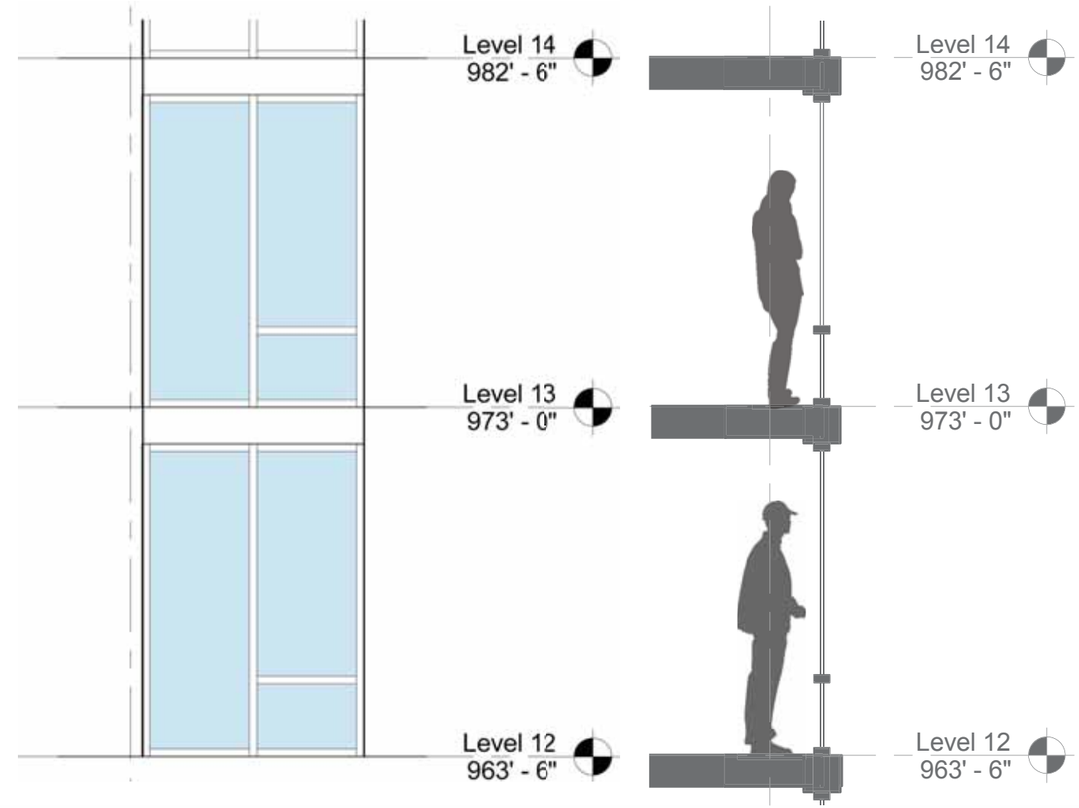

Handicraft

46.4%

Glazing Percentage

- Glazing percentage equal to or greater than:
  The Nic, 4Marq, and Latitude 45
- Patterning of facade not shown for diagram purposes only.

Recent Development Glazing Comparison:

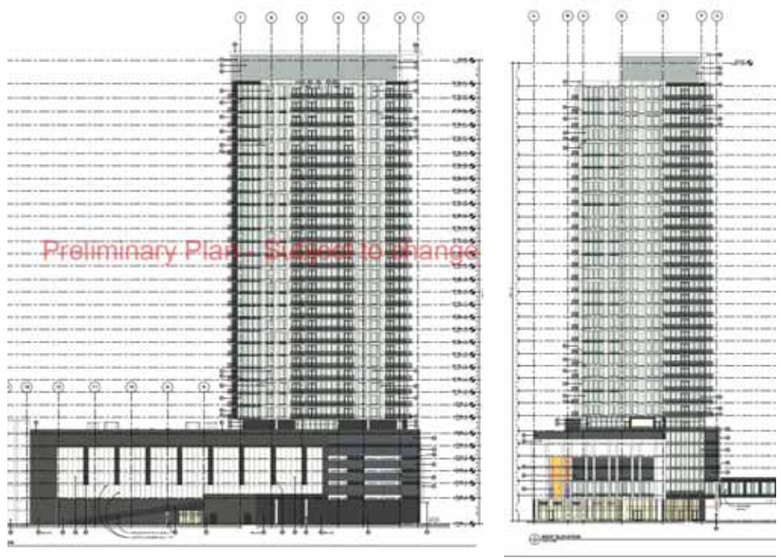

The Nic

46.4% - 47.6%

Glazing Percentage

4Marq

35.7% - 36%

Glazing Percentage

Latitude 45

35% - 40%

Glazing Percentage

10th & Marquette Development

CITIZEN M - LONDON

MONDARIAN - SOHO

10th & Marquette Development

10th & Marquette Development

PrattOrdway PROPERTIES

CITY™ BKV GROUP

10th & Marquette Development

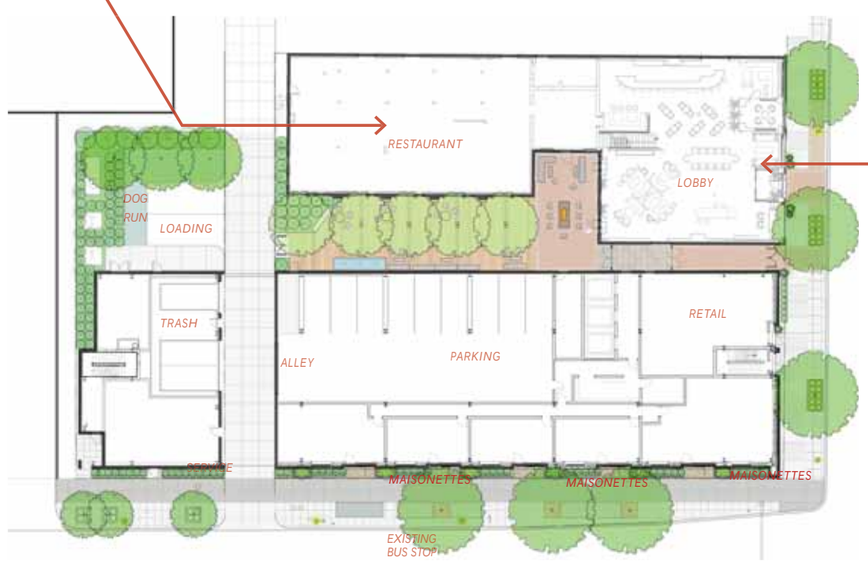

UPSCALE APARTMENTS
HISTORIC REHABILITATION
CLASSIC, TIMELESS DESIGN

06/08/2015

PrattOrdway PROPERTIES

CITY™

BKV GROUP

10th & Marquette Development

10th & Marquette Development

View from Courtyard

5/27/2015

10th & Marquette Development

View from 10th street

PrattOrdway PROPERTIES VILLAGEGREEN CITY™ BKV GROUP

10th & Marquette Development

Section through link