CPED STAFF REPORT

Prepared for the City Planning Commission

CPC Agenda Item #7
May 11, 2015
BZZ-7068 and PL-288

LAND USE APPLICATION SUMMARY

Property Location: 316 Third Avenue North
Project Name: North Loop Green PUD/T3 – Second Phase of the PUD
Prepared By: Hilary Dvorak, Principal Planner, (612) 673-2639
Applicant: Hines North Loop Green LLC
Project Contact: Bob Pfefferle with Hines
Request: To construct a new office building with ground floor commercial space.
Required Applications:

Conditional Use Permit	To amend a planned unit development (BZZ-5484) to allow for Phase II - a new office building with ground floor commercial space.
Conditional Use Permit	For a surface parking lot in the DP Downtown Parking Overlay District.
Variance	To increase the Floor Area Ratio of the building from 4.8 to 5.32.
Site Plan Review	For a new office building with ground floor commercial space.
Preliminary and Final Plat	PL-288.

SITE DATA

Existing Zoning	B4S-1 Downtown Service District DP Downtown Parking Overlay District
Lot Area	Lot = 44,056 square feet / 1.01 acres PUD = 203,448 square feet / 4.67 acres
Ward(s)	3
Neighborhood(s)	North Loop
Designated Future Land Use	Mixed Use
Land Use Features	Commercial Corridor (Washington Avenue) Growth Center (Downtown)
Small Area Plan(s)	North Loop Small Area Plan

Date Application Deemed Complete	March 18, 2014	**Date Extension Letter Sent**	April 27, 2015
End of 60-Day Decision Period	May 17, 2014	**End of 120-Day Decision Period**	July 16, 2015

BACKGROUND

SITE DESCRIPTION AND PRESENT USE. The property is located in Downtown Minneapolis. The site is landlocked between Dock Street Flats and the I-94 Viaducts and between the Burlington Northern Santa Fe railroad tracks and Dock Street, a private road. The site is currently occupied by a surface parking lot.

SURROUNDING PROPERTIES AND NEIGHBORHOOD. The PUD site is surrounded by residential developments, office buildings, commercial businesses, interstate viaducts, the railroad corridor, the Cedar Lake Trail and surface parking lots. The site is located in the North Loop neighborhood.

PROJECT DESCRIPTION. The site is located within the boundaries of the North Loop Green PUD. The boundaries of the PUD extend from Washington Avenue North to 5th Street North and from the railroad tracks to Dock Street, a private road. The first phase of the PUD, Dock Street Flats, was reviewed and approved by the City of Minneapolis in 2012. As part of the first phase of the PUD the private road was built which extends from Washington Avenue North, on the north end of the PUD, into the site. Dock Street will be utilized to access this proposed phase of the PUD and subsequent phases as none of the remaining parcels within the PUD have street frontage.

Accessory parking lots of not more than 20 spaces are allowed as a conditional use in the DP Downtown Parking Overlay District. The existing Union Plaza building, which is part of the PUD, currently has 22 surface parking spaces located adjacent to the building. As a result of the proposed replatting and the realignment of Dock Street, the 22 surface parking spaces will be relocated and reduced to 20 parking spaces. These parking spaces are not located on the T3 lot. A conditional use permit is required for the relocation of the 20 surface parking stalls.

The applicant is proposing to construct a new seven-story, approximately 235,000 square foot office building with ground floor commercial space and one level of underground parking. The building will be located between Dock Street Flats and the I-94 viaduct. The building will be constructed of heavy timber. The exterior materials proposed for the building include COR-TEN corrugated panel, COR-TEN metal plank and glass.

The applicant had requested a continuance from the April 27, 2015, City Planning Commission meeting in order to allow more time to work out some issues with Hennepin County and the Minnesota Department of Transportation as they relate to the adjacent railroad tracks, drainage and the public bike and pedestrian trails. It is CPED's understanding that these issues have been worked out and are satisfactory to all parties.

ENVIRONMENTAL ASSESSMENT WORKSHEET (EAW): The applicant owns approximately seven acres of land located between Washington Avenue North and 5th Street North and between Third Avenue North and the Burlington Northern Santa Fe railroad corridor. Given the potential amount of development (more than 375 total dwelling units) that could occur on all of the land, the applicant submitted an EAW to the City of Minneapolis in 2011. On October 5, 2011, the Minneapolis City Council determined that the project does not have the potential for significant environmental effects and therefore no Environmental Impact Statement (EIS) was required.

TRAVEL DEMAND MANAGEMENT PLAN (TDMP) AND TRAFFIC IMPACT STATEMENT: A TDMP for the entire PUD was completed as part of the EAW process. This TDMP was approved in June of 2011. As a condition of the TDMP, a specific TDMP for each phase of the PUD was required to be completed so specific strategies for each phase could be identified. The TDMP for the T3 phase of the PUD has been completed and has been approved by both Public Works and CPED. A copy of the TDMP is attached to this report.

RELATED APPROVALS. In 2012, the City Planning Commission approved land use applications for the first phase of the North Loop Green PUD which included a new six-story residential building near Washington Avenue North. Also in 2012, the Heritage Preservation Commission approved a Certificate of Appropriateness application for the new construction. In February of this year, the Heritage Preservation Commission approved a Certificate of Appropriateness application for the proposed T3 development.

PUBLIC COMMENTS. Comment letters have been submitted regarding this development. Any additional correspondence received prior to the public meeting will be forwarded on to the Planning Commission for consideration.

ANALYSIS

CONDITIONAL USE PERMIT

The Department of Community Planning and Economic Development has analyzed the application to amend a planned unit development (BZZ-5484) to allow for Phase II - a new office building with ground floor commercial space based on the following findings:

1. *The establishment, maintenance or operation of the conditional use will not be detrimental to or endanger the public health, safety, comfort or general welfare.*

   The establishment of the second phase of a PUD that includes a new approximately 235,000 square foot office building with ground floor commercial space and one level of underground parking will not be detrimental to or endanger the public health, safety, comfort or general welfare. The proposed development will replace a surface parking lot. Constructing this development will provide activity on the site during the daytime hours which will improve the overall area.

2. *The conditional use will not be injurious to the use and enjoyment of other property in the vicinity and will not impede the normal and orderly development and improvement of surrounding property for uses permitted in the district.*

   The establishment of the second phase of a PUD that includes a new approximately 235,000 square foot office building with one level of underground parking will not be injurious to the use and enjoyment of other property in the vicinity or impede the normal or orderly development and improvement of surrounding property. Surrounding uses include residential developments, office buildings, commercial businesses, interstate viaducts, the railroad corridor, the Cedar Lake Trail and surface parking lots. The proposed development will complement the existing uses in the area.

   On the proposed T3 site is an existing dog run that was constructed as part of the first phase of the PUD. The applicant is proposing to move it to the southwest side of the Dock Street Flats building. Access to the dog run would be near the Cedar Lake Trail access. The applicant is proposing to fence-in the dog run. The area that would be fenced-in contains landscaping. Staff has some reservations about locating the dog run in this area but there are very few places for it to be located near the Dock Street Flats building. CPED staff is recommending that the applicant continue to work with staff on the fence design, the location of the fence and the landscape plan.

3. *Adequate utilities, access roads, drainage, necessary facilities or other measures, have been or will be provided.*

   The Public Works Department has reviewed the preliminary plan and will review the final plan for compliance with standards related to access and circulation, drainage, and sewer/water connections. The applicant will be required to continue to work closely with the Public Works Department, the

Plan Review Section of CPED and the various utility companies during the duration of the development should the applications be approved. This would be required to ensure that all procedures are followed and that the development complies with all city and other applicable requirements. The applicant is aware that the final plans are expected to incorporate any applicable comments or modifications as required by the Public Works Department.

As part of the development, Dock Street, the private road that was constructed as part of the first phase of the PUD, will be extended around the southeast side of the T3 building and will connect to a second access point to the site from Third Avenue North. Dock Street is open to the public although it is a private road. When subsequent phases of the PUD are constructed Dock Street will be extended accordingly.

4. *Adequate measures have been or will be taken to minimize traffic congestion in the public streets.*

There is no minimum parking requirement for any use in the B4S-1 zoning district. A total of 64 parking spaces will be provided within the building. All 64 spaces will be designated for the office tenants within the building.

The minimum bicycle parking requirement for the development is four spaces. There will be a total of 100 bicycle racks provided within the building and 14 bicycle racks provided around the perimeter of the building. The bicycle racks provided inside the building are for the office tenants.

The loading space requirement for the development is two large (12 feet by 50 feet) loading spaces. There will be one small loading space provided within the building. The loading space will be located on the southwest side of the building.

The applicant has completed a TDMP for this phase of the PUD. There are several implementation measures that the applicant has committed to executing as part of the build out of the proposed office building. Below is a list of the conditions that CPED is recommending be conditions of approval for the conditional use permit:

- The property manager will provide preferred parking in the parking garage for registered employer carpools/vanpools.
- The owner will provide a connection through the T3 Office Project site for bicycle access to the Cedar Lake Trail for both employees and the public.
- The owner will provide within the T3 Office Project secure bicycle storage in the bike room of the building for employees and patrons. A minimum of one hundred (100) bike spaces will be provided between the bike room and outdoor racks.
- The owner/property manager will implement a shared bicycle program for the employees of the T3 Office Project. The building will initially have six (6) bicycles docked in the parking garage which residents will be able to check out and return on an as-needed/as-available basis.
- All parking provided in the subterranean garage and project site of the T3 Office Project is specifically designated for employees of T3 Office Project, guests, and patrons. No general public parking will be available at the project site.

5. *The conditional use is consistent with the applicable policies of the comprehensive plan.*

The proposed development would be consistent with the following policies of *The Minneapolis Plan for Sustainable Growth*:

Land Use Policy 1.1: Establish land use regulations to achieve the highest possible development standards, enhance the environment, protect public health, support a vital mix of land uses, and promote flexible approaches to carry out the comprehensive plan.

1.1.3 Encourage the use of flexible regulatory options that promote high quality development, such as the Planned Unit Development (PUD) tool.

1.1.4 Support context-sensitive regulations for development and land use, such as overlay districts, in order to promote additional land use objectives.

1.1.5 Ensure that land use regulations continue to promote development that is compatible with nearby properties, neighborhood character, and natural features; minimizes pedestrian and vehicular conflict; promotes street life and activity; reinforces public spaces; and visually enhances development.

Land Use Policy 1.3: Ensure that development plans incorporate appropriate transportation access and facilities, particularly for bicycle, pedestrian, and transit.

1.3.1 Require safe, convenient, and direct pedestrian connections between principal building entrances and the public right-of-way in all new development and, where practical, in conjunction with renovation and expansion of existing buildings.

1.3.2 Ensure the provision of high quality transit, bicycle, and pedestrian access to and within designated land use features.

Land Use Policy 1.13: Support high density development near transit stations in ways that encourage transit use and contribute to interesting and vibrant places.

1.13.1 Encourage pedestrian-oriented services and retail uses as part of higher density development near transit stations.

1.13.3 Discourage uses that diminish the transit and pedestrian character of areas around transit stations, such as automobile services, surface parking lots, and drive-through facilities.

1.13.4 Encourage architectural design, building massing and site plans to create or improve public and semi-public spaces near the station.

1.13.6 Encourage investment and place making around transit stations through infrastructure changes and the planning and installation of streetscape, public art, and other public amenities.

Land Use Policy 1.15: Support development of Growth Centers as locations for concentration of jobs and housing, and supporting services.

1.15.1 Support development of Growth Centers through planning efforts to guide decisions and prioritize investments in these areas.

1.15.2 Support the intensification of jobs in Growth Centers through employment generating development.

6. *The conditional use shall, in all other respects, conform to the applicable regulations of the district in which it is located.*

If the requested land use applications are approved, the proposal will comply with all provisions of the B4S-1 Downtown Service District and the DP Downtown Parking Overlay.

Findings Required for Planned Unit Developments:

A. The planned unit development conforms to the applicable standards for alternatives and amenities. All planned unit developments shall provide at least one amenity or a combination of amenities that total at least 10 points, beyond those required for any alternatives. For each alternative requested, amenities shall total at least five points.

Alternatives requested:

Bulk regulations, floor area ratio (FAR).

For a non-residential building in the B4S-1 zoning district the minimum FAR is 2.0 and the maximum FAR is 4.0. The proposed FAR of the building is 5.32. The maximum FAR increase that can be authorized through the PUD is 20 percent or an FAR of 4.8. The applicant is proposing to provide five points worth of amenities to allow an increase in the maximum FAR. In addition, the applicant has applied for a variance to increase the FAR of the building from 4.8 to 5.32.

Off-street parking and loading.

There is no minimum parking requirement for any use in the B4S-1 zoning district. A total of 64 parking spaces will be provided within the building. The loading space requirement for the development is two large (12 feet by 50 feet) loading spaces. There will be one small loading space provided within the building. The applicant is seeking an exception to the loading space requirement; however, no amenities are required to be provided for a reduction in the loading space requirement.

In determining the minimum and maximum number of off-street loading spaces required, the city planning commission shall consider, but not be limited to, the loading requirements for the individual uses within the planned unit development as specified in Chapter 541, Off-Street Parking and Loading, the nature of the uses and population served, documentation supplied by the applicant regarding the actual loading demand for the proposed use, the potential for shared loading, and the use of alternative forms of transportation.

The applicant is proposing to have one small loading space provided within the building. The applicant has indicated that the typical loading needs for the development will be for delivery of office supplies and retail goods, building maintenance and trash pick-up. These types of loading activities can be accommodated with a small loading space. Large semi-truck deliveries will most often occur when tenants move into the building. The applicant has indicated that semi-trucks can park on the private street or underneath the I-94 Viaducts when needed.

Points required for alternatives:

- Bulk regulations, FAR – **5 points.**

  Total = 5 points.

Phasing plan.

Phase	Approval Date	Alternative	Amenity
Phase I	March 5, 2012	• Establishment of the PUD • Yards	• Underground parking • Pedestrian Improvements • Decorative fencing • Enhanced exterior lighting • Enhanced landscaping • Preservation of the character-defining features in the historic district
Phase II	April 27, 2015	• Maximum FAR	• Underground parking

Amenities provided:

The applicant is proposing the following amenities from Table 527-1, Amenities:

Underground parking (10 points) – 10 points.
All parking shall be located underground. Where the grade of the site slopes significantly, all parking shall be enclosed in a floor level of the building that does not meet the definition of a story. Further, exterior parking garage walls adjacent to the public street shall not extend more than three (3) feet above the adjacent grade measured from the finished floor of the first level.

All of the parking associated with the proposed building will be located underground. There will be a total of 64 parking spaces provided in one level of underground parking. The 20 surface parking spaces for the existing Union Plaza building are not located on the T3 lot.

Table 1. Amenity Points Summary

Amenity	Points Requested by Applicant	Points Recommended by Staff
Underground parking	10 points	10 points
Total	10 points	10 points

C. The planned unit development conforms to the required findings for a planned unit development:

(1) That the planned unit development complies with all of the requirements and the intent and purpose of this chapter. In making such determination, the following shall be given primary consideration:

a. The character of the uses in the proposed planned unit development, including in the case of residential uses, the variety of housing types and their relationship to other site elements and to surrounding development.

Phase I of the PUD was a residential development with ground floor commercial space located along Washington Avenue North. The building was designed with the entrance to the residential portion of the building towards the interior of the larger PUD site. This was done to bring activity into the site since the southern portion of it was a surface parking lot. The proposed phase of the PUD is an office development with ground floor commercial space. Since the building is landlocked the proposed uses within the building will create activity during the day and into the evening hours. Surrounding uses include residential developments, office buildings, commercial

businesses, interstate viaducts, the railroad corridor, the Cedar Lake Trail and surface parking lots. The proposed development will complement the existing uses in the area.

b. *The traffic generation characteristics of the proposed planned unit development in relation to street capacity, provision of vehicle access, parking and loading areas, pedestrian access, bicycle facilities and availability of transit alternatives.*

The TDMP that was completed for this development concludes that the existing street capacity is adequate to support the traffic that will be generated by this development. A copy of the TDMP is attached to this report. There are several implementation measures that the applicant has committed to executing as part of the build out of this phase of the PUD.

c. *The site amenities of the proposed planned unit development, including the location and functions of open space, the preservation or restoration of the natural environment or historic features, sustainability and urban design.*

The site amenities that were provided as part of the first phase of the PUD included underground parking, pedestrian improvements, decorative fencing, enhanced exterior lighting, enhanced landscaping, a recycling storage area and preservation of character-defining features in the historic district. The amenity that is being provided as part of this phase is underground parking.

d. *The appearance and compatibility of individual buildings and parking areas in the proposed planned unit development to other site elements and to surrounding development, including but not limited to building scale and massing, microclimate effects of the development, and protection of views and corridors.*

The development site is landlocked between Dock Street Flats and the I-94 Viaducts and between the railroad tracks and Dock Street. As part of the development, Dock Street, the private road that was constructed as part of the first phase of the PUD, will be extended around the southeast side of the T3 building and will connect to a second access point to the site from Third Avenue North. When subsequent phases of the PUD are constructed Dock Street will be extended accordingly.

The proposed building is not designed to resemble surrounding warehouse buildings, but is informed by the simplicity and clear functional expression of the surrounding warehouse context. The building design marries traditional, industrial proportions with modern materials and detailing. The proposed building is respectful of the neighborhood and responds to its context with a simple massing.

The exterior materials proposed for the building include COR-TEN corrugated panel, COR-TEN metal plank and glass. The building will have a strong vertical rhythm of piers. These piers frame the large window openings - generating interest and animation along the street faces, and when viewed from afar. There are two distinct patterns of window planned for the building.

e. *An appropriate transition area shall be provided between the planned unit development and adjacent residential uses or residential zoning that considers landscaping, screening, access to light and air, building massing, and applicable policies of the comprehensive plan and adopted small area plans.*

The 80-foot, former right-of-way alignment of Third Street North was preserved as part of the first phase of the PUD as it is a historic view corridor. This former right-of-way separates the existing Dock Street Flats building and the proposed T3 building.

f. *The relation of the proposed planned unit development to existing and proposed public facilities, including but not limited to provision for stormwater runoff and storage, and temporary and permanent erosion control.*

The Public Works Department has reviewed the preliminary plan and will review the final plan for compliance with standards related to access and circulation, drainage, and sewer/water connections. The applicant will be required to continue to work closely with the Public Works Department, the Plan Review Section of CPED and the various utility companies during the duration of the development should the applications be approved. This would be required to ensure that all procedures are followed and that the development complies with all city and other applicable requirements. The applicant is aware that the final plans are expected to incorporate any applicable comments or modifications as required by the Public Works Department.

g. *The consideration, where possible, of sustainable building practices during the construction phases and the use of deconstruction services and recycling of materials for the demolition phase.*

The following sustainable building practices will be utilized during construction: energy efficient HVAC and lighting systems; Xcel Energy Design Assistance Program; recycle generated waste from construction activities; use of low VOC materials and finishes for better interior environmental quality; use of regional materials and products as much as possible to reduce carbon footprint; use of sustainable materials and products, recycled content and renewable materials; underground storm water chambers will be composed of up to 30% recycled materials.

(2) *That the planned unit development complies with all of the applicable requirements contained in Chapter 598, Land Subdivision Regulations.*

As part of the first phase of the PUD the North Loop Green Plat was approved. This plat subdivided the property into two lots and six outlots to accommodate buildings and private roadways. As part of the second phase of the PUD, a new plat, North Loop Green Second Addition, has been submitted. This plat will subdivide the property into two lots and five outlots to accommodate buildings and private roadways.

CONDITIONAL USE PERMIT

The Department of Community Planning and Economic Development has analyzed the application for a surface parking lot in the DP Downtown Parking Overlay District based on the following findings:

1. *The establishment, maintenance or operation of the conditional use will not be detrimental to or endanger the public health, safety, comfort or general welfare.*

The relocation of the 20 surface parking spaces for the Union Plaza building will not be detrimental to or endanger the public health, safety, comfort or general welfare. Overall, the total amount of surface parking spaces will be reduced as a result of this development.

2. *The conditional use will not be injurious to the use and enjoyment of other property in the vicinity and will not impede the normal and orderly development and improvement of surrounding property for uses permitted in the district.*

   The relocation of the 20 surface parking spaces for the Union Plaza building will not be injurious to the use and enjoyment of other property in the vicinity and will not impede the normal and orderly development and improvement of surrounding property for uses permitted in the district. Again, the total amount of surface parking spaces will be reduced as a result of this development.

3. *Adequate utilities, access roads, drainage, necessary facilities or other measures, have been or will be provided.*

   The Public Works Department has reviewed the preliminary plan and will review the final plan for compliance with standards related to access and circulation, drainage, and sewer/water connections. The applicant will be required to continue to work closely with the Public Works Department, the Plan Review Section of CPED and the various utility companies during the duration of the development should the applications be approved. This would be required to ensure that all procedures are followed and that the development complies with all city and other applicable requirements. The applicant is aware that the final plans are expected to incorporate any applicable comments or modifications as required by the Public Works Department.

4. *Adequate measures have been or will be taken to minimize traffic congestion in the public streets.*

   The TDMP that was completed for this development concludes that the existing street capacity is adequate to support the traffic that will be generated by this development. A copy of the TDMP is attached to this report. There are several implementation measures that the applicant has committed to executing as part of the build out of this phase of the PUD.

5. *The conditional use is consistent with the applicable policies of the comprehensive plan.*

   The proposed development would be consistent with the following policies of *The Minneapolis Plan for Sustainable Growth*:

   Policy 2.8: Balance the demand for parking with objectives for improving the environment for transit, walking and bicycling, while supporting the city's business community.

   2.8.1 Implement off-street parking regulations which provide a certain number of parking spaces for nearby uses, while still maintaining an environment that encourages bicycle, pedestrian, and transit travel.

   2.8.3 Maximize the efficient use of off-street parking by developing district parking strategies in high density mixed-use areas such as Activity Centers and Growth Centers.

   2.8.4 Consider eliminating minimum parking requirements for certain small-scale uses as well as parking requirements in areas served by off-street parking facilities that are available to the general public.

   2.8.5 Continue to prohibit new commercial surface parking lots and to restrict the size of accessory surface parking lots in Downtown.

   2.8.7 Promote transit, walking, and biking as safe and comfortable transportation alternatives through reduced parking requirements, encouragement of employee transit incentive programs, and improved facilities.

6. *The conditional use shall, in all other respects, conform to the applicable regulations of the district in which it is located.*

   If the requested land use applications are approved, the proposal will comply with all provisions of the B4S-1 Downtown Service District and the DP Downtown Parking Overlay.

VARIANCE

The Department of Community Planning and Economic Development has analyzed the application for a variance to increase the Floor Area Ratio of the building from 4.8 to 5.32 based on the following findings:

1. *Practical difficulties exist in complying with the ordinance because of circumstances unique to the property. The unique circumstances were not created by persons presently having an interest in the property and are not based on economic considerations alone.*

   For a non-residential building in the B4S-1 zoning district the minimum FAR is 2.0 and the maximum FAR is 4.0. The proposed FAR of the building is 5.32. The applicant requested an exception to the zoning code through the conditional use permit for the PUD to increase the maximum FAR of the building. However, the maximum FAR increase that can be authorized through the PUD is 20 percent or an FAR of 4.8. Therefore, the applicant has applied for a variance to increase the FAR of the building from 4.8 to 5.32.

   Practical difficulties exist in complying with the ordinance because of circumstances unique to the property. The size of the lots that can be created within the PUD are restricted due to the need to develop private streets on outlots to serve the different developments. In addition, the size of the lots are further restricted by the I-94 viaducts that cut through the site. Therefore, even though the FAR of the T3 Project will be 5.32, the FAR of the first two phases of the PUD will only be 2.47 – well below the FAR limits of the zoning code. These are unique circumstances not created by the applicant.

2. *The property owner or authorized applicant proposes to use the property in a reasonable manner that will be in keeping with the spirit and intent of the ordinance and the comprehensive plan.*

   The applicant proposes to use the property in a reasonable manner that will be in keeping with the spirit and intent of the ordinance and the comprehensive plan. The site is located within a designated Growth Center (Downtown) in *The Minneapolis Plan for Sustainable Growth*. Growth Centers are locations where jobs should be concentrated through employment generating development. The proposed development proposes approximately 235,000 square feet of office space within the Growth Center.

3. *The proposed variance will not alter the essential character of the locality or be injurious to the use or enjoyment of other property in the vicinity. If granted, the proposed variance will not be detrimental to the health, safety, or welfare of the general public or of those utilizing the property or nearby properties.*

   The granting of the variance will not alter the essential character of the locality or be injurious to the use or enjoyment of other property in the vicinity. The proposed variance will not be detrimental to the health, safety, or welfare of the general public or of those utilizing the property or nearby properties. The proposed seven-story building will be similar in character to other office and mixed use buildings in the surrounding area. The development will be separated from other buildings by the private streets in the PUD and the I-94 viaducts, so the increased FAR will not overpower other properties in the vicinity.

SITE PLAN REVIEW

The Department of Community Planning and Economic Development has analyzed the application based on the required findings and applicable standards in the site plan review chapter:

1. Conformance to all applicable standards of Chapter 530, Site Plan Review.

Building Placement and Design – *Requires alternative compliance*

- The site does not have frontage on a public street so therefore the proposed building will not reinforce the street wall. However, the building does maximize natural surveillance and visibility and facilitate pedestrian access and circulation. The placement of the building on the lot does not reinforce a public street but it does reinforce Dock Street, the private street located within the development, and the Cedar Lake Trail, the public pathway adjacent to the site. The building will have entrances located on the Washington Avenue North, Third Avenue North and Cedar Lake Trail sides of the building. The entrances will connect to the proposed on-site walkways which will connect to the on-site walkways that were constructed as part of the first phase of the PUD that connect to the public sidewalk along Washington Avenue North. In addition, the building will also have large expanses of glass on all four sides which will maximize opportunities for people to observe the surrounding area. Alternative compliance is needed.
- The front of the building faces Washington Avenue North. The lot which the building will be located on has its front property line adjacent to Outlot A which was platted during the first phase of the PUD and is occupied by Dock Street and Outlot E which was platted during the first phase of the PUD and provides access to the Dock Street Flats parking garage and will also provide access to the T3 parking garage. The building wall facing this property line is located between four and ten feet from the property line. The portion of the building that is located ten feet from the property line is in the area where the main entrance is located. Alternative compliance is needed.
- The area between the building and the lot lines include walkways and landscaping.
- The site does not have frontage on a public street. However, the front of the building is oriented towards Washington Avenue North. The building will have entrances located on the Washington Avenue North, Third Avenue North and Cedar Lake Trail sides of the building. Alternative compliance is needed.
- All of the on-site parking associated with the development is located in one level of underground parking.
- There are no areas of the building that are over 25 feet in length and void of windows, entries, recesses or projections, or other architectural elements.
- The exterior materials proposed for the building include COR-TEN corrugated panel, COR-TEN metal plank and glass.
- The sides and read of the building are similar to and compatible with the front of the building.
- Plain face concrete block is not being proposed as an exterior building material.
- The windows in the building are vertical in nature and are spaced across the building walls. The minimum window percentages are not being met on the 1st floor of the building facing the Cedar Lake Trail. See **Table 1**. Alternative compliance is needed.
- More than seventy percent of the ground floor of the building facing Washington Avenue North, Third Avenue North and I-94 viaduct contains active functions. However, along the Cedar Lake Trail side of the building only 43 percent of the ground floor contains active functions. Alternative compliance is needed.
- The principal roof line of the building is flat. The majority of the buildings in the surrounding area have flat roofs.

Table 2. Percentage of Windows Required for Elevations Facing a Public Street, Sidewalk, Pathway, or On-Site Parking

	Code Requirement		Proposed	
Nonresidential Uses				
1st Floor facing Washington Avenue North	30% minimum	547 sq. ft.	38%	693 sq. ft.
2nd Floor and Above	10% minimum	217 sq. ft.	Greater than 10%	
1st Floor Facing Third Avenue North	30% minimum	252 sq. ft.	53%	462 sq. ft.
2nd Floor and Above	10% minimum	130 sq. ft.	Greater than 10%	
1st Floor Facing I-94 viaducts	30% minimum	550 sq. ft.	34%	630 sq. ft.
2nd Floor and Above	10% minimum	235 sq. ft.	Greater than 10%	
1st Floor Facing Cedar Lake Trail	30% minimum	470 sq. ft.	13%	210 sq. ft.
2nd Floor and Above	10% minimum	275 sq. ft.	Greater than 10%	

Access and Circulation – *Meets requirements*

- Although the site does not have frontage on a public street, the proposed on-site walkways will connect to the on-site walkways that were constructed as part of the first phase of the PUD that do connect to the public sidewalk along Washington Avenue North. There is also a walkway that leads from Third Avenue North into the site and there is a direct connection from the Cedar Lake Trail to the site.
- No transit shelters are proposed as part of this development.
- All of the on-site parking associated with the development is located in one level of underground parking.
- There are no public alleys located within the boundaries of the PUD.
- There is no maximum impervious surface requirement in the B4S-1 zoning district. However, according to the materials submitted by the applicant 91percent of the T3 site will be impervious (10 percent pervious).

Landscaping and Screening – *Meets requirements*

- This site is exempt from the general landscaping and screening requirements of Chapter 530, Site Plan Review as the site is located in the B4S-1 zoning district and the building is larger than 50,000 square feet.
- The zoning code requires that a seven-foot wide landscaped yard be provided when a parking or loading facility is fronting along a public street, public sidewalk or public pathway. The Cedar Lake Trail is a public pathway. Both the surface parking lot on Outlot E and the loading dock require screening from the public pathway. There is a 17-foot wide landscaped yard located between the parking lot and these areas.
- Screening three feet in height and equal to 60 percent opacity is required when a parking or loading facility is fronting along a public street, public sidewalk or public pathway. There will be landscaping located within the 17-foot wide landscaped yard that will grow to a height of three feet and be 60 percetn opaque.
- In parking lots of 10 spaces or more, no parking space shall be located more than 50 feet from an on-site deciduous tree. All of the pakring spaces located on Outlots A and E will be located within 50 feet of an on-site deciduous tree.

- Tree islands in parking lots must have a minimum width of seven feet in any direction. The tree islands located on Outlots A and E are at least seven feet in every direction.

Table 3. Landscaping and Screening Requirements

	Code Requirement	Proposed
Lot Area	--	44,056 sq. ft.
Building footprint	--	32,032 sq. ft.
Remaining Lot Area	--	12,024 sq. ft.
Landscaping Required	0 sq. ft.	4,000 sq. ft.
Canopy Trees (1: 500 sq. ft.)	0 trees	12 trees
Shrubs (1: 100 sq. ft.)	0 shrubs	87 shrubs

Additional Standards – *Meets requirements*

- All of the on-site parking associated with the development is located in one level of underground parking. Stormwater runoff from the outlots will be directed to a series of catch basins on the site.
- This development should not block views of important elements of the city. The building has been arranged so it is not located within the Third Street North right-of-way which has been identified as a historic view corridor.
- Given the placement of the building adjacent to the Cedar Lake Trail, it will shadow the trail at different times of the day for varying lengths of time depending on the season.
- This development should have minimal wind effects on the surrounding area.
- The site plan complies with crime prevention design elements as there are walkways that direct people to the building entrances, there are large windows on all sides of the building that maximize the opportunities for people to observe adjacent spaces and the public sidewalks and there are lights located near all of the pedestrian entrances and throughout the site.
- No structures will be demolished to construct the development. The site is located in the Minneapolis Warehouse Historic District, which is a designated local historic district and is listed on the National Register of Historic Places (NRHP). This area of the historic district has been identified as the Rail Yards Area in the Minneapolis Warehouse Historic District Design Guidelines. This development was reviewed and approved at the February 3, 2015, Heritage Preservation Commission meeting.

2. Conformance with all applicable regulations of the zoning ordinance.

The proposed use is *conditional* in the B4S-1 District and the DP Downtown Parking Overlay.

Off-street Parking and Loading – *Requires conditional use permit*

- There is no minimum parking requirement for any use in the B4S-1 zoning district. A total of 64 parking spaces will be provided within the building.
- Accessory parking lots of not more than 20 spaces are allowed as a conditional use in the DP Downtown Parking Overlay District. The existing Union Plaza building, which is part of the PUD, currently has 22 surface parking spaces located adjacent to the building. As a result of the proposed replatting and the realignment of Dock Street, the 22 surface parking spaces will be relocated and reduced to 20 parking spaces.
- The loading space requirement for the development is two large (12 feet by 50 feet) loading spaces. There will be one small loading space provided within the building. The applicant is

seeking an exception to the loading space requirement through the conditional use permit for the PUD.

Table 4. Vehicle Parking Requirements Per Use (Chapter 541)

	Minimum Parking Requirement	Applicable Reductions	Total Minimum Requirement	Maximum Parking Allowed	Proposed
Office	0	--	0	223	64
Commercial - retail	0	--	0	23	
Commercial – food and beverage	0	--	0	58	
Total	0	--	0	281 (maximum)	64

Table 4. Bicycle Parking and Loading Requirements (Chapter 541)

	Minimum Bicycle Parking	Minimum Short-Term	Minimum Long-Term	Proposed	Loading Requirement	Proposed
Office	4	--	--	100 long-term and 14 short-term	2 Large	1 Small
Commercial - retail					0	
Commercial – food and beverage					0	
Total	4	--	--	114	2 Large	1 Small

Building Bulk and Height – *Requires conditional use permit and variance*

- For a non-residential building in the B4S-1 zoning district the minimum FAR is 2.0 and the maximum FAR is 4.0. The proposed FAR of the building is 5.32. The applicant requested an exception to the zoning code through the conditional use permit for the PUD to increase the maximum FAR of the building. However, the maximum FAR increase that can be authorized through the PUD is 20 percent or an FAR of 4.8. Therefore, the applicant has applied for a variance to increase the FAR of the building from 4.8 to 5.32.

Table 5. Building Bulk and Height Requirements

	Code Requirement	Proposed
Lot Area	--	44,056 square feet / 1.01 acres
Gross Floor Area (GFA)	--	234,287 sq. ft.
Maximum Floor Area Ratio (GFA/Lot Area)	4.0	5.32
Maximum Building Height	No height limitation	7 stories/85 ft.

Yard Requirements – *Not applicable*

Signs – *Requires conditional use permit*

- The applicant is not proposing any signage at this time. However, given that the site does not have frontage on a public street, an amendment to the PUD for singage will be required in the future.
- Signs are subject to Chapter 543 of the Zoning Code. In the B4S zoning district one can have two-and-a-half square feet of signage for every one foot of primary building wall. Wall signs are limited to 120 square feet in size. Projecting signs are limited to 48 square feet in size. The height limitation for both wall signs and projecting signs is 28 feet. Freestanding signs are limited to 32 square feet and can be no taller than 8 feet. The zoning code also limits the number of freestanding signs on a zoning lot to one.
- At the Heritage Preservation Commission meeting in February, the applicant had requested approval of a master sign plan. The proposed signs were dimensioned and the locations of them were identified but the type of signs (materials, illumination, colors, etc.) were unknown. Given this, as a condition of approval of the Certificate of Appropriateness, the Heritage Preservation Commission did not approve any signs and requested that the applicant come back to them with a master sign plan when more details were known. They did however give a preliminary indication that they could support the proposed sign dimensions and locations, subject to review of the final sign designs. In general, the applicant requested to have three wall signs located near the top of the building. The signs would be located on the Washington Avenue North, Third Avenue North and I-94 viaduct sides of the building. Because the T3 lot does not have actual frontage on these public streets, none of these walls are considered primary building walls on which signage can be located. The proposed height would also exceed the general height limit of 28 feet. These sign locations are intended to be used to identify either an anchor tenant or the T3 building. In addition, a freestanding sign is proposed to be installed on a concrete wall near the main building entry; this signs meets the sign standards in the zoning code.

Refuse Screening – *Meets requirements*

- The trash and recycling area will be located within the building.

Screening of Mechanical Equipment – *Meets requirements*

- The rooftop mechanical equipment will be screened by a parapet wall. The two pieces of ground mounted mechanical equipment that are proposed to be located on the southwest side of the proeprty will be screened with landscaping.

Lighting – *Meets requirements with Conditions of Approval*

- A lighting plan showing footcandles was not submitted as part of the application materials. CPED is recommending that the final lighting plan conform to the standards of Chapter 535, Regulations of General Applicability.

Impervious Surface Area – *Not applicable*

Specific Development Standards – *Not applicable*

DP Overlay District Standards – *Meets requirements*

- If the requested land use applications are approved, the proposal will comply with all provisions of the DP Downtown Parking Overlay.

3. Conformance with the applicable policies of *The Minneapolis Plan for Sustainable Growth*.

The Minneapolis Plan for Sustainable Growth identifies the site as Mixed-use on the future land use map. The proposed development is consistent with the following principles and policies outlined in the comprehensive plan:

Urban Design Policy 10.1: Promote building designs and heights that enhance and complement the image and form of the Downtown skyline, provide transition to the edges of Downtown and protect the scale and quality in areas of distinctive physical or historical character.

10.1.1 Concentrate the tallest buildings in the Downtown core.

10.1.2 Building placement should preserve and enhance public view corridors that focus attention on natural or built features, such as landmark buildings, significant open spaces or water bodies.

10.1.3 Building placement should allow light and air into the site and surrounding properties.

Urban Design Policy 10.9: Support urban design standards that emphasize traditional urban form with pedestrian scale design features at the street level in mixed-use and transit-oriented development.

10.9.1 Encourage both mixed-use buildings and a mix of uses in separate buildings where appropriate.

10.9.2 Promote building and site design that delineates between public and private spaces.

Urban Design Policy 10.11: Seek new commercial development that is attractive, functional and adds value to the physical environment.

10.11.1 Require the location of new commercial development (office, research and development, and related light manufacturing) to take advantage of locational amenities and coexist with neighbors in mixed-use environments.

10.11.2 Ensure that new commercial developments maximize compatibility with surrounding neighborhoods.

10.11.3 Continue to curb the inefficient use of land by regulating minimum height, setbacks, build-to lines and parking through master planning methods and zoning code regulations.

10.11.4 Maximize the year round potential for public transit, biking, and walking in new developments.

Urban Design Policy 10.15: Wherever possible, restore and maintain the traditional street and sidewalk grid as part of new developments.

10.15.2 Integrate and/or reuse historic pavement materials for streets and sidewalk reconstruction, where appropriate.

10.15.4 Improve access management and way-finding to and from all streets, sidewalks, and other pedestrian connections.

4. Conformance with applicable development plans or objectives adopted by the City Council.

The site is located within the boundaries of the *North Loop Small Area Plan* which was adopted by the Minneapolis City Council in April of 2010. The future land use map in the *North Loop Small Area Plan* designates the site as mixed use. The site is located in the land use district referred to as The Cut in the plan. In this area, the plan calls for building heights greater than ten stories. Design guidelines in the plan call for buildings with an urban street frontage, underground parking, prominent front entrances, an abundance of window glass, more landscaping and a reduction in the overall amount of hardscape. While the development could be taller and more densely developed, CPED believes that the proposed development is in conformance with the recommendations of the *North Loop Small Area Plan*.

5. Alternative compliance.

The Planning Commission or zoning administrator may approve alternatives to any site plan review requirement upon finding that the project meets one of three criteria required for alternative compliance. Alternative compliance is requested for the following requirements:

- **Building Placement.** The site does not have frontage on a public street so therefore the proposed building will not reinforce the street wall. The placement of the building on the lot does not reinforce a public street but it does reinforce Dock Street, the private street located within the development, and the Cedar Lake Trail, the public pathway adjacent to the site. When the first phase of the PUD was approved the entire PUD site was replatted. At that time CPED acknowledged that there would be lots created without street frontage. CPED is recommending that the City Planning Commission grant alternative compliance to allow the building to be located where it is proposed. By creating the lots that are landlocked on the larger PUD site and building on them there will be activity brought to an area that has been void of activity for many decades.
- **Building Placement from Property Line.** The site does not have frontage on a public street so therefore the property does not have a front lot line. When the first phase of the PUD was approved the entire PUD site was replatted. At that time CPED acknowledged that there would be lots created without street frontage. CPED is recommending that the City Planning Commission grant alternative compliance to allow the building to be located where it is proposed. By creating the lots that are landlocked on the larger PUD site and building on them there will be activity brought to an area that has been void of activity for many decades.
- **Building Entrances.** The site does not have frontage on a public street. However, the front of the building is oriented towards Washington Avenue North. The building will have entrances located on the Washington Avenue North, Third Avenue North and Cedar Lake Trail sides of the building. When the first phase of the PUD was approved the entire PUD site was replatted. At that time CPED acknowledged that there would be lots created without street frontage. CPED is recommending that the City Planning Commission grant alternative compliance to allow the building to be located where it is proposed. By creating the lots that are landlocked on the larger PUD site and building on them there will be activity brought to an area that has been void of activity for many decades.
- **Windows.** The ground floor facing this public pathway contains 13 percent windows. Where there are active functions along this side of the building there are windows. The other areas of

the building along the Cedar Lake Trail contain the access to the underground parking and the loading dock. CPED is recommending that the City Planning Commission grant alternative compliance to allow there to be 13 percent ground floor windows facing the Cedar Lake Trail. The building is subject to a window requirement on all four sides of the building and all other sides of the building are meeting it.

- **Active Functions.** Along the Cedar Lake Trail side of the building only 43 percent of the ground floor contains active functions. The other areas along this side of the building contain the access to the underground parking and the loading dock. CPED is recommending that the City Planning Commission grant alternative compliance to allow there to be 43 percent active functions facing the Cedar Lake Trail.

PRELIMINARY/FINAL PLAT

The Department of Community Planning and Economic Development has analyzed the application for a Preliminary and Final Registered Land Survey based on the following findings:

1. *The subdivision is in conformance with these land subdivision regulations, the applicable regulations of the zoning ordinance and policies of the comprehensive plan.*

   The applicant is proposing to replat several lots into two new lots and five outlots. Lot 1, Block 1 will be occupied by the T3 building and Lot 1, Block 2 will be occupied by the existing Union Plaza building. Outlot A was platted during the first phase of the PUD is occupied by Dock Street. The boundaries of this outlot are being modified for the realigned road. Outlots B and C are located underneath the I-94 viaducts. They are and will continue to be occupied by surface parking lots. Outlot C will provide access to the loading dock in the T3 building and Outlot E was platted during the first phase of the PUD and provides access to the Dock Street Flats parking garage and will also provide access to the T3 parking garage. When the outlots are proposed for redevelopment the applicant will need to replat those portions of the property. Individual lots within PUD's are exempt from the public street frontage requirement of section 598.230 and the design requirements of sections 598.240 and 598.250.

   Section 598.260 Planned unit developments and cluster design, requires the design of a subdivision for a planned unit development to implement the site plan as approved by the Planning Commission and shall include a deed restriction designating the following:

   1. *The relationship between all common spaces and each individual lot (rights in the common spaces and proportionate ownership accruing to the individual lot).*

      The applicant will be filing a Reciprocal Easement Agreement that addresses the relationship and rights of the owners of the lots within the subdivision related to common area, access, maintenance and taxes.

   2. *Provision for access to each lot that does not have frontage on a public street.*

      As part of the development, Dock Street, the private road that was constructed as part of the first phase of the PUD, will be extended around the southeast side of the T3 building and will connect to a second access point to the site from Third Avenue North. Dock Street is open to the public although it is a private road. When subsequent phases of the PUD are constructed Dock Street will be extended accordingly.

   3. *A requirement that an owner's association be created. The duties and responsibilities of the owner's association shall include maintaining the elements of the planned unit development as authorized under the zoning ordinance or other applicable regulations.*

The applicant will be filing a Reciprocal Easement Agreement that addresses the relationship and rights of the owners of the lots within the subdivision related to common area, access, maintenance and taxes.

4. *A provision that the taxes, special assessments, and other charges and fees that would normally be levied against the common spaces shall be levied against the individual lot occupied or to be occupied by buildings in direct proportion to the interest that is stated in the deed restriction and shall provide that such levies shall be a lein against the individual lots.*

   The applicant will be filing a Reciprocal Easement Agreement that addresses the relationship and rights of the owners of the lots within the subdivision related to common area, access, maintenance and taxes.

5. *A requirement that any disposition of any of the common property situated within the planned unit development shall not be made without the prior approval of the Planning Commission.*

   If an amendment is made to the Planned Unit Development the proposed amendments shall be reviewed and approved by the City Planning Commission.

2. *The subdivision will not be injurious to the use and enjoyment of other property in the immediate vicinity, nor be detrimental to present and potential surrounding land uses, nor add substantially to congestion in the public streets.*

   The proposed subdivision will allow for proposed and future redevelopment of the site. Surrounding uses include residential developments, office buildings, commercial businesses, interstate viaducts, the railroad corridor, the Cedar Lake Trail and surface parking lots. The TDMP that was completed for this development concludes that the existing street capacity is adequate to support the traffic that will be generated by this development. A copy of the TDMP is attached to this report. There are several implementation measures that the applicant has committed to executing as part of the build out of this phase of the PUD.

3. *All land intended for building sites can be used safely without endangering the residents or users of the subdivision or the surrounding area because of flooding, erosion, high water table, soil conditions, improper drainage, steep slopes, rock formations, utility easements or other hazard.*

   The applicant has indicated that the site will be designed to be used safely without endangering the users of the subdivision or the surrounding area. Each phase of the Planned Unit Development will be reviewed by the City's Public Works divisions for compliance with all applicable ordinances.

4. *The lot arrangement is such that there will be no foreseeable difficulties, for reasons of topography or other conditions, in securing building permits and in providing driveway access to buildings on such lots from an approved street. Each lot created through subdivision is suitable in its natural state for the proposed use with minimal alteration.*

   The parcels created by this application present no foreseeable difficulties for the proposed or future redevelopment. No significant alterations to the land appear necessary.

5. *The subdivision makes adequate provision for stormwater runoff, and temporary and permanent erosion control in accordance with the rules, regulations and standards of the city engineer and the requirements of these land subdivision regulations. To the extent practicable, the amount of stormwater runoff from the site after development will not exceed the amount occurring prior to development.*

   The Public Works Department will review and approve the drainage and sanitary system plans for this development prior to building permits being issued.

RECOMMENDATIONS

The Department of Community Planning and Economic Development recommends that the City Planning Commission adopt staff findings for the applications by Hines North Loop Green LLC.

A. Conditional Use Permit for a Planned Unit Development.

Recommended motion: **Approve** the conditional use permit to amend a planned unit development (BZZ-5484) to allow for Phase II - a new office building with ground floor commercial space, subject to the following conditions:

1. The conditional use permit shall be recorded with Hennepin County as required by Minn. Stat. 462.3595, subd. 4 before building permits may be issued or before the use or activity requiring a conditional use permit may commence. Unless extended by the zoning administrator, the conditional use permit shall expire if it is not recorded within two years of approval.
2. The applicant shall continue to work with staff on the fence design, the location of the fence and the landscape plan as it pertains to the relocated dog run.
3. The property manager will provide preferred parking in the parking garage for registered employer carpools/vanpools.
4. The owner will provide a connection through the T3 Office Project site for bicycle access to the Cedar Lake Trail for both employees and the public.
5. The owner will provide within the T3 Office Project secure bicycle storage in the bike room of the building for employees and patrons. A minimum of one hundred (100) bike spaces will be provided between the bike room and outdoor racks.
6. The owner/property manager will implement a shared bicycle program for the employees of the T3 Office Project. The building will initially have six (6) bicycles docked in the parking garage which residents will be able to check out and return on an as-needed/as-available basis.
7. All parking provided in the subterranean garage and project site of the T3 Office Project is specifically designated for employees of T3 Office Project, guests, and patrons. No general public parking will be available at the project site.
8. As required by section 527.120 of the zoning code, the development shall comply with the standards for underground parking from Table 527-1, Amenities totaling a minimum of 5 points.

B. Conditional Use Permit for a Surface Parking Lot in the DP Downtown Parking Overlay District.

Recommended motion: **Approve** the conditional use permit for a surface parking lot in the DP Downtown Parking Overlay District, subject to the following conditions:

1. There shall be no more than 20 parking spaces located in the surface parking lot.

C. Variance of the floor area ratio.

Recommended motion: **Approve** the variance to increase the Floor Area Ratio of the building from 4.8 to 5.32.

D. Site Plan Review for a new office building.

Recommended motion: **Approve** the site plan review for a new office building with ground floor commercial space, subject to the following conditions:

1. Approval of the final site, landscaping, elevation and lighting plans by the Department of Community Planning and Economic Development.
2. All site improvements shall be completed by May 11, 2017, unless extended by the Zoning Administrator, or the permit may be revoked for non-compliance.

E. Preliminary and Final Plat.

Recommended motion: **Approve** the preliminary and final plat, subject to the following conditions:

1. The Reciprocal Easement Agreement shall be recorded with Hennepin County.
2. All development shall be approved as part of a Planned Unit Development or the land shall be replatted or otherwise arranged to meet the street frontage requirements of Chapter 598, Land Subdivision Regulations.

ATTACHMENTS

1. PDR report
2. Written description and findings submitted by applicant
3. Zoning map
4. Civil plans, landscape plan, site plan and floor plans
5. Materials sample sheet
6. Building elevations
7. Electrical plan and specifications
8. Photos
9. Correspondence

Minneapolis Development Review
250 South 4th Street
Room 300
Minneapolis, MN 55415

Preliminary Development Review Report

Development Coordinator Assigned: **MATTHEW JAMES**
(612) 673-2547
matthew.james@minneapolismn.gov

Status *
RESUBMISSION REQUIRED

Tracking Number:	PDR 1001264
Applicant:	HINES 90 S. 7TH STREET SUITE #150 MINNEAPOLIS, MN 55402
Site Address:	324 3RD AVE N 316 3RD AVE N 323 WASHINGTON AVE N
Date Submitted:	03-DEC-2014
Date Reviewed:	10-DEC-2014

Purpose

The purpose of the Preliminary Development Review (PDR) is to provide Customers with comments about their proposed development. City personnel, who specialize in various disciplines, review site plans to identify issues and provide feedback to the Customers to assist them in developing their final site plans.

The City of Minneapolis encourages the use of green building techniques. For additional information please check out our green building web page at: http://www.ci.minneapolis.mn.us/mdr/GreenBuildingOptions_home.asp.

DISCLAIMER: The information in this review is based solely on the preliminary site plan submitted. The comments contained in this report are preliminary ONLY and are subject to modification.

Project Scope

Seven-story office building with 210,000 rentable square feet (Phase 2 of North Loop PUD @333 Washington Ave. N.).

Review Findings (by Discipline)

❑ Historical Preservation Committee

- This site is located in the Warehouse Historic Distirct.
- A Certificate of Appropriatness application is required for the new building.

***Approved**: You may continue to the next phase of developing your project.
***Resubmission Required**: You cannot move forward or obtain permits until your plans have been resubmitted and approved.

❑ Addressing

- Per City of Minneapolis Street Naming and Address Standard V1.22, the City of Minneapolis holds authority for assignment of all addresses, verification, change, and/or additions. Each assigned address number uses the street that provides the best/direct access for life safety equipment and best/direct access to the occupants.
- The address for the proposed Hines T3 building will be 323 Washington Ave N. This address meets the City of Minneapolis Street Naming and Address Standard requirements.
- When assigning suite sequences the following guidelines are as follows:
  - The first one to two digits of the suite sequence number will designate the floor number of the site.
  - The last two digits of the suite sequence number will designate the unique ID for the unit (condo, suite, unit, or apartment).
  - Suite sequence digit numbers will be assigned to dwelling, commercial and retail units, not common areas. For example, laundry rooms, saunas, workout rooms, etc., would not be assigned numbers.

❑ Parks - Forestry

- Contact Craig Pinkalla (612-499-9233 cpinkalla@minneapolisparks.org) regarding any questions related to planting, removal or the process for protection of trees during construction in the city right of way.
- Effective January 1, 2014, the City of Minneapolis and the Minneapolis Park and Recreation Board adopted an update to the existing Parkland Dedication Ordinance. The adopted City of Minneapolis Parkland Dedication ordinance is located in Section 598.340 of the City's Land Subdivision ordinance:
- http://library.municode.com/index.aspx?clientId=11490
- As adopted, the fee in lieu of dedication for new residential units is $1,500 per unit (affordable units excluded per ordinance) and for commercial and industrial development it is $200 per development employee (as defined in ordinance). Any dedication fee (if required) must be paid at the time of building permit issuance.
- There is also an administration fee that is 5% of the calculated park dedication fee.
- As proposed, for the Hines T3 project, the calculated dedication fee is as follows:
  - Park Dedication Fee Calculation =
  - Non-Residential Commercial Space = $105,000
  - 5% of $XX (Administration Fee) = $ 1,000
  - Total Park Dedication Administrative Fee: = $106,000
  - This is a preliminary calculation based on your current proposal; a final calculation will be made at the time of building permit submittal.

For further information, please contact Matthew D. James at (612)673-2547

❑ Zoning - Planning

- Continue to work with CPED staff to identify land use applications.

❑ Street Design

- The plan as submitted meets the requirements of the Public Works Street Design Division.

❑ Sidewalk

- The plan as submitted meets the requirements of the Public Works Sidewalk Inspections Division.

❑ Right of Way

- Note to the Applicant: The current plan provides for the future relocation of the Cedar Lake Trail to a tunnel/arcade running through the proposed building; however the plans do not provide sufficient detail for a complete review and approval at this time. Future plans shall provide complete tunnel dimensions and trail profiles including appropriate connections to the existing Cedar Lake Trail. In addition, the Applicant shall

provide documentation that the requirements of Hennepin County (HCRRA) and Mn/DOT have been satisfied in relation to existing agreements and easements.

- Any elements of an earth retention system and related operations (such as construction crane boom swings) that fall within the Public right-of-way will require an encroachment permit application. If there are to be any earth retention systems which will extend outside the property line of the development then a plan must be submitted showing details of the system. All such elements shall be removed from the Public right-of-way following construction with the exception of tie-backs which may remain but must be uncoupled and de-tensioned. Please contact Bob Boblett at (612) 673-2428 for further information.
- In addition, any elements of an earth retention system and related excavations that impact the Public right-of-way (including the existing Cedar Lake Trail) will require a "Right-of-Way Excavation Permit". This permit is typically issued to the General Contractor just prior to the start of construction. However, it is the Applicant's responsibility to insure that all required permits have been acquired by its consultants, contractors, sub-contractor's prior to the start of work.
- For future trail design, maximum grades on the Cedar Lake Trail cannot exceed 5%.

❑ Sewer Design

- Groundwater: Please identify the lowest floor elevation on the grading plan. Please also identify if any permanent groundwater discharge are proposed on the site.
- Stormwater Management: The HydroCAD model indicates the proposed SE subcatchment bypasses the infiltration system, however this does not seem to be the case based on the grading and storm sewer plan. If this area is being routed to the infiltration system, it should be accounted for in the modeling. Please clarify.
- The comparison of the existing and proposed discharge rates should be based on where the discharges from the site are occurring. For instance it does not appear that much of the site currently discharges to the storm sewer on the northwest side of the site, but that much of it discharges to the storm sewer that is located more central on the site. Please break down the discharge comparisons based on where they occur.
- Please provide an updated detail of the underground infiltration basin on Sheet C8-2 based on the proposed design.
- It appears there could be significant amounts of clay material in the location of the underground infiltration system. This material would need to be removed and replaced with suitable material so the anticipated infiltration rate of 0.8 in/hr, as identified in the HydroCAD model, can be achieved or the system redesigned to account for the poor infiltration.
- An operations and maintenance plan is required for the stormwater treatment devices. The O&M plan shall define the maintenance regimen, including type and interval of maintenance and party to conduct such maintenance. Please provide a copy of the O&M Plan.
- Please add the following note to the appropriate plan sheet: The Contractor, property owner or responsible party shall contact Minneapolis Surface Waters and Sewers 48 hours prior to any excavation or construction related to or in the location of the proposed Stormwater Management BMP (Contact Paul Chellsen, 673-2406 or paul.chellsen@minneapolismn.gov).
- Please add the following note to the appropriate plan sheet: Upon the project's completion the General Contractor, Property Owner or Responsible Party shall provide to the Department of Public Works a Final Stormwater Management Report including record drawings. This report will serve as a means of verification that the intent of the approved stormwater management design has been met. This final report shall substantiate that all aspects of the original design have been adequately provided for by the construction of the project.
- Several features of the stormwater management system appear to be located outside the property boundaries on adjacent parcels. Private easements and/or agreements among the properties must be provided and recorded with the County in order to allow this. Please provide copies of the recorded easements and/or agreements.
- Utility Connections: The proposed sanitary sewer appears to cross and serve several properties. Private easements and/or agreements among the properties must be provided and recorded with the County in order to allow this. Please provide copies of the recorded easements and/or agreements.The proposed sanitary sewer connection appears to connect with an MCES interceptor line. A connection permit from MCES will be

required to make this connection. Please complete the MCES Direct Connection Application Form and submit to the City for review. Please also contact MCES for additional interceptor information, instructions and MCES standard connection details. Contact information is on the MCES application form.

- Please provide supporting documentation of the sizing of the sanitary sewer service for the several properties.
- The existing sanitary sewer that connects to the City sanitary sewer main in Washington is to be removed upon the new connection. Please include the removal of the existing sanitary in the plans.
- The sanitary sewer drop manhole appears to be in conflict with the existing storm sewer on Sheet C4-2. A suitable drop manhole should also be provided. Please include a detail of the drop structure.
- Further review of the proposed storm sewer connection will be completed once the modeling has been updated to reflect these comments. The location or connection method may need to changes based on the revised information.
- Utility: The existing storm sewer on the northwest side of the site should be shown, along with all relevant pipe and structure information.
- Non Stormwater Discharges: Detail all mechanical and non-stormwater discharges. Non-stormwater discharges are not permitted unless approved by the City of Minneapolis. Non-stormwater discharges not declared and approved will not be permitted. If there currently are none and nothing is proposed declare this status on the plans.
- For comments or questions on Public Works Surface Water & Sewers Division related requirements please contact Jeremy Strehlo, (Professional Engineer) at (612) 673-3973, or jeremy.strehlo@minneapolismn.gov.

❑ Traffic and Parking

- The nature of the proposed development is such that traffic impacts will be an issue; please contact Allan Klugman at (612) 673-2743 to discuss the requirements of an Amendment to the Travel Demand Management Plan (TDMP) completed for the Dock Street Apartments Phase I.
- Use of the parking ramp and trash/loading area would appear to require access across adjacent private property; The Applicant shall provide documentation of approvals from all affected private land owners.

❑ Water

- All existing and proposed underground Public Utilities (water, sanitary sewer, and storm drain) shall be shown on the site plan with corresponding pipe sizes and types. For Public watermain infrastructure records call (612) 673-2865. Any existing connections not in use shall be noted on the plans for removal, and shall be removed per the requirements of the Utility Connections Department, call (612) 673-2451 for more information.
- Due to the height of the building (6 stories and up) it is recommended that separate domestic water and fire service lines be provided; pumps are not allowed on combination water services. Please contact Rock Rogers at (612) 673-2286, to review domestic and fire service design, connections, and sizes.

❑ Fire Safety

- Provide required automatic fire suppression system throughout building.
- Fire department connection must be located on the address side of building and within 150 feet of a fire hydrant.
- Provide required fire alarm system throughout building.
- Provide and maintain fire apparatus access at all times.

❑ Environmental Health

- During site preparation and excavation abandoned/lost underground storage tanks and abandoned out-of-service wells may be encountered. Prior to removal of tanks or sealing of wells contact Tom Frame of Environmental Services for local requirements. Impacted soils may be encountered during from historical site activities. If impacted soil is encountered during site activities work will need to stop and notification provided to the MN State Duty officer at (615) 649-5451. Approval for removal, disposal and/or reuse of

impacted soils must be must occur from the MCPA and the City of Minneapolis prior to continuing excavation activities.

- If dewatering is required during site construction see below for city permit requirements. Subgrade structures should be designed to prevent infiltration of groundwater without the need for a permanent dewatering system being installed. If a continuously operating permanent dewatering system is needed it must be approved as part of the sanitary sewer and storm drain site plan approval prior to construction beginning.
- No construction, demolition or commercial power maintenance equipment shall be operated within the city between the hours of 6:00 p.m. and 7:00 a.m. on weekdays or during any hours on Saturdays, Sundays and state and federal holidays, except under permit. Contact Environmental Services at (612) 673-3867 for permit information.
- Permits and approval are required from Environmental Services for the following activities: Temporary storage of impacted soils on site prior to disposal or reuse; Reuse of impacted soils on site; Dewatering and discharge of accumulated storm water or ground water, underground or aboveground tank installation or removal, well construction or sealing. Contact Tom Frame at(612) 673-5807 for permit applications and approvals.
- A review of the project, permits issued and an inspection from Environmental Service for identification of equipment and site operations that require annual registration with the City of Minneapolis will occur for this project.

❑ Construction Code Services

- Building code initial analysis for PDR. This is not intended as a complete code review but to confirm basic design elements for exterior building code items.
- The area of exterior wall openings is limited if exterior walls are located close to property lines. See Table 704.8
- Temporary shoring design for excavation adjacent to property lines is required for permit purposes.
- The storm sewer line along the west side of the building appears to be running through the parking level.
- Walks and utilities serving the building are on, or partially on, adjacent property.
- The penthouse may project above the roof up to 18 feet. The aggregate penthouse area cannot exceed 1/3 of the roof area. Penthouse exterior walls with a fire separation distance of 20 feet or greater shall be non-combustible construction. Penthouses cannot be used for purposes other than shelter of mechanical equipment or vertical shaft openings - otherwise it is considered a floor.
- An alternate may be proposed that would consider the bike path similar to an exterior ramp or stair per 1023.6.
- The maximum height allowed by code for this building is 85 feet above the grade plane. The height is defined as the vertical distance from the grade plane to the average height of the highest roof surface.
- All roof surfaces beneath elevated roof pavers must be non-combustible.
- Guard rails must extend completely around roof decks to prevent access to roof.
- If no public lands exist adjacent to this project, the exit discharge must pass through adjacent property to a public street or yard. An exterior area of refuge may be required.
- A Service Availability Charge (SAC) determination will need to be submitted to the Metropolitan Council for the proposed project. Please refer to this link for more information or Contact Karon Cappaert at (651) 602-1118 or karon.cappaert@metc.state.mn.us http://www.ci.minneapolis.mn.us/mdr/docs/sac_availability_charge.pdf.

END OF REPORT

NORTH LOOP GREEN - PLANNED UNIT DEVELOPMENT
T3 - Second Phase of the PUD
Statement of Purpose and Description of Project
Revised March 17, 2015

PROJECT PURPOSE AND DESCRIPTION

Hines North Loop Green LLC (Hines) proposes to construct the T3 Office Project (the "Project"), a seven-story heavy timber office building containing approximately 234,287 square feet of gross floor area. The project will be Phase 2 of the North Loop Green Planned Unit Development (PUD) located at 323 Washington Avenue North in the Rail Yards Area of the Minneapolis Warehouse Historic District. The Project will redevelop a site currently used as a surface parking lot into a multi-tenant office development that provides new Class A office space and street level commercial activity in proximity to numerous alternative modes of transportation including light rail, commuter rail, bus, regional trails and bikeways, and the pedestrian skyway system. The Project is anticipated to be constructed in 2015 - 2016. Hines also controls and intends to redevelop the remainder of the Rail Yards Area that lies southwest of the project site, but there are no current plans or schedule for future project phases.

The two-lane private road, Dock Street, that was constructed as part of the PUD Phase 1 Dock Street Flats project will provide the main access to and from the site. Dock Street was constructed by and is maintained by Hines, but is open to the public. As part of Phase 2, Dock Street will be extended around the southeast side of the T3 development parcel to connect to a second access drive from 3rd Avenue. Twenty surface parking stalls that serve the tenants of the Union Plaza office building will need to be realigned to allow for the extension of Dock Street: ten of the existing spaces will move farther north closer to Union Plaza, ten spaces will move south and be located on the other side of Dock Street, and two spaces will be eliminated. Future extension of Dock Street will occur as redevelopment of the Rail Yards Area proceeds.

The access road from 3rd Avenue and a drive area along the west side of the T3 lot to the loading dock cross land owned by MnDOT. Some other features of the site plan, including lighting, pavement and landscaping are proposed to be located on MnDOT land. Hines is in ongoing discussions with MnDOT to obtain the requisite permissions for the proposed use of MnDOT land prior to issuance of building permits.

The connection to/from the Cedar Lake Trail to the North Loop Neighborhood that was constructed with the Phase 1 Dock Street Flats project will remain intact. The connection from the trail allows users to travel through the site on sidewalks or shared bicycle access along Dock Street.

The PUD area is being expanded to include approximately 12,792 square feet of land purchased from MnDOT for a total site area of 203,448 SF (4.7 acres). A portion of the PUD is being re-plated to incorporate the MnDOT conveyance into the T3 development lot and to realign Dock Street. The current and proposed uses of the parcels within the PUD following the re-plat are as follows:

- Lot 1, Block 2, North Loop Green – This lot contains the 185-unit, mixed use Dock Street Flats building that was constructed in Phase 1.

- Outlot A, North Loop Green – This outlot is a 13-space surface parking lot serving the retail uses in the Dock Street Flats building.

- Lot 1, Block 1, North Loop Green Second Addition (NLG2nd) – The T3 office building will be developed on this lot.

- Lot 1, Block 2, NLG2nd - This lot contains the Union Plaza office building.

- Outlot A, NLG2nd – This outlot will contain the existing and extended privately-owned (but publicly accessible) Dock Street. It will be subject to a Reciprocal Easement Agreement for access rights and maintenance responsibilities for all the PUD lots.

- Outlot B and Outlot C, NLG2nd – These outlots are located under the 4th Street I-94 viaduct. They are currently utilized as a surface parking facility. No change to the use is contemplated at this time. They may be developed as an open space amenity area when development occurs on the southwest end of the Rail Yards Area.

- Outlot D, NLG2nd – This outlot will provide access to the loading dock of the T3 Office Project.

- Outlot E, NLG2nd - This outlot was developed as a private street during Phase 1 and provides access to the Dock Street Flats building lobby and garage entrance and to the Cedar Lake Trail. This outlot will also provide access to the T3 lobby and garage entrance. It will be subject to a Reciprocal Easement Agreement for access rights and maintenance responsibilities for all the PUD lots.

The Project is located in the Minneapolis Warehouse Historic District. The Minneapolis Warehouse Historic District Design Guidelines (2010) separate the district into three distinct character areas; the proposed Project is located within the Rail Yards Area of the historic district, which "is different from the rest of the Warehouse District" and "historically, the site contained railroad depots, sheds, offices and railroad tracks." The area "did not contain warehousing, manufacturing or other buildings or structures found in other parts of the district." The Rail Yards Area is significant for the manipulation of grade and "the significant feature of the site is the lowered grade relative to the adjacent properties…It is important to convey the significance of this area in new development and provide for a visual context that sets this area off from the adjacent historic buildings." The design of the Project is consistent with the applicable design guidelines for the Warehouse Historic District and was approved by the Heritage Preservation Commission.

The proposed design marries traditional, industrial proportions with modern materials and detailing. The proposed T3 project is respectful of its neighborhood and responds to its context with a simple massing. The form, color and exterior articulation create a quiet building – responding to and complementing the historical buildings rather than drawing attention to it.

By studying the existing building stock in the Warehouse District, the design team identified common design themes for the massing and window systems. Four different approaches to window composition emerged from the neighborhood and ultimately two solutions were deemed most

appropriate for the building's use, location and views in and out of the building. This neighborhood analysis of the historical building typologies also informed the strong vertical rhythm of piers clad in pre-weathered Corten steel. These piers frame the large window openings - generating interest and animation along the street faces, and when viewed from afar. The street level building base is subtly distinguished from the upper levels by its proportion of glass retail storefront and canopies. The upper floors feature rhythmic punched window openings, playing on historic proportions but using modern, highly efficient windows. The topmost floor features a slightly taller proportion of punched windows, referencing the existing 'bottom-middle-top' designs of many buildings in the district.

Inside the building, exposed mass timber columns and floor slabs recall the heavy timber construction of the building's predecessors. While the historic brick-and-timber structures of the district used old growth solid timbers for columns, beams, and even floor joists, T3's modern technological approach uses engineered wood components (chiefly glu-lam and cross-laminated timber). These modern materials bring the warmth and beauty of wood to the interior, while being sustainable, renewable, and structurally predictable.

Building service systems such as sprinkler lines, HVAC, and electrical components will be efficiently designed and organized, then left exposed within the finished space, alluding to the industrial character of historic buildings. Again, modern technology will allow these systems to be quiet, environmentally efficient, and enhance tenant comfort and enjoyment of the space.

Key amenities for the Project include a rooftop deck with lounge seating, grill stations and a fire pit, as well as stunning views of the downtown skyline and the surrounding North Loop neighborhood, a social workspace lounge on the ground floor, fitness center, bike storage, bike repair station, shared bicycle access, immediate access to the downtown skyway system, and convenient access to hour cars located within close proximity of the Project. There are currently 61 surface parking stalls within the Project site which will be replaced with 65 parking stalls in the Project's underground garage. The access point to the Cedar Lake Trail that was built during construction of Phase 1 will enable tenants of the Project to directly access the trail for recreation and human powered transit.

The landscape design intent extends the architectural concepts into the landscape to present a cohesive theme of indoor/outdoor connections. The landscape design is motivated by the notion of the shifting planes and layering of design elements. Strong linear patterns form the landscape typology found in the paving pattern and long rectilinear planting beds. The landscape will provide safe, clear paths for pedestrians between roads, parking, building facilities and other features. The landscape design will utilize plantings to reinforce safe circulation of pedestrians. The landscape materials will be primarily of native and adapted species selected for low maintenance, low water usage and seasonal interest. Tree, shrub and perennial species will be tolerant of harsh environmental conditions such as drought, salt and sun. Plaza trees will be over-story boulevard trees at 3.0 to 3.5" caliper. Ornamental trees will be placed to add seasonal interest and will be 2 to 3" caliper in size. Coniferous arborvitaes will be used for visual and wind screening and will be 6 to 8' in height. Shrub plantings will consist of deciduous and coniferous shrubs and will be located to enhance window and building foundations. Perennial planting areas will consist of herbaceous perennials as well as ornamental grasses.

REQUIRED APPLICATIONS

The applications required for the project are:

1. Conditional use permit to amend a planned unit development ("PUD")
2. Conditional use permit to realign 20 spaces of accessory surface parking within the Downtown Parking Overlay District
3. Variance to increase the allowed floor area ratio (FAR) from 4.8 to 5.32
4. Site plan review
5. Subdivision for the proposed re-plat of the existing North Loop Green parcels affected by the T3 project and to incorporate the MnDOT parcel into the PUD

PUD ALTERNATIVES

The following PUD alternatives are being requested:

1. To increase the allowed FAR by 20% from 4.0 to 4.8.

   The T3 office building will have 234,287 SF of gross floor area (GFA). The FAR of the T3 office building based on the size of the T3 lot will be 5.32. The maximum FAR in the B4S-1 District for non-residential uses is 4.0 (the maximum FAR for hotels and residential uses is 8.0). A PUD alternative to increase the FAR by 20% to 4.8 is being requested. A variance is also being requested to further increase the allowed FAR to 5.32. The proposed FAR is reasonable in light of City policies that encourage increased density of development in Transit Station Areas. Further, the FAR of the PUD following development of the T3 Project will only be 2.47 due to the inclusion of private streets within the PUD area and due to the limitations on development caused by the I94 viaducts.

2. To reduce the loading requirement from 2 large to 1 small loading space.

   The typical loading needs for the T3 building will be for delivery of office supplies and retail goods, building maintenance, and trash pickup. These needs will be served by small box trucks, delivery vans and garbage trucks. Deliveries by large semi-trucks will be rare and most likely associated with initial tenant move-in activity. The PUD has sufficient circulation to allow a semi to park on the private streets or the area under the viaducts on the infrequent occasions when that is needed.

Although specific sign designs are not yet determined, we anticipate returning to the Planning Commission to request the following alternatives to the sign standards.

Three wall signs located near the top of the building (approximately 90 feet above grade) are proposed for the facade facing Washington Avenue (North), the facade facing 3rd Avenue (East) and the facade facing the I-94 viaducts (South). Because the T3 lot does not have actual frontage on these public streets, none of these walls are considered primary building walls on which signage can be located, so an alternative is requested. The proposed height also exceeds the general height limit of 28 feet. These sign areas are intended to be used to identify either an anchor tenant or the T3 building. Due to the distance between the T3 building and the public streets and the lower elevation of the Rail Yards Area, placing signage at the top of the

building is a reasonable alternative to the 28-foot standard. A freestanding sign is proposed to be installed on a concrete wall near the main building entry; no alternative is needed for this sign.

The Heritage Preservation Commission has given preliminary indication that they could support the proposed wall sign locations and size (notwithstanding the more restrictive 14-foot height limit for wall signs in the HPC design guidelines), subject to review of final sign design. Although additional HPC review and approval will be required for the actual design of the wall signs, this indication of general support for their size and location now is important for facilitating marketing and leasing of the building to signature tenants.

At this time, Hines is requesting the opportunity to discuss the proposed sign plan and receive feedback from the Planning Commission regarding the three identified wall sign locations and height.

Hines is also requesting that the Commission authorize Planning staff to administratively review and approve signage throughout the PUD that is not located on a primary building wall but that otherwise complies with the sign standards of the zoning code.

PUD AMENITIES

Five amenity points are required for the FAR alternative. No amenity points are required for the loading alternative. Ten amenity points will be achieved by providing all parking for the T3 Project (65 stalls) underground.

CONDITIONAL USE PERMIT FOR PLANNED UNIT DEVELOPMENT REQUIRED FINDINGS

The project, including alternatives for FAR, loading and signs, meets the required findings for a conditional use permit (CUP) for a planned unit development (PUD).

1) **The establishment, maintenance or operation of the conditional use will not be detrimental to or endanger the public health, safety comfort or general welfare.**

   The proposed Project will not be detrimental to or endanger the public health, safety, comfort or general welfare, and amending the CUP will allow a development that will benefit the neighborhood and reinforce goals of the comprehensive and small area plans. Infill development on a surface parking lot will have a positive effect on the safety and vitality of the area. The unique heavy timber construction of the T3 building and the proposed landscaping the site will further beautify the neighborhood. The building and site design will reinforce the pedestrian realm within the PUD and new office tenants and their employees will bring many more “eyes on the street” and on the Cedar Lake Trail. Addition of employees on this site will help support the commercial uses in the area and will increase use of the nearby transit facilities and system. The new construction will comply with all building and site development codes.

2) **The conditional use will not be injurious to the use and enjoyment of other property in the vicinity and will not impede the normal and orderly development and improvement of surrounding property of uses permitted in the district.**

The Project will not be injurious to the use and enjoyment of other property or impede development and improvement of surrounding property. The use is similar to other office buildings existing and under construction in the North Loop Neighborhood. High density development on this site is consistent with City goals and will bring new office tenants and their employees to support local businesses and regional transit. The Phase 1 Dock Street Flats project initiated the orderly development of the PUD and set the tone for future phases of the PUD. The proposed Project will also positively impact property values in the area.

3) **Adequate utilities, access roads, drainage, necessary facilities or other measures, have been or will be provided.**

Adequate utilities, access, drainage and other facilities will be provided. The development team will continue to work closely with Public Works, Plan Review and Planning staff to comply with City and other applicable requirements.

Dock Street, which was constructed during Phase 1, will provide access from Washington Avenue to the Project's lobby and parking garage, and will continue to provide access to both Dock Street Flats and Union Plaza. Additional access will be provided from 3rd Avenue North.

The Project site is located within the Mississippi Watershed Management Organization. Stormwater treatment and rate control are required by the City of Minneapolis under the Chapter 54 Stormwater Ordinance. The stormwater treatment portion requires sites to capture the runoff volume from the 1.25" rainfall event by providing some form of stormwater retention. To incorporate this requirement, an underground chamber system is being proposed. The chamber system will have a raised outlet, effectively trapping the required runoff within the chamber system and allowing it to infiltrate into the underlying soils. Stormwater rate control is also achieved by using the chamber system to reduce peak flows by restricting outflows via a smaller diameter pipe. With the proposed improvements, the peak flows are at or below pre-development rates while providing the required water quality treatment.

On-site erosion and sediment control are also required by the City of Minneapolis. BMP's such as silt fence, inlet protection and rock construction entrances will be implemented prior to the start of site work to protect downstream water bodies and conveyance systems.

4) **Adequate measures have been or will be taken to minimize traffic congestion in the public streets.**

There is no minimum parking requirement in the B4S-1 District. Parking for the Project will be provided for with 65 spaces located in one subterranean parking level below the building. The project will also have shared bicycles, bike storage for 100 bikes within the building and for 14 bikes outside of the building. One small loading space will be provided within the building.

The Project area offers an unprecedented opportunity to use alternative modes of transportation to and from the site due to its location adjacent to the Target Field Station, Northstar Commuter Rail Station, Cedar Lake Bicycle and Pedestrian Trail, Downtown skyway system, and numerous bus routes. A TDMP has been prepared for the Project. The TDMP outlines the ways in which the Project can help the City of Minneapolis achieve its goals of enhancing the local transportation system.

5) The conditional use is consistent with the applicable policies of the comprehensive plan.

***Minneapolis Plan for Sustainable Growth* (adopted by the City Council, October 2009)**

The *Minneapolis Plan for Sustainable Growth* ("Plan") guides the future land use of the project area as "Mixed Use". Mixed Use may include a mix of retail, office or residential uses within a building or within a district. There is no requirement that every building be mixed use." The Project includes a combination of office and street level commercial space and the PUD includes additional office, retail and residential uses, meeting the intent of the Mixed Use land use designation.

The Plan designates Washington Avenue North as a Commercial Corridor and all of downtown Minneapolis as a Growth Center. The Plan also includes Transit Station Areas (TSA) as a land use feature. The Project area is within the Target Field TSA. The following policies and implementation steps from the Plan apply to the Project:

Land Use Policy 1.10: Support development along Commercial Corridors that enhances the street's character, fosters pedestrian movement, expands the range of goods and services available, and improves the ability to accommodate automobile traffic.

Land Use Policy 1.13: Support high density development near transit stations in ways that encourage transit use and contribute to interesting and vibrant places.

> 1.13.5 Concentrate highest densities and mixed use development adjacent to the transit station and along connecting corridors served by bus.

Land Use Policy 1.15: Support development of Growth Centers as locations for concentration of jobs and housing, and supporting services.

> 1.15.2 Support the intensification of jobs in Growth Centers through employment generating development.

The proposed Project will meet these policies by replacing surface parking with a high density commercial development that will intensify jobs within the Downtown Growth Center and intensify use of the nearby transit center. The extension of Dock Street and additional development in the Rail Yards Area will enhance the built environment and pedestrian character of the North Loop neighborhood.

***North Loop Small Area Plan* (adopted by the City Council in April 2010)**

The *North Loop Small Area Plan* divides the neighborhood into several districts. The project area is located in a district called "The Cut." The plan states that "The Cut" continues to be a

prominent location to improve the connection between the office core and the North Loop neighborhood. The future land use map designates the site as mixed use. The Project is anticipated to meet the intent described for parcels in "The Cut" by intensifying an existing vacant lot with a new office/mixed-use development that will complement the existing mix of office, retail and residential uses in the PUD.

6) The conditional use shall in all other respects, conform to the applicable regulations of the district in which it is located.

Upon approval of the submitted applications, the Project will conform with the applicable regulations of the B4S-1 zoning district.

In addition to the CUP standards the project complies with the additional findings required for planned unit developments.

1) That the planned unit development complies with all of the requirements and the intent and purpose of the PUD chapter. In making such determination, the following shall be given primary consideration:

a. The character of the uses in the proposed planned unit development, including in the case of residential uses, the variety of housing types and their relationship to other site elements and to surrounding development.

Dock Street Flats, Phase 1 of the PUD, is a residential building that provides a mix of studio to 2-bedroom, high-amenity rental apartments. The Project, Phase 2 of the PUD, will redevelop a site currently used as a surface parking lot into a multi-tenant office development that provides new Class A office space and street level commercial activity. Surrounding development includes a mix of retail, office, and warehouse uses, a commuter parking ramp and the Target Field transit station.

b. The traffic generation characteristics of the proposed planned unit development in relation to street capacity, provisions of vehicle access, parking and loading areas, pedestrian access, bicycle facilities and availability of transit alternatives.

The travel demand management plan concludes that the existing street capacity is adequate to support the traffic that will be generated by the Project. Vehicle access will be provided from the newly constructed Dock Street to a subterranean garage with parking that exceeds the requirement of the zoning code. Exceptional pedestrian access is provided via the sidewalks along Dock Street and the sidewalk that connects Dock Street to the Cedar Lake Trail. The Project site is located in close proximity to multiple facilities for alternative transit, including Target Field Station, The Interchange transit hub, MTC bus transit stop immediately adjacent to the Project on Washington Avenue, Ramp B/5th Street Transit Center, Minneapolis Skyway System, and Cedar Lake Trail.

c. *The site amenities of the proposed planned unit development, including the location and functions of open space, the preservation or restoration of the natural environment or historic features, sustainability and urban design.*

Dock Street Flats, Phase 1 of the PUD, provided an extensive range and quality of amenities and the proposed Project will complement the existing PUD amenities and also include an arcade along the west side of the building to accommodate the potential future relocation of the Cedar Lake Trail. PUD amenities include underground parking, pedestrian improvements, decorative fencing, enhanced exterior lighting, enhanced landscaping, recycling storage areas and preservation of character-defining features in the historic district.

d. *The appearance and compatibility of individual buildings and parking areas in the proposed planned unit development to other site elements and to surrounding development, including but not limited to building scale and massing, microclimate effects of the development and protection of view and corridors.*

The construction of Dock Street Flats as the first phase of the PUD was key to the revitalization of the Rail Yards Area. Dock Street serves as an important connector between new development and the multi-layered surrounding fabric, including the historic Union Plaza building. The design and development of T3 provides a natural extension of the improvements constructed in the first phase of the PUD and preserves the opportunity for future pedestrian connections to the transit hub to the south.

The building's placement and site design reinforces the historic corridors through and adjacent to the site. The massing of the proposed design is meant to strengthen the rail corridor visual presence through a strong façade line that gives additional shape and definition along the east side of the corridor. The proposed design also maintains the 80-foot Third Street North Corridor as an open to the sky, unobstructed view corridor. The massing of the proposed design is meant to strengthen the view corridor by shaping the edge of the corridor.

The proposed building scale and massing of the Project is similar to the Dock Street Flats and Union Plaza buildings and surrounding development in the area. The simple, contemporary design and materials are compatible with, but do not mimic, the surrounding historic buildings. Existing surface parking areas adjacent to Washington Avenue and adjacent to Union Plaza and T3 will be retained to serve the commercial uses in the Project.

e. *An appropriate transition area shall be provided between the planned unit development and adjacent residential uses or residential zoning that considers landscaping, screening, access to light and air, building massing and applicable policies of the comprehensive plan and adopted small area plans.*

There are no residential buildings or zoning districts located directly adjacent to the PUD.

f. *The relation of the proposed planned unit development to existing and proposed public facilities, including but not limited to provision for stormwater runoff and storage, and temporary and permanent erosion control.*

As discussed above in proposed finding 3), the project will comply with all requirements for stormwater management and erosion control. Existing public facilities will be utilized.

g. *The consideration, where possible, of sustainable building practices during the construction phases and the use of deconstruction services and recycling of materials for the demolition phase.*

The following sustainable building practices will be utilized: energy efficient HVAC and lighting systems; Xcel Energy Design Assistance Program; recycle generated waste from construction activities; use of low VOC materials and finishes for better interior environmental quality; use of regional materials and products as much as possible to reduce carbon footprint; use of sustainable materials and products, recycled content and renewable materials; underground storm water chambers will be composed of up to 30% recycled materials.

2) That the planned unit development complies with all of the applicable requirement contained in Chapter 598, Land Subdivision Regulations.

The site is being subdivided and will comply with all of the applicable requirements contained in Chapter 598, Land Subdivision Regulations.

CONDITIONAL USE PERMIT FOR SURFACE PARKING IN THE DOWNTOWN PARKING OVERLAY DISTRICT REQUIRED FINDINGS

The North Loop Green PUD is located in the Downtown Parking (DP) Overlay District. The purpose of the DP Overlay District is to "preserve significant and useful buildings and to protect the unique character of the downtown area and the mixed-use downtown neighborhoods by restricting the establishment or expansion of surface parking lots . . . ." Accessory parking lots of not more than 20 spaces are allowed as a conditional use in the DP Overlay District. The undeveloped area of the PUD is a legally non-conforming, commercial parking lot. In addition, an existing accessory surface parking lot serves the retail uses in the Dock Street Flats and another existing accessory parking lot serves the Union Plaza office building. The T3 Office Project will replace 61 stalls of commercial surface parking. The 22 surface stalls that currently serve the Union Plaza building will be relocated and reduced in number to 20 stalls to accommodate the realignment of Dock Street. A CUP is required for the relocation of the 20 surface parking stalls. The proposal meets the following required findings for a conditional use permit.

1) The establishment, maintenance or operation of the conditional use will not be detrimental to or endanger the public health, safety comfort or general welfare.

The proposed relocation and reduction of the accessory parking stalls for Union Plaza will not be detrimental to or endanger the public health, safety, comfort or general welfare. The parking area will comply with all applicable codes and life safety ordinances as well as Public Works Department standards.

2) The conditional use will not be injurious to the use and enjoyment of other property in the vicinity and will not impede the normal and orderly development and improvement of surrounding property of uses permitted in the district.

Twenty stalls of accessory parking will not be injurious to the use and enjoyment of other property or impede development and improvement of surrounding property. The net effect of the T3 Project and the changes to the accessory parking area will be a significant reduction in surface parking area. Maintaining some existing parking for Union Plaza is important to the successful use of that historic building. The parking will be located in front of the T3 building and to the side of Union Plaza, but it will function like street parking along the private Dock Street.

3) Adequate utilities, access roads, drainage, necessary facilities or other measures, have been or will be provided.

Adequate utilities, access, drainage and other facilities will be provided. The parking stalls will be accessed from Dock Street. The development team will continue to work closely with Public Works, Plan Review and Planning staff to comply with City and other applicable requirements.

4) Adequate measures have been or will be taken to minimize traffic congestion in the public streets.

The proposed relocation and reduction of accessory surface parking along the private Dock Street will not cause traffic congestion in the public streets adjacent to the PUD. In addition, a TDMP has been prepared for the Project that outlines the ways in which the Project can help the City of Minneapolis achieve its goals of enhancing the local transportation system.

5) The conditional use is consistent with the applicable policies of the comprehensive plan.

***Minneapolis Plan for Sustainable Growth* (adopted by the City Council, October 2009)**

The *Minneapolis Plan for Sustainable Growth* ("Plan") identifies the project area as within the Target Field Transit Station Area. Land Use Policy 1.13 calls for the City to "[s]upport high density development near transit stations in ways that encourage transit use and contribute to interesting and vibrant places." Implementation Step 1.13.3 for this policy is to "[d]iscourage uses that diminish the transit and pedestrian character of areas around transit stations, such as automobile services, surface parking lots, and drive-through facilities." The proposed Project meets these policies by replacing surface parking with a high density commercial development that will intensify jobs within the Downtown and intensify use of the nearby transit center. The retention of 20 spaces of accessory parking for Union Plaza does not diminish the positive improvements associated with Project.

***North Loop Small Area Plan* (adopted by the City Council in April 2010)**

The *North Loop Small Area Plan* states that "[i]nfill development should be geared toward the removal of surface parking lots and other underdeveloped sites that are replaced with both housing and job density." The North Loop Green PUD is exemplary in achieving this goal. The proposed relocation of the union Plaza parking along Dock Street also complies with the following implementation step in the small area plan: "[e]ncourage on-street parking wherever practical and phase-out existing surface parking lots."

6) The conditional use shall in all other respects, conform to the applicable regulations of the district in which it is located.

Upon approval of the submitted applications, the Project will conform with the applicable regulations of the B4S-1 and Downtown Parking Overlay Districts.

VARIANCE TO INCREASE FAR REQUIRED FINDINGS

The T3 office building will have 234,287 SF of gross floor area (GFA). The FAR of the T3 office building based on the size of the T3 lot will be 5.32. The maximum FAR in the B4S-1 District for non-residential uses is 4.0 (the maximum FAR for hotels and residential uses is 8.0). A PUD alternative to increase the FAR by 20% to 4.8 is being requested. A variance is also being requested to further increase the allowed FAR to 5.32.

1) Practical difficulties exist in complying with the ordinance because of circumstances unique to the property. The unique circumstances were not created by persons presently having an interest in the property and are not based on economic considerations alone.

Practical difficulties exist in complying with the FAR limits of the zoning code and achieving the desired high density development called for on Commercial Corridors, in Growth Centers, and near Transit Stations. The lot areas for buildings within the North Loop Green PUD are restricted due to the need to develop private streets on outlots to serve new development in The Cut. Development sites are further restricted by the 4th Street I94 viaducts. Thus, even though the FAR of the T3 Project will be 5.32, the FAR of the PUD as a whole will only be 2.47 – well below the FAR limits of the zoning code. These are unique circumstances not created by the applicant.

2) The property owner or authorized applicant proposes to use the property in a reasonable manner that will be in keeping with the spirit and intent of the ordinance and the comprehensive plan.

The proposed variance is reasonable and consistent with the intent of the ordinances and the comprehensive plan policies applicable to the site, which call for high density development in the PUD area. As noted, the FAR of the PUD following development of the T3 Project will only be 2.47 due to the inclusion of private streets within the PUD area and due to the limitations on development caused by the I94 viaducts.

3) **The proposed variance will not alter the essential character of the locality or be injurious to the use or enjoyment of other property in the vicinity. If granted, the proposed variance will not be detrimental to the health, safety, or welfare of the general public or of those utilizing the property or nearby properties.**

The granting of the variance will not alter the essential character of the area, be injurious to the use or enjoyment of other properties, or be detrimental to the public welfare. The seven-story building will be similar in character to other office and mixed use buildings in the surrounding Warehouse District. It will be separated from other buildings by the private streets in the PUD, so the increased FAR will not overwhelm or crowd other properties in the vicinity.

SUBDIVISION REQUIRED FINDINGS

1) **The subdivision is in conformance with these land subdivision regulations, the applicable regulations of the zoning ordinance and policies of the comprehensive plan.**

The subdivision is in conformance with the City of Minneapolis subdivision regulations, and the property is planned for development according to the zoning ordinance and policies of the comprehensive plan. As a PUD, the subdivision is exempt from the public street frontage requirements of section 598.230 and the design requirements of sections 598.240 and 598.250. A Reciprocal Easement Agreement (REA) will address the requirements of section 598.260 regarding the relationship and rights of the owners of the lots in the subdivision related to common areas, access, maintenance, and taxes.

2) **The subdivision will not be injurious to the use and enjoyment of other property in the immediate vicinity, nor be detrimental to present and potential surrounding land uses, nor add substantially to congestion in the public streets.**

The proposed North Loop Green 2nd Addition subdivision will not be injurious to the use and enjoyment of other property in the immediate vicinity, nor detrimental to present and potential surrounding land uses, nor add substantially to congestion in the public streets. The subdivision allows for redevelopment of surface parking with mixed use development and will increase the connectivity for vehicles, pedestrians and bicyclists from surrounding streets and trails. The subdivision and future development will not interfere with the adjacent transit facilities or the Cedar Lake Trail. A traffic study was completed in conjunction with an EAW for the development area. Specific travel demand management strategies will be implemented with each phase of development to mitigate traffic impacts and encourage use of transit, shared vehicles and other alternative modes of transportation.

3) **All land intended for building sites can be used safely without endangering the residents or users of the subdivision or the surrounding area because of flooding, erosion, high water table, soil conditions, improper drainage, steep slopes, rock formations, utility easements or other hazard.**

The proposed North Loop Green 2nd Addition subdivision identifies two lots and five outlots to be utilized as the common access routes, utility corridors, and building lots. The existing and proposed building sites will be designed to be used safely without endangering the residents or users of the subdivision or the surrounding area because of flooding, erosion, high water table, soil conditions, improper drainage, steep slopes, rock formations, utility easements or other hazards. This site is outside the 100 year flood plain.

Preliminary development plans (PDR) dated November 17, 2014, have been submitted and reviewed by City staff. The PDR plans outline how the North Loop Green is proposed to be designed with grades, utilities, and access to the existing Union Plaza building on Lot 1, Block 2 North Loop Green 2nd Addition; the proposed Project on Lot 1, Block 1 North Loop Green 2nd Addition; and the Dock Streets Flats on Lot 1, Block 2 North Loop Green of the proposed plat. The City will require preliminary development review and preparation of erosion control and stormwater management plans for all phases of development.

4) **The lot arrangement is such that there will be no foreseeable difficulties, for reasons of topography or other conditions, in securing building permits and in providing driveway access to buildings on such lots from an approved street. Each lot created through subdivision is suitable in its natural state for the proposed use with minimal alterations.**

The proposed North Loop Green 2nd Addition subdivision will be requesting approval as a PUD as part of the zoning applications for the Project. The PUD will provide access from Washington Ave to all of the buildings via a private road identified as Outlots A, D and E North Loop Green 2nd Addition. Outlots B and C of North Loop Green 2nd Addition are located under highway bridges and are not intended to be building sites. The new development lot, Lot 1, Block 1, is relatively flat and there are no foreseeable difficulties in securing building permits for the Project.

5) **The subdivision makes adequate provision for stormwater runoff, and temporary and permanent erosion control in accordance with the rules, regulations and standards of the city engineer and the requirements of these land subdivision regulations. To the extent practical, the amount of stormwater runoff from the site after development, will not exceed the amount occurring prior to development.**

Provisions for stormwater runoff and all erosion control measures will be addressed in both the temporary and permanent state according to the City of Minneapolis standards. The amount of storm water runoff exiting the site will be less in the post development condition due to the proposed stormwater management improvements, than as existing today.

TRAVEL DEMAND MANAGEMENT PLAN

T3 Office Project

Minneapolis, Minnesota

December 23, 2014

Prepared For: Hines

Prepared By: Westwood

TRAVEL DEMAND MANAGEMENT PLAN

T3 OFFICE PROJECT
MINNEAPOLIS, MN

December 23, 2014

Prepared For:

Hines

Hines North Loop Green, LLC
90 South 7th Street, Suite 200
Minneapolis, MN 55402

Prepared By:

Westwood

Westwood Professional Services
7699 Anagram Drive
Eden Prairie, MN 55344

PHONE 952-937-5150
FAX 952-937-5822
TOLL FREE 1-888-937-5150

www.westwoodps.com

Westwood Project R0004973

TRAVEL DEMAND MANAGEMENT PLAN

T3 OFFICE PROJECT
MINNEAPOLIS, MN

I hereby certify that this report was prepared by me or under my direct supervision and that I am a duly Licensed Professional Engineer under the laws of the State of Minnesota.

By:_____

Stephen J Manhart, P.E., License No. PE-22428

Date: December 23, 2014

TABLE OF CONTENTS

I. INTRODUCTION 3

II. LAND USES AND ZONING 5

III. PEDESTRIAN, BICYCLE AND TRANSIT 7

IV. PARKING 11

A. Parking Requirements 11

V. TRAFFIC OPERATIONS 13

VI. TRAVEL DEMAND MANAGEMENT STRATEGIES 15

A. City of Minneapolis Transportation goals 11
B. City of Minneapolis Transportation Policy Points 16
C. Goal of the Travel Demand Management Plan 17
D. Specific Travel Demand Management Strategies 17

VII. APPENDIX 23

LIST OF FIGURES

Figure 1 – Site Location 4
Figure 2 – Concept Site Plan 6
Figure 3 – Bicycle Routes 9
Figure 4 – Bus Routes 10

LIST OF TABLES

Table 1 -- ITE Trip Generation (T3 Office Project) 13
Table 2 -- Modal Split Goals (Dock Street Phase 1 & 2) 13
Table 3 -- Modal Split Goals 17

I. INTRODUCTION

Hines North Loop Green, LLC (Hines) is proposing to develop a 3.25 acres site just to the north of Downtown Minneapolis. The property is located to the north of the I-394/Washington Avenue terminus and is generally located between 3rd Avenue South, the BNSF/Northstar Railroad, Washington Avenue and 5th Street. An Environmental Assessment Worksheet (EAW) for the 3.25 acres Dock Street Residential development was approved by the City of Minneapolis in 2011. In it, a full traffic analysis (Appendix C of the EAW) was developed for the entire site.

The first phase of development was the Dock Street Flats project, which consisted of 185 high-density residential units and 3,200 square feet of commercial that is fronted directly on Washington Avenue. The second phase of development is the **T3 Office Project**, which is proposed to comprise approximately 10,500 square feet of retail and approximately 200,000 square feet of office. Dock Street, a realigned private road, will provide access through the entire site and will have direct access to Washington Avenue.

In June 2011, Bonestroo prepared the Dock Street Residential Travel Demand Management Plan as part of the overall EAW for the site. Upon review of the phased development plans, the City of Minneapolis requested a specific Travel Demand Management Plan (TDMP) be prepared for each phase. In 2012, RLK Incorporated prepared a TDMP for Dock Street Flats development. This TDMP is specific for Phase II – the T3 Office Project. This phase comprises approximately 10,500 of retail and approximately 200,000 square feet of office land use. The Site Plan for this first phase is shown on Figure 1.

The Dock Street EAW prepared by Bonestroo detailed trip generation potential for the overall development. That analysis projected 637 trips generated for the full build-out of the development in the AM Peak Hour (462 trips entering and 175 exiting), and 689 trips generated in the PM Peak Hour (218 entering and 471 trips exiting). This TDMP will include trip generation figures specific to the land uses proposed for the site today.

© 2014 WESTWOOD PROFESSIONAL SERVICES, INC.

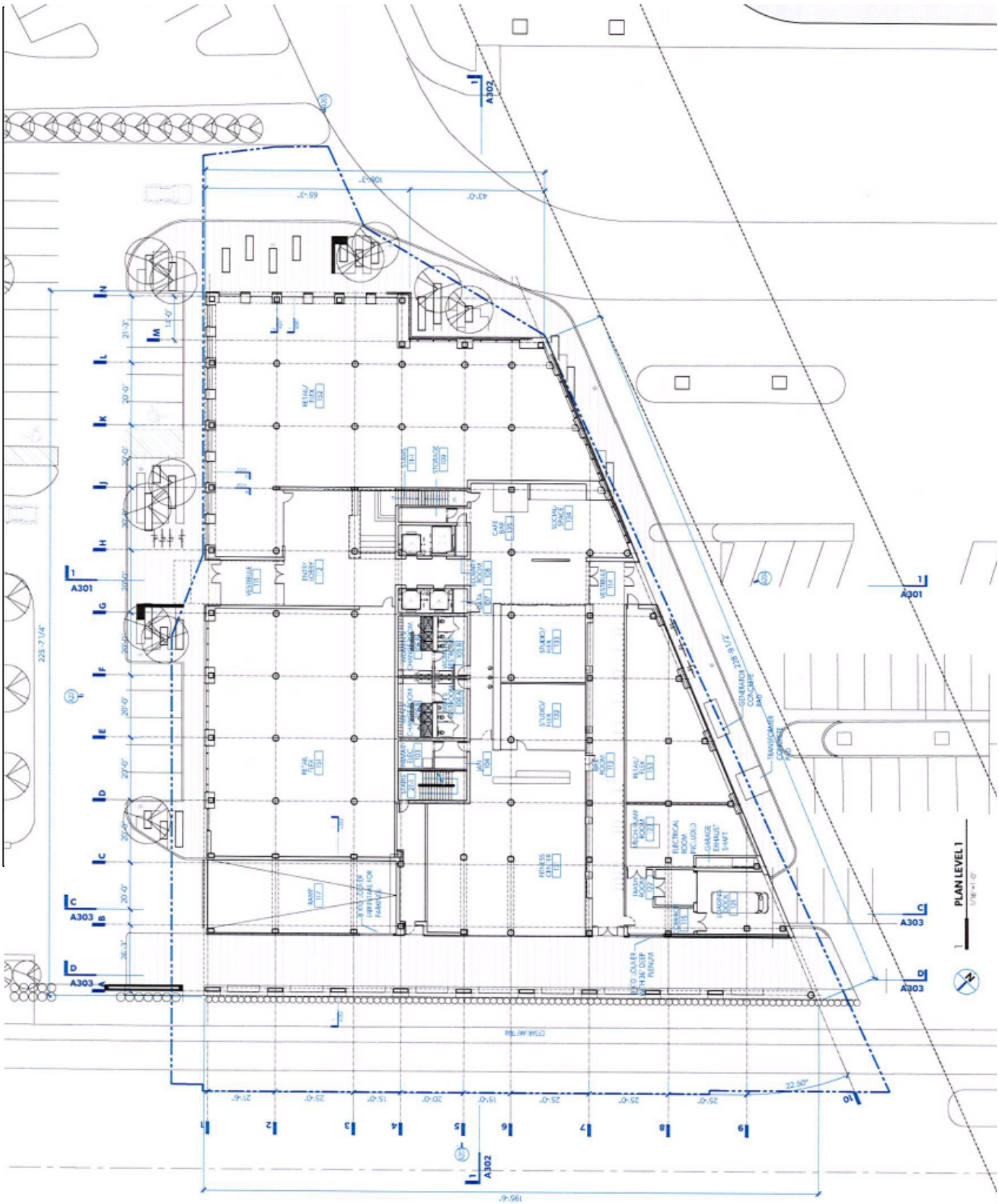

Nov 14, 2014 11:47am P:\0004973.00\docs\Traffic_Phase1\01-Site Plan.dwg

Westwood

Westwood Professional Services, Inc.
7699 Anagram Drive
Eden Prairie, MN 55344

PHONE 952-937-5150
FAX 952-937-5822
TOLL FREE 1-888-937-5150

www.westwoodps.com

T3 OFFICE PROJECT

SITE LAYOUT

Figure # 1

Project # 0004973

II. LAND USES AND ZONING

The current zoning of the site is as follows:

- **B4S-1, Downtown Service District,** this district "is established to provide an environment that promotes the development of mixed-use neighborhoods in a higher density, transit- and pedestrian-oriented, urban environment with a wide range of retail and office activities and high density residential uses and hotels. The B4S District also allows supportive goods and services not allowed in the B4 District."

- In **B4S Districts**, the ground floor of principal and accessory parking garages shall have commercial, residential, office, or hotel uses located between the parking garage and any public sidewalk except where frontage is needed to provide vehicular and pedestrian access to the facility. Principal parking garages shall have all parking spaces located entirely below grade except where the garage includes integrated transit facilities within the structure.

The T3 Office Project is proposed to have retail/flex and conference/flex uses on the ground floor, as well as a fitness center and bike room. Access to the subterranean parking and loading dock will also occur on the ground floor. (These can be seen on Figure 2.) The upper floors are office uses.

III. PEDESTRIAN, BICYCLE AND TRANSIT

The T3 Office Project location to the west of Washington Avenue affords the future occupants of the proposed development multiple opportunities for the use of alternative transportation modes. The site is adjacent to roadways with sidewalks and delineated bike lanes and near paved pedestrian and bike trails along the Mississippi River. Additionally, the site is adjacent to a primary bus route corridor, Washington Avenue, and one block away from the BLUE Line Light Rail Transit (LRT) line and the Minneapolis Multimodal station where LRT (BLUE Line and GREEN Line), commuter rail (Northstar), bus and bike routes converge. (Bike routes are shown on Figure 2.)

The development will have active pedestrian areas, and is specifically designed to be a transit-oriented development. By providing designated access to the Cedar Lake Trail directly adjacent to the building, the T3 Office Project will be a hub of activity as users circulate between the trail, the main entry, to Dock Street, to Traffic Street and up to Washington Avenue and to Third Street. In addition, the location of the T3 Office Project provides access to the Minneapolis CBD skyway system less than one block from the main entry of the development through the City of Minneapolis C-Ramp. The T3 Office Project is within a one-block walking distance to Target Field and Target Center.

The Cedar Lake Trail ties into the elaborate bike trail system of Minneapolis. This system would enable potential employees and customers to easily travel to other downtown locations such as the new Viking Stadium, the central business district, and Nicollet Mall as well as venture to the east across the Mississippi River into Northeast Minneapolis, Dinkytown and the University of Minnesota area. The on-street bike lanes trek south and connect to the Midtown Greenway, which provides access to Uptown, the city lakes and first tier western suburbs. It is noted that both 1st Avenue North and Hennepin Avenue between 1st Street North and 12th Street North are marked bike lanes. On 1st Avenue North there is a designated 5-foot marked on-street bike lane in each travel direction. On Hennepin Avenue there is a shared bike/bus/right turn lane in each travel direction.

Light rail and bus transit, which will provide quick access to many high priority destinations such as the Minneapolis-St. Paul International Airport, Mall of America, University of Minnesota, Minneapolis, St. Paul and the suburbs, are readily available near the site. Tenants and employees of the T3 Office Project will be able to access various modes of transit at the Target Field Station one block to the west of the site. The Blue Line Light Rail Transit line runs along Hiawatha Avenue connecting downtown Minneapolis (5th Street) to the airport and the Mall of America. The new Green Line LRT line provides connections to the University of Minnesota, the State Capitol and downtown Saint Paul. In the future, the Green Line will extend as the Southwest LRT line to Eden Prairie and other suburbs along the way. The Northstar Commuter

Rail line is also accessed at Target Field Station and offers connectors to communities to the north and west.

Additionally, bus transit is readily available near the site. Metro Transit route 14 passes in front of the site on a frequent basis and connects with many other routes in downtown. Bus routes adjacent to this site are shown on Figure 3. In addition, the Ramp B/5th Street Transit Center of the MTC is located within two blocks of the site.

The T3 Office Project will notify the employees of any shared car programs available within walking distance from the T3 Office Project. The "HOURCAR" system (www.hourcar.org) has a station located 2 blocks from the project site at North 6th Street and Washington Avenue N. Other shared vehicle providers, such as Car2Go (https://www.car2go.com/en/minneapolis/) and Zipcar (http://www.zipcar.com/minneapolis/find-cars) offer vehicles at sites throughout Minneapolis.

NiceRide Minnesota (https://www.niceridemn.org/) offers shared bicycles at stations throughout the Twin Cities. Users simply take a bicycle from a station when needed, and return it to any station in the system when the rider arrives at his/her destination. A bike dock (or station) is currently located two blocks to the east of the T3 Office Project, and another bike dock is located two blocks to the south of the office site. The success of NiceRide MN in the Twin Cities may lead to more bike docks in the future.

© 2014 WESTWOOD PROFESSIONAL SERVICES, INC.

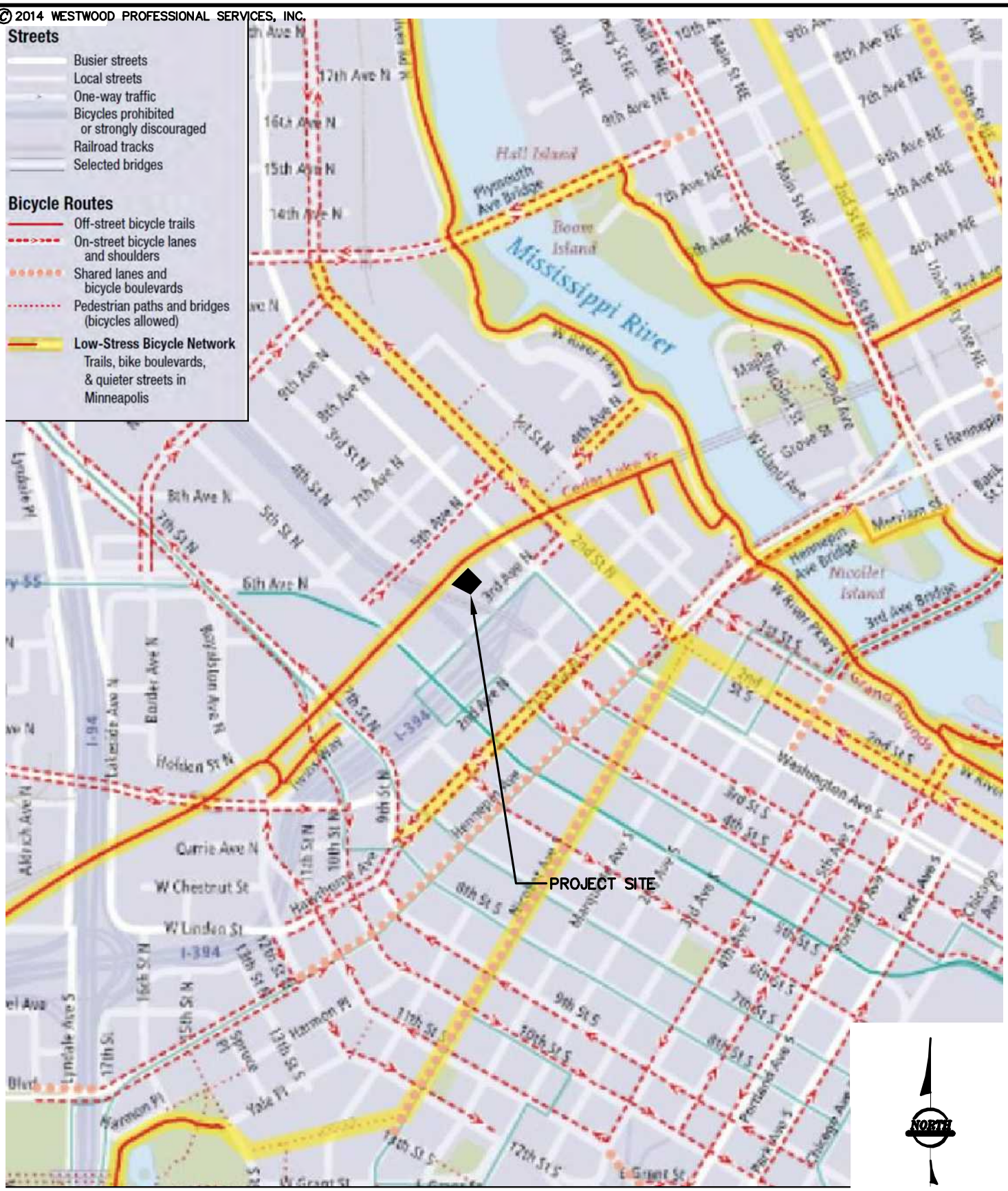

NOTES

LOCATION OF BICYCLE FACILITIES IS APPROXIMATE.
DATA FROM CITY OF MINNEAPOLIS WEB PAGE, JANUARY, 2012.

0 3/4
SCALE IN MILES

Westwood Professional Services, Inc.
7699 Anagram Drive
Eden Prairie, MN 55344

PHONE 952-937-5150
FAX 952-937-5822
TOLL FREE 1-888-937-5150

www.westwoodps.com

T3 OFFICE PROJECT

BICYCLE ROUTE NETWORK

Figure # 2

Project # 0004973

Nov 14, 2014 10:40am P:\0004973.00\docs\Traffic_Phase2\02-Bike Routes.dwg

© 2014 WESTWOOD PROFESSIONAL SERVICES, INC.

Downtown Minneapolis

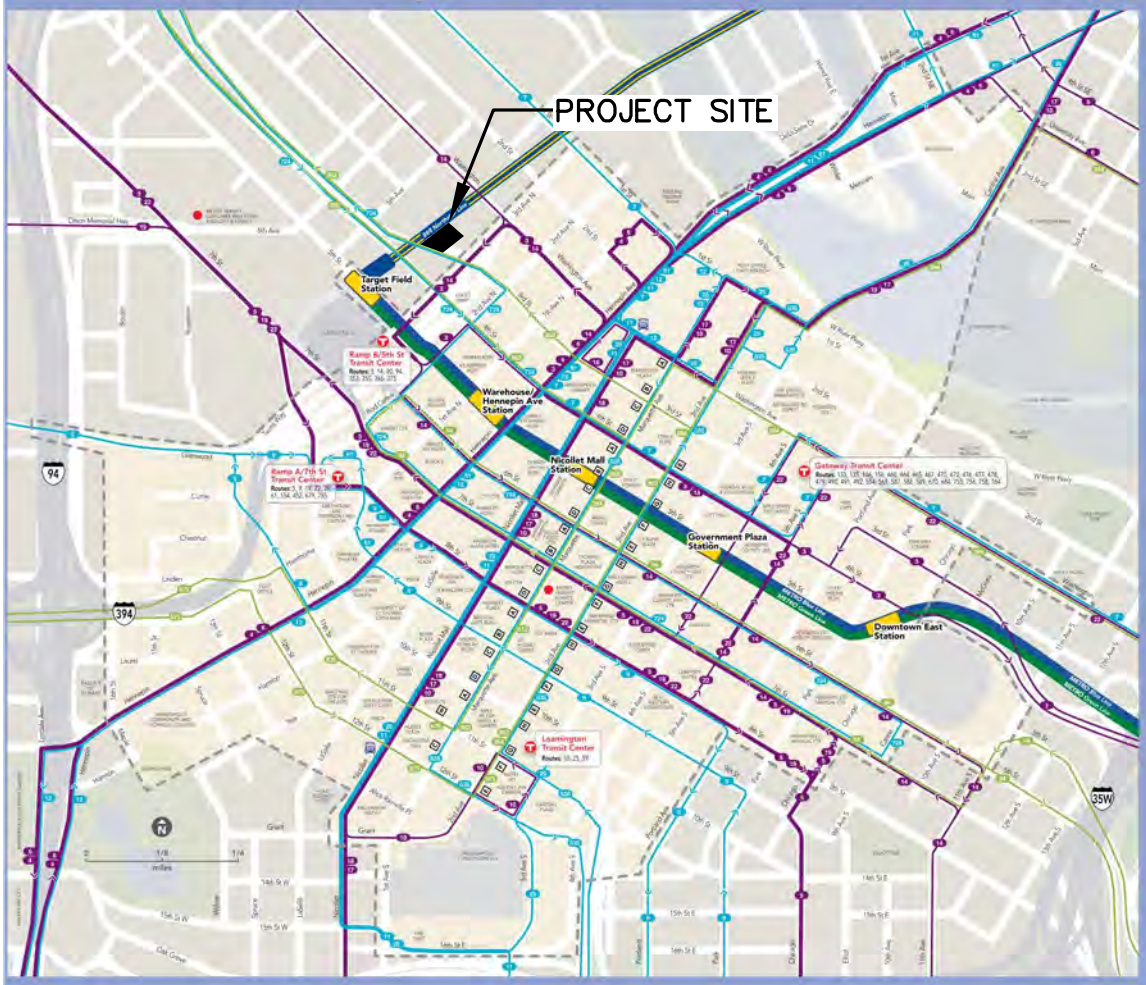

Downtown Map Legend

- **Downtown Zone Limit** Ride in the Downtown Zone for 50¢ (transfers not available). Board any bus or train going the direction you want to go.
- **Frequent Local Buses** Serve all stops and operate at least every 20 min. during middays on weekdays; more often during rush hours.
- **All-Day Local Buses** Serve all stops and operate throughout the day but may offer less frequent service.
- **All-Day Express Buses** Limited-stop or non-stop service that operates throughout the day on weekdays but may offer less frequent service.
- **Rush-Hour Buses** Not shown, see charts near maps to see where specific routes arrive and depart.
- **METRO Blue Line** Trains stop at all stations shown.
- **METRO Green Line** Trains stop at all stations shown.
- **Northstar Commuter Rail** Operates primarily during rush hours.
- **Rail Platform**
- **Transit Center/Station**
- **Transit Service Center** Get passes, route information and other transit help.
- **Lettered Stop** Express buses serve these stops on Marquette and 2nd avenues.
- **Free Rides on Nicollet Mall** Look for buses marked "Free Ride" between the Convention Center and Washington Avenue in Minneapolis.

Downtown maps show routes operating all day.

For routes that operate primarily during rush hours, refer to the charts near each map.

Downtown Minneapolis Local Routes

Route	Northbound via	Southbound via
4	Hennepin	Hennepin
6	Hennepin	Hennepin
10	Nicollet Mall	Nicollet Mall
11	Nicollet Mall	Nicollet Mall
12	Hennepin	Hennepin
17	Nicollet Mall	Nicollet Mall
18	Nicollet Mall	Nicollet Mall
25	Nicollet Mall	Nicollet Mall
61	Hennepin	Hennepin

Route	Eastbound via	Westbound via
3	4th St	4th St
5	8th St	7th St
7	4th St	4th St
9	8th St	9th St
14	6th St	4th St
19	8th St	7th St
20	10th St	9th St
22	8th St	7th St

Downtown Minneapolis Express/Limited-Stop Routes

Route	Arrives via	Leaves via
Blue Line	5th St	5th St
Green Line	5th St	5th St
39	7th St	8th St
59	Nicollet Mall	Nicollet Mall
94	7th St	6th St
133	2nd Ave S G	Marquette A
134	7th St	6th St
135	2nd Ave S G	Marquette A
141	Hennepin Ave	Hennepin Ave
146	2nd Ave S G	Marquette D
156	2nd Ave S G	Marquette A
250	Marquette C	2nd Ave S F
261	Marquette C	2nd Ave S F
263	Marquette C	2nd Ave S F
264	Marquette C	2nd Ave S F
270	Marquette C	2nd Ave S F
288	Marquette C	2nd Ave S F
353	7th St	6th St
355	7th St	6th St
365	7th St	6th St
375	7th St	6th St
452	7th St	6th St
460	2nd Ave S E	Marquette C
464	2nd Ave S E	Marquette C
465	2nd Ave S E	Marquette C
467	2nd Ave S E	Marquette D
470	2nd Ave S E	Marquette C
472	2nd Ave S E	Marquette C
475	2nd Ave S E	Marquette C
476	2nd Ave S E	Marquette C
477	2nd Ave S E	Marquette C
478	2nd Ave S E	Marquette C
479	2nd Ave S E	Marquette C

Letters next to street names indicate which stops these buses serve along Marquette and 2nd avenues.

Route	Arrives via	Leaves via
490	2nd Ave S F	Marquette A
491	5th Ave S	4th Ave S
492	5th Ave S	4th Ave S
535	2nd Ave S G	Marquette D
552	2nd Ave S G	Marquette D
553	2nd Ave S G	Marquette D
554	2nd Ave S G	Marquette A
558	2nd Ave S G	Marquette A
568	Nicollet Mall	Nicollet Mall
578	2nd Ave S G	Marquette D
587	2nd Ave S H	Marquette B
588	2nd Ave S H	Marquette B
589	2nd Ave S H	Marquette B
597	2nd Ave S G	Marquette D
643	6th St	9th St
649	6th St	9th St
663	6th St	9th St
664	2nd Ave S H	Marquette B
667	2nd Ave S H	Marquette B
668	2nd Ave S H	Marquette B
670	2nd Ave S H	Marquette B
671	2nd Ave S H	Marquette B
672	2nd Ave S H	Marquette B
673	2nd Ave S H	Marquette B
674	2nd Ave S H	Marquette B
675	2nd Ave S H	Marquette B
677	2nd Ave S H	Marquette B
679	RampA/7th St Transit Center	—
684	2nd Ave S F	Marquette D
690	2nd Ave S F	Marquette D
691	2nd Ave S F	—
692	2nd Ave S F	Marquette D
697	2nd Ave S F	Marquette D

Route	Arrives via	Leaves via
698	2nd Ave S F	Marquette D
699	2nd Ave S F	Marquette D
721	6th St	7th St
724	6th St	7th St
742	2nd Ave S F	Marquette A
747	2nd Ave S F	Marquette A
755	8th St	7th St
756	2nd Ave S H	Marquette B
758	6th St	7th St
760	Marquette D	2nd Ave S E
761	Marquette D	2nd Ave S E
762	Marquette D	2nd Ave S E
763	Marquette B	2nd Ave S E
764	6th St	7th St
765	Marquette B	2nd Ave S H
766	Marquette D	2nd Ave S H
767	Marquette D	2nd Ave S E
768	Marquette D	2nd Ave S H
772	2nd Ave S F	Marquette A
774	—	Marquette A
776	2nd Ave S F	Marquette A
777	2nd Ave S F	Marquette A
780-785	Marquette D	2nd Ave S H
790	2nd Ave S F	Marquette A
793	2nd Ave S F	Marquette A
795	—	Marquette A
824	Marquette B	2nd Ave S G
825	Marquette A	2nd Ave S G
850	Marquette B	2nd Ave S G
852	Marquette B	2nd Ave S G
854	Marquette B	2nd Ave S G
865	Marquette B	2nd Ave S G
888	Target Field Station	Target Field Station

NOTES

LOCATION OF BUS ROUTES IS APPROXIMATE.
DATA FROM METRO TRANSIT WEB PAGE IN NOVEMBER 2014.

Westwood Professional Services, Inc.
7699 Anagram Drive
Eden Prairie, MN 55344

PHONE 952-937-5150
FAX 952-937-5822
TOLL FREE 1-888-937-5150

www.westwoodps.com

T3 OFFICE PROJECT

BUS ROUTES

Figure # 3

Project # 2011164M

Nov 14, 2014 10:39am P:\0004973.00\docs\Traffic_Phase2\03-Bus Routes.dwg

IV. PARKING

A. Parking Requirements

The T3 Office Project will include 65 parking stalls on 1 subterranean parking level that are fully enclosed. There will be ten (10) surface visitor stalls available for T3 tenants to use and one loading space (to the west of the building).

The T3 Office Project development is located in the B4S-1 Zoning District. According to the Minneapolis Municipal Code:

- The B4S Downtown Service District is established to provide an environment that promotes the development of mixed-use neighborhoods in a higher density, transit- and pedestrian-oriented, urban environment with a wide range of retail and office activities and high density residential uses and hotels. The B4S District also allows supportive goods and services not allowed in the B4 District.

- In B4S Districts, the ground floor of principal and accessory parking garages shall have commercial, residential, office, or hotel uses located between the parking garage and any public sidewalk except where frontage is needed to provide vehicular and pedestrian access to the facility. Principal parking garages shall have all parking spaces located entirely below grade except where the garage includes integrated transit facilities within the structure.

The T3 Office Project site is also located in the Downtown Parking Overlay District. The parking requirements for uses in the downtown district are subject to Table 541-2 of the Minneapolis Municipal Code; which specifies there is no minimum vehicular parking requirement for uses in the downtown districts. There are, however, maximum parking requirements:

- Maximum Parking - Office uses. 1 space per 1000 sq. ft. of GFA.

- Maximum Parking - Retail uses. 1 space per 500 sq. ft. of GFA (excluding grocery stores).

The T3 Office Project provides 65 off-street parking stalls. The maximum number of stalls for office uses in downtown districts is 1 space per 1000 sq. ft. of GFA (200,000 sq. ft. / 1000 = 200 stalls). For the retail use, there is a maximum parking requirement of 1 stall per 500 square feet (10,500 sq. ft. / 1000 = 11 stalls). Off-street parking for both uses is less than the maximum allowed of 211 stalls.

B. Bicycle Parking

According to the Minneapolis City Code, office uses shall have 1 bicycle parking space per 5,000 sq. ft. of GFA (40 spaces). In addition, for the retail space, the B4S-1 zoning district requires 3 spaces per use.

There are 100 bike stalls proposed for the T3 Office Project. All of the bikes stalls are proposed to be provided in the bike room of the building, located through the west entrance of the building.

In addition to the indoor bike stalls identified above, approximately 14 bike rack spaces are available for public/guest use adjacent to the Cedar Lake Trail access point.

C. Loading

The Minneapolis City Code stipulates that one (1) large loading space for office uses with thirty thousand (30,000) to one hundred thousand (100,000) sq. ft. of gross floor area plus one (1) large loading space for each additional one hundred thousand (100,000) sq. ft. of gross floor area up to five hundred thousand (500,000) sq. ft. Therefore two (2) large loading spaces are required for this development.

Based on the projected occupancy, size of the project and expected volumes of deliveries, Hines does not believe two enclosed loading spaces are warranted. Should two deliveries be made simultaneously, the second delivery vehicle will be able to stop on the private access lane heading to the loading dock. This access lane is for the limited use of the T3 office project and due to its location well away from any public streets, will not affect any City of Minneapolis streets, alleys or rights of way.

V. TRAFFIC OPERATIONS

Table 1 below details the trip generation potential of the T3 Office Project of the overall Dock Street development.

Table 1 - ITE Trip Generation (T3 Office Project)						
Average Weekday Driveway Volumes			**AM Peak Hour**		**PM Peak Hour**	
Land Use	ITE Land Code	Size	Enter	Exit	Enter	Exit
General Office Building	710	200,000 SF	293	40	51	251
Specialty Retail	826	10,500 SF	0	0	13	16
Unadjusted Weekday Trips			**293**	**40**	**64**	**267**
Reduction (transit)	*15% for office,* *5% retail*		-44 0	-6 0	-8 -1	-38 -1
Reduction (bike/pedestrian)	*5% for office,* *15% retail*		-15 0	-2 0	-3 -2	-13 -2
Internal Capture	*Utilizing worksheet calculations from EAW*		0	0	-1	-1
Total Weekday Trips			**234**	**32**	**49**	**212**

These results show 266 trips being generated solely by the T3 Office Project development in the AM Peak Hour (234 trips entering and 32 exiting), and 261 trips generated in the PM Peak Hour (50 entering and 213 trips exiting). The following table shows the total trips generated from Dock Street Phase 1 (Dock Street Apartments) and Phase 2 (T3 Office Project):

Table 2 - Total Trip Generation (Dock Street Phases 1 & 2)				
Adjusted Average Weekday Driveway Volumes	**AM Peak Hour**		**PM Peak Hour**	
Phase I – Dock Street Flats	10	30	28	18
Phase 2 – T3 Office Project	234	32	49	213
Total	**244**	**62**	**77**	**231**

A traffic analysis of the full Dock Street development was completed by Bonestroo as part of the original EAW submittal.[1] This document, entitled Dock Street Residential Travel Demand Management Plan was labeled Appendix C of the EAW. (It is also attached to the end of this document for additional background information.)

That Traffic Impact Study found in the EAW's Appendix C estimated 637 AM Peak Hour trips and 689 P.M. Peak Hour trips for the overall Dock Street Development. In comparison, Dock Street Phases 1 & 2 actually represents 48% of the overall A.M. Peak Hour potential. Further, it represents 45% of the P.M. Peak Hour potential assumed for the overall development. Therefore, it is concluded that the Dock Street Flats and T3 Office Project will generate fewer trips than were previously anticipated and approved by the City of Minneapolis.

[1] Appendix C – Dock Street Residential Travel Demand Management Plan, prepared by Bonestroo Inc., Saint Paul, MN, as part of the Environmental Assessment Worksheet for the Dock Street Residential project, for Hines, June 29, 2011.

VI. TRAVEL DEMAND MANAGEMENT STRATEGIES

The following represents a list of Travel Demand Management Strategies that Hines, and its successors, specifically commits to follow in operating and managing the T3 Office Project:

A. City of Minneapolis Transportation Goals

The City of Minneapolis has developed a Ten-Year Transportation Action Plan that provides a vision of the future that states, "Minneapolis will build, maintain and enhance access to multi-modal transportation options for residents and business through a balanced system of transportation modes that supports the city's land use vision, reduces adverse transportation impacts, decreases the overall dependency on automobiles, and reflects the city's pivotal role as the center of the regional transportation network." – The Minneapolis Plan for Sustainable Growth, (2008).

From this has emerged their "Transportation Vision for Minneapolis":

- Transportation is important to the economic viability of the city, the region and the state. *Access Minneapolis* will lay the transportation groundwork for achieving the long-range vision of Minneapolis as a vital and thriving metropolitan urban center that is a great place to live, work, play, visit and conduct business.

- The city must remain livable and walkable to maintain its regional and national competitiveness. In most cases, it is not feasible or desirable to increase the curb-to-curb width of roadways in the city. However, there are many opportunities for improving the operational capacity of the transportation system without street widening. *Access Minneapolis* will result in a city that is livable and walkable while optimizing the operational capacity of the transportation system.

- *Access Minneapolis* will result in a citywide transportation system that is multi-modal (pedestrian, bicycle, transit, automobile, freight), providing good transportation choices to people, including people with disabilities.

- *Access Minneapolis* will result in a citywide transportation system that serves anticipated employment and residential growth and optimizes access to destinations by all modes (pedestrian, bicycle, transit, automobile, freight) throughout the city, between neighborhoods, to/from and within downtown.

- Although all modes of transportation are important, transit is critical for maximizing the people carrying capacity of the transportation system. *Access Minneapolis* will result in a transit system that operates efficiently and effectively in downtown and throughout the

city. Transit will become the mode of choice for Minneapolis residents, workers and visitors.

With this vision in mind, the City of Minneapolis has developed Transportation Policies from "The Minneapolis Plan for Sustainable Growth" (2008). Key goals of this include:

- Building the City through multi-modalism;
- Developing modal priorities in a neighborhood context;
- Creating a walkable city;
- Making transit more effective;
- Creating a bicycle-friendly city;
- Managing vehicle traffic;
- Managing freight movement;
- Managing Parking;
- Developing funding and pricing strategies; and
- Supporting a vibrant multi-modal Downtown.

B. City of Minneapolis Transportation Policy Points

The following policy points for transportation are included in Chapter 2 of the Minneapolis Plan for Sustainable Growth:

Policy 1: Encourage growth and reinvestment by sustaining the development of a multi-modal transportation system.

Policy 2: Support successful streets and communities by balancing the needs of all modes of transportation with land use policy.

Policy 3: Encourage walking throughout the city by ensuring that routes are safe, comfortable, pleasant, and accessible.

Policy 4: Make transit a more attractive option for both new and existing riders.

Policy 5: Ensure that bicycling throughout the city is safe, comfortable and pleasant.

Policy 6: Manage the role and impact of automobiles in a multi-modal transportation system.

Policy 7: Ensure that freight movement and facilities throughout the city meet the needs of the local and regional economy while remaining sensitive to impacts on surrounding land uses.

Policy 8: Balance the demand for parking with objectives for improving the environment for transit, walking and bicycling, while supporting the city's business community.

Policy 9: Promote reliable funding and pricing strategies to manage transportation demand and improve alternative modes.

Policy 10: Support the development of a multi-modal Downtown transportation system that encourages an increasingly dense and vibrant regional center.

Policy 11: Minneapolis recognizes the economic value of Minneapolis-St. Paul International Airport and encourages its healthy competition to reach global markets in an environmentally responsible manner.

C. Goal of the Travel Demand Management Plan

The purpose of this Travel Demand Management (TDM) plan is to assist the City of Minneapolis in achieving its overall transportation goals discussed earlier. The plan encourages employees and patrons to utilize alternative modes of transportation other than driving alone. This Travel Demand Management plan identifies actions to manage and minimize the vehicle trips and parking generation by the development.

D. Specific Travel Demand Management Strategies

To succeed, this Travel Demand Management (TDM) plan must assist the City of Minneapolis to achieve its transportation goals. Based on previous TDM Plans in the area and the types of proposed land uses, the following mode split goals for the project have been identified by the developer:

Table 3
Mode Split Goals

Mode Split	Goal
Auto	55%
Transit	35%
Bike/Walk	10%

The owners and/or TDM Liaison will work to achieve a mode share goal percentage of 45% non-single-occupant-vehicles for the residential development.

Specific Travel Demand Management Strategies

This section outlines specific Travel Demand Management strategies to be implemented by the owner/end user/property manager/etc., of this site. The strategies detail the responsibilities of the site's responsible party in addressing the issues regarding transportation cited above.

The City has already established certain standard design features that aid and encourage travel demand management. The developer will include these standards in their design. These include sidewalks impacted by construction that will be rebuilt with ADA-compliant tactile dome curb ramps, encouraging use by pedestrians of all abilities.

The location of the T3 Office Project provides unparalleled access and ease of use to virtually every type of transit available in the Twin Cities metropolitan area.

- Target Field Station, of the BLUE and GREEN LRT Lines, within one block of T3 Office Project, with future connections to the Southwest LRT Line
- Target Field Station, of the Northstar Commuter Rail, within one block of the T3 Office Project
- The Interchange Transit Hub is located within one block of the T3 Office Project and will be a main connection point for light rail, commuter rail, buses and bicycles.
- Minneapolis CBD Skyway access point within one block of the T3 Office Project.
- MTC bus transit stops immediately adjacent to the T3 Office Project on Washington Ave.
- Ramp B/5th Street Transit Center of the MTC bus system within two blocks of the T3 Office Project.
- Access to Cedar Lake Bicycle and Pedestrian Trail is immediately adjacent to the T3 Office Project site.
- Street level pedestrian access to the Minneapolis CBD, the region's largest employment center, the region's largest entertainment center and the region's largest cultural center, within 4 blocks of the T3 Office Project.

Hines, and its successors, by accepting the responsibility of implementing the items below, desire to help Minneapolis in achieving its goals of enhancing the local transportation system. Implementation of the items noted will help to encourage use of alternate modes of travel, enhance pedestrian friendliness, and achieve a balance in the needs of all users of the transportation system.

Hines and its successors specifically commit to the implementation of the following measures:

A. General

1. The owners will contract with one of the major professional property management firms and will include in their scope of services the responsibilities to support and execute the implementation of the specific strategies identified herein. In addition, the owner and property manager will place a high priority to continually identify, evaluate and implement future travel demand management strategies to increase the use of non-vehicle based transit for the residents and citizens of the Twin Cities area.

2. The owner/property manager will designate a Transportation Coordinator (TC) to actively coordinate the implementation and maintenance of the Travel Demand Management (TDM) strategies. This coordinator will function as a liaison with the Minneapolis TMO.

3. The owners/property managers of the site shall maintain clear, well-lit sidewalks for pedestrian ease of use.

4. The owners will contract with one of the major professional property management firms – one who has experience in distributing alternative transportation options to employees upon hire. This information will highlights available transit routes, links to "Go-Cards", bicycle and pedestrian routes. This information will also be available to the employees in the break rooms, lobbies, and bike room, as well as on the building's website.

B. Transit/Carpool

1. The TC will assemble and maintain displays of commuter information in common areas of the T3 Office Project Management Office and will distribute this information directly to each tenant upon move-in as well as providing updates to existing tenants as warranted, which will include but not be limited to:

    - Bus Transit Schedules, Routes and Stop Locations
    - LRT Transit Schedules, Routes and Stop Locations
    - Commuter Rail Schedules, Routes and Stop Locations
    - Carpool/Vanpool Programs and Proximity to the T3 Office Project
    - Shared Car Programs and Proximity to the T3 Office Project
    - Bicycle/Pedestrian Programs and Maps
    - Other pertinent transit related materials

2. The TC will provide employees with information regarding availability of discounted transit passes and special promotions when available to encourage employees to consider transit options.

3. The TC will coordinate with the Transit Service Providers to conduct on-site Transit Fairs. The Fairs may include spring and fall bicycle tune-up clinics, safety seminars, updates on bicycle trail additions, upcoming maintenance notices and information on upcoming events in the Twin Cities area which may affect pedestrian/bicycle uses.

4. The TC will coordinate activities with the Minneapolis TMO to develop and conduct travel behavior surveys, at the cost of the Minneapolis TMO.

5. Appropriate maps identifying and directing tenants, employees and guests to the Metro Transit stations nearby will be distributed to the tenants' offices on a regular basis.

6. The TC for the T3 Office Project will notify the employees of any shared car programs available within walking distance from the T3 Office Project. The "HOURCAR" system

(www.hourcar.org) has a station located 2 blocks from the project site at North 6th Street and Washington Avenue N. Based on discussions with the HOURCAR management the owner will make an exterior parking space on the project site available for location of an HOURCAR station should it be so desired. (NOTE: The owner and managers of the T3 Office Project will not be purchasing an "HOURCAR", only making a parking space available for one.)

7. The property manager will provide preferred parking in the parking garage for registered employer carpools/vanpools.

C. Bicycles

1. The owner will provide a connection through the T3 Office Project site for bicycle access to the Cedar Lake Trail for both employees and the public.

2. The owner will provide within the T3 Office Project secure bicycle storage in the bike room of the building for employees and patrons. A minimum of one hundred (100) bike spaces will be provided between the bike room and outdoor racks.

3. The TC will notify employees of shared bicycle programs in the immediate area of the T3 Office Project site. The owner/property manager will coordinate with Nice Ride Minnesota (www.niceridemn.org) to determine if the site is an appropriate location for a Nice Ride Station and will provide a convenient location for the station should it be determined that the location is appropriate. Four Nice Ride Stations are within an approximately 2 block radius of the site with the closest being the North 2nd Street-4th Avenue North Station.

4. The owner/property manager will implement a shared bicycle program for the employees of the T3 Office Project. The building will initially have six (6) bicycles docked in the parking garage which residents will be able to check out and return on an as-needed/as-available basis.

D. Deliveries

1. Owners/property managers shall develop and maintain a policy that provides for truck and service deliveries to occur outside of peak traffic times. This would not include FedEx/UPS-type deliveries. A service bay for delivery vehicles to park is provided with access along the southwest side of the building.

E. Parking

1. All parking provided in the subterranean garage and project site of the T3 Office Project is specifically designated for employees of T3 Office Project, guests, and patrons. No general public parking will be available at the project site.

2. Lessees and owners of the T3 Office Project development will not be allowed to resell their designated parking stalls to the general public or other interests.

F. Pedestrians

1. The location of the T3 Office Project provides access to the Minneapolis CBD skyway system less than one block from the main entry to the T3 Office Project through the City of Minneapolis C-Ramp. Appropriate maps of the Skyway System and specific assess points will be provided in the transit display area to assist employees and patrons in locating access to and use of the system.

2. The owner/property manager will provide and maintain clear, well-lit sidewalks within the property connecting to the municipal sidewalk system for ease of pedestrian use.

3. The owner/property manager will provide and maintain a connection to the Cedar Lake Trail pedestrian walkway for access by the employees, customers, and the public.

TRAVEL DEMAND MANAGEMENT PLAN
T3 OFFICE PROJECT
MINNEAPOLIS, MN

PLAN APPROVAL

T3 Office Project

By: _____ Dated: _____

David Spillman
Hines North Loop Green, LLC
90 South 7th Street, Suite 200
Minneapolis, MN 55402

Minneapolis Community and Economic Development Department

By: _____ Dated: _____

CPED Development Services Director

_____

Printed Name and Title

Minneapolis Public Works Department

By: _____ Dated: _____

Traffic Operations Engineer

_____

Printed Name and Title

VII. APPENDIX

Hines North Loop Green LLC

NAME OF APPLICANT

3rd

WARD

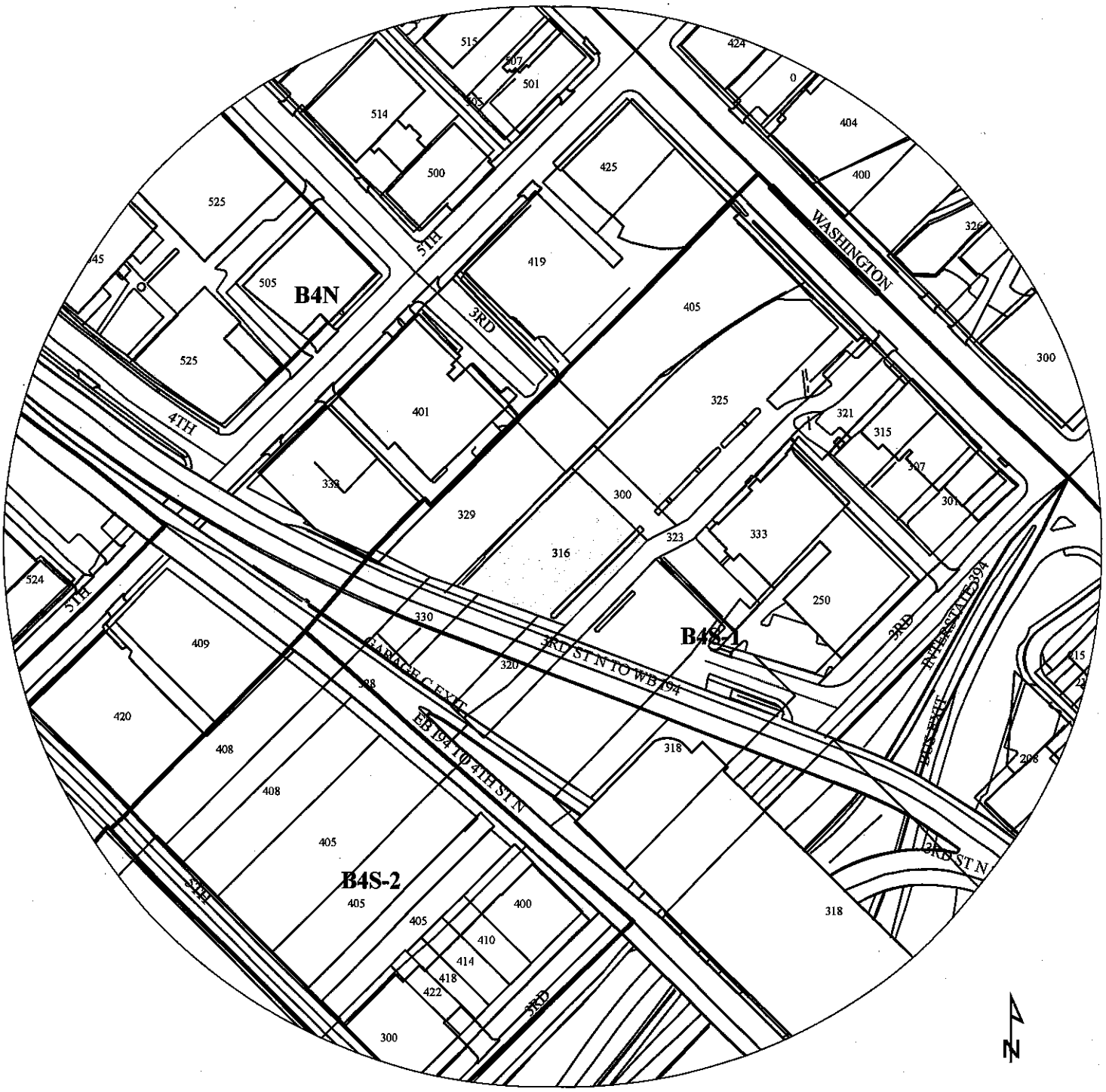

200 100 0 200 400

PROPERTY ADDRESS

316 Third Avenue North

FILE NUMBER

BZZ-7068

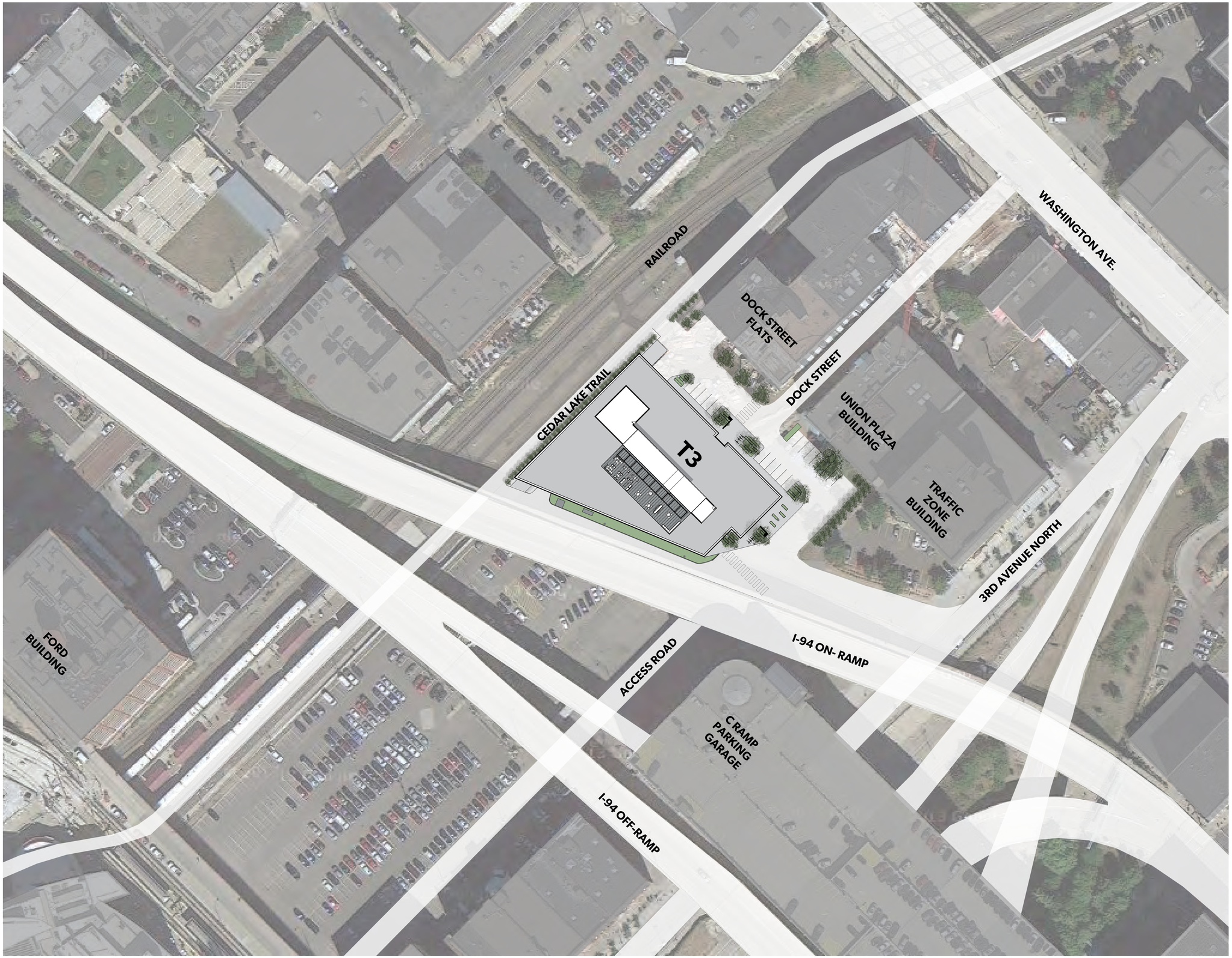

MINNEAPOLIS T3

LAND-USE APPLICATION
SUBMISSION

27 FEBRUARY 2015

HINES NORTHSTAR CROSSINGS LIMITED PARTNERSHIP
90 SOUTH 7TH STREET, SUIT 150
MINNEAPOLIS, MN 55402

MGA | MICHAEL GREEN ARCHITECTURE
WITH **DLR** GROUP

LOCATION PLAN

N

DRAWING LIST

ARCHITECTURAL

	COVER	NTS
A001	DRAWING LIST/PROJECT INFO/LOCATION	NTS
A004	SITE PHOTOS - STREET VIEWS	
A005	SITE PHOTOS - AERIAL VIEWS	
A006	BUILDING TYPOLOGIES- WINDOW TYPES	
A201	ELEVATIONS - NORTH	3/32" = 1'-0"
A202	ELEVATIONS - EAST	3/32" = 1'-0"
A203	ELEVATIONS - WEST	3/32" = 1'-0"
A204	ELEVATIONS - SOUTH	3/32" = 1'-0"
A041	HPC - CONTEXT RENDERINGS	NTS
A042	HPC - CONTEXT RENDERINGS	NTS
A043	HPC - CONTEXT RENDERINGS	NTS
A044	HPC - CONTEXT RENDERINGS	NTS
A050	AREA PLAN - NORTH LOOP GREEN	1/60" = 1'-0"
A051	SITE PLAN	1/16" = 1'-0"
A100	PLAN - PARKING LEVEL	1/16" = 1'-0"
A101	PLAN - LEVEL 1	1/16" = 1'-0"
A102	PLAN - LEVELS 2	1/16" = 1'-0"
A103	PLAN - LEVELS 3-7	1/16" = 1'-0"
A108	PLAN - ROOF	1/16" = 1'-0"
A010	RENDERINGS	NTS
A011	RENDERINGS	NTS
A012	RENDERINGS	NTS
A013	RENDERINGS	NTS
A014	RENDERINGS	NTS
A801	EXTERIOR DETAILS	1/2" = 1'-0"
A802	EXTERIOR DETAILS	1/2" = 1'-0"

LANDSCAPE

L100	LANDSCAPE PLAN	1" = 20' -0"

CIVIL

C1-1	EXISTING CONDITIONS PLAN	NTS
C1-2	SITE DEMOLITION PLAN	NTS
C2-1	SITE PLAN	NTS
C3-1	GRADING AND DRAINAGE PLAN	NTS
C3-2	STORM WATER POLLUTION PREVENTION	NTS
C4-1	UTILITY PLAN	NTS
C4-2	SCHEMATIC UTILITY PLAN	NTS
C8-1	DETAIL SHEET	NTS
C8-2	DETAIL SHEET	NTS

PROJECT TEAM

CLIENT

Hines
Wells Fargo Center
90 South 7th Street, Suite 150
Minneapolis, MN 55402
Contact: David Spillman

DESIGN ARCHITECT
Michael Green Architecture Inc.
57 East Cordova Street
Vancouver, BC V6A 1K3
Contact: Candice Nichol

ARCHITECT OF RECORD

DLR Group
520 Nicollet Mall, Suite 200
Minneapolis, MN 55402
Contact: Scott Boyle

STRUCTURAL

Magnusson Klemencic Associates
1301 Fifth Avenue, Suite 3200
Seattle, WA 98101-2699
Contact: Leif Johnson

MECHANICAL + ELECTRICAL

Dunham Engineering
50 S 6th Street, Suite 1100
Minneapolis, MN 55402
Contact: Randy Olson

ELEVATOR

Persohn/ Hahn Associates
908 Town & Country Blvd, Suite 120
Houston, TX 77024
Contact: Herb Smith

LANDSCAPE

Damon Farber Associates
401 Second Avenue N, Suite 410
Minneapolis, MN 55401
Contact: Tom Whitlock

GEOTECHNICAL

Loucks Associates
7200 Hemloack Lane, Suite 300
Maple Grove, MN 55369
Contact: Henry D. Nelson

MGA
© MGA | 2014
DLR Group

MICHAEL GREEN ARCHITECTURE
63 E CORDOVA STREET
VANCOUVER BC
CANADA V6A 1K3

DLR Group
520 NICOLLET MALL, SUITE 200
MINNEAPOLIS MN
USA 55402

DATE	REVISION	DESCRIPTION
2015 02 27		ISSUED FOR LAND-USE APP.
2015 01 12		REISSUED FOR HPC CoA
2015 01 06		REISSUED FOR PDR
2014 12 24		ISSUED FOR DD
2014 12 15		ISSUED FOR HPC CoA
2014 12 05		ISSUED FOR PRICING ADDEN.
2014 11 17		ISSUED FOR PDR
2014 11 03		ISSUED FOR PRICING
2014 10 27		ISSUED FOR HPC/PLANNING
2014 10 15		ISSUED FOR SCHEMATIC DESIGN

MINNEAPOLIS T3
MINNEAPOLIS, MN
2014 015

A001
PROJECT INFORMATION

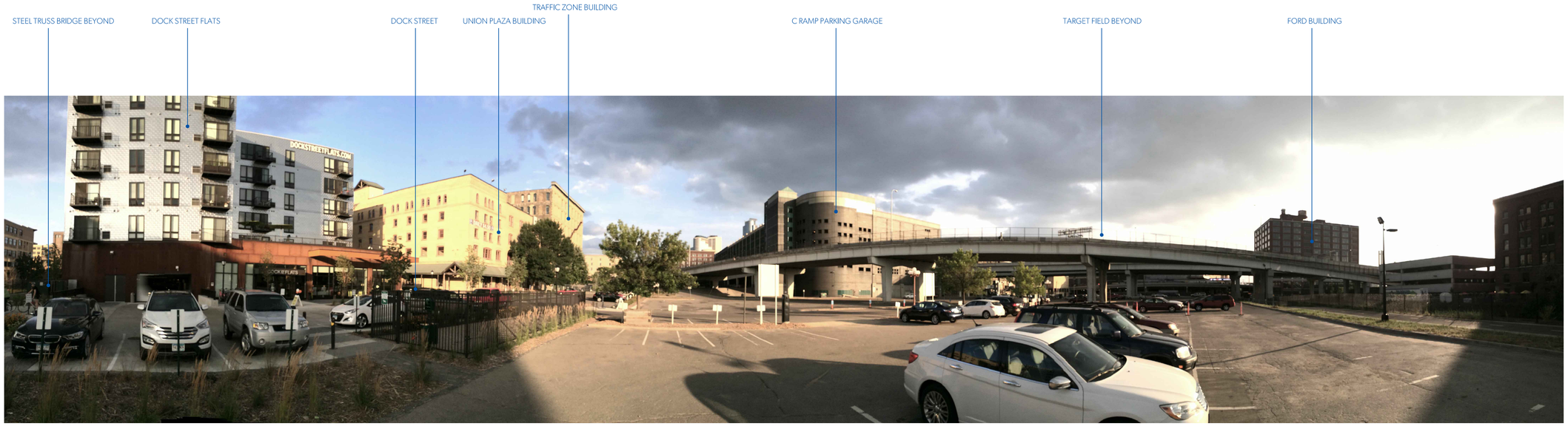

1 **EXISTING SITE LOOKING FROM BIKE PATH**
A004

2 **EXISTING SITE LOOKING FROM BIKE PATH**
A004

3 **EXISTING SITE LOOKING FROM PARKING LOT**
A004

MGA
© MGA | 2014
DLR Group

MICHAEL GREEN ARCHITECTURE
63 E CORDOVA STREET
VANCOUVER BC
CANADA V6A 1K3

DLR Group
520 NICOLLET MALL, SUITE 200
MINNEAPOLIS MN
USA 55402

DATE	REVISION	DESCRIPTION
2015 02 27		ISSUED FOR LAND-USE APP.
2015 01 12		REISSUED FOR HPC CoA
2015 01 06		REISSUED FOR PDR
2014 12 24		ISSUED FOR DD
2014 12 15		ISSUED FOR HPC CoA
2014 12 05		ISSUED FOR PRICING ADDEN.
2014 11 17		ISSUED FOR PDR
2014 11 03		ISSUED FOR PRICING
2014 10 27		ISSUED FOR HPC/PLANNING
2014 10 15		ISSUED FOR SCHEMATIC DESIGN

MINNEAPOLIS T3
MINNEAPOLIS, MN
2014 015

A004
SITE PHOTOGRAPHS

1 **LOOKING NORTH**

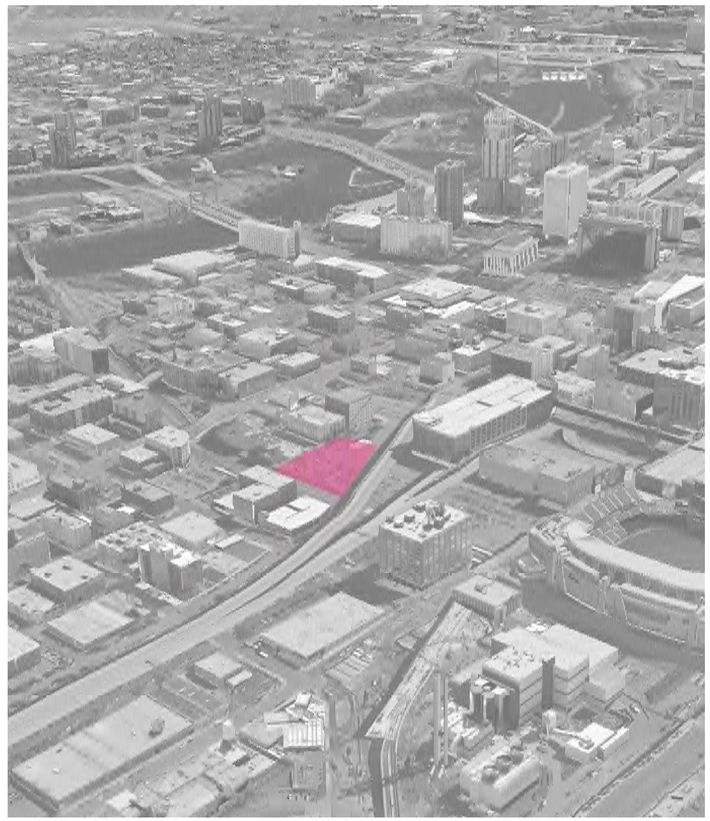

2 **LOOKING WEST**

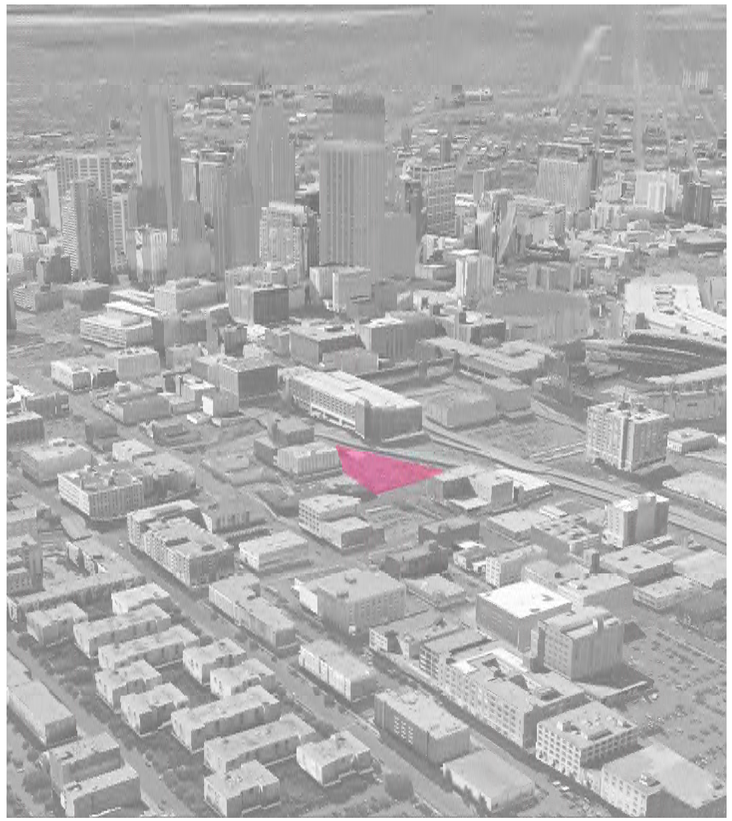

3 **LOOKING SOUTH**

MGA
© MGA | 2014
DLR Group

MICHAEL GREEN ARCHITECTURE
63 E CORDOVA STREET
VANCOUVER BC
CANADA V6A 1K3

DLR Group
520 NICOLLET MALL, SUITE 200
MINNEAPOLIS MN
USA 55402

DATE	REVISION	DESCRIPTION
2015 02 27		ISSUED FOR LAND-USE APP.
2015 01 12		REISSUED FOR HPC CoA
2015 01 06		REISSUED FOR PDR
2014 12 24		ISSUED FOR DD
2014 12 15		ISSUED FOR HPC CoA
2014 12 05		ISSUED FOR PRICING ADDEN.
2014 11 17		ISSUED FOR PDR
2014 11 03		ISSUED FOR PRICING
2014 10 27		ISSUED FOR HPC/PLANNING
2014 10 15		ISSUED FOR SCHEMATIC DESIGN

MINNEAPOLIS T3
MINNEAPOLIS, MN
2014 015

A005
AERIAL PHOTOS

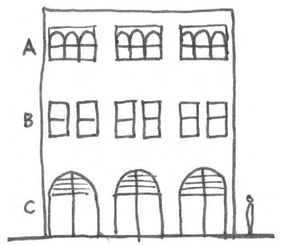

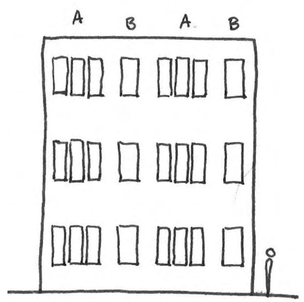

The proposed design marries traditional, industrial proportions with modern materials and detailing. The proposed T3 project is respectful of its neighborhood and responds to its context with a simple massing. The form and exterior articulation create a quiet building- responding to and complementing the historical buildings rather than drawing attention to it.

By studying the existing building stock in the warehouse district, the design team identified common design themes for the massing and window systems. Four different approaches to window composition emerged from the neighborhood and ultimately two solutions were deemed most appropriate for the building's use, location and views in and out of the building.

This neighborhood analysis of the historical building typologies also informed the strong vertical rhythm of piers clad in pre-weathered corrugated corten steel. These piers frame the large window openings - generating interest and animation along the street faces, and when viewed from afar.

The street level building base is subtly distinguished from the upper levels by its proportion of glass retail storefront. The upper floors feature rhythmic punched window openings, playing on historic proportions but using modern, highly efficient windows.

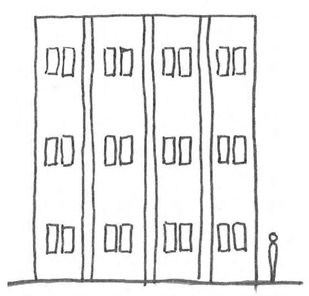

MGA
© MGA | 2014
DLR Group

MICHAEL GREEN ARCHITECTURE
63 E CORDOVA STREET
VANCOUVER BC
CANADA V6A 1K3

DLR Group
520 NICOLLET MALL, SUITE 200
MINNEAPOLIS MN
USA 55402

DATE	REVISION	DESCRIPTION
2015 02 27		ISSUED FOR LAND-USE APP.
2015 01 12		REISSUED FOR HPC CoA
2015 01 06		REISSUED FOR PDR
2014 12 24		ISSUED FOR DD
2014 12 15		ISSUED FOR HPC CoA
2014 12 05		ISSUED FOR PRICING ADDEN.
2014 11 17		ISSUED FOR PDR
2014 11 03		ISSUED FOR PRICING
2014 10 27		ISSUED FOR HPC/PLANNING
2014 10 15		ISSUED FOR SCHEMATIC DESIGN

MINNEAPOLIS T3
MINNEAPOLIS, MN
2014 015

A006
BUILDING TYPOLOGIES
WINDOW TYPES

1 **OVERALL BUILDING - AERIAL VIEW**

MGA
© MGA | 2014
DLR Group

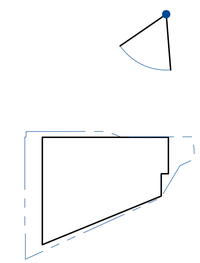

MICHAEL GREEN ARCHITECTURE
63 E CORDOVA STREET
VANCOUVER BC
CANADA V6A 1K3

DLR Group
520 NICOLLET MALL, SUITE 200
MINNEAPOLIS MN
USA 55402

DATE	REVISION	DESCRIPTION
2015 02 27		ISSUED FOR LAND-USE APP.
2015 01 12		REISSUED FOR HPC CoA
2015 01 06		REISSUED FOR PDR
2014 12 24		ISSUED FOR DD
2014 12 15		ISSUED FOR HPC CoA
2014 12 05		ISSUED FOR PRICING ADDEN.
2014 11 17		ISSUED FOR PDR
2014 11 03		ISSUED FOR PRICING
2014 10 27		ISSUED FOR HPC/PLANNING
2014 10 15		ISSUED FOR SCHEMATIC DESIGN

MINNEAPOLIS T3
MINNEAPOLIS, MN
2014 015

A010
RENDERINGS

1 **OVERALL BUILDING - NORTHEAST CORNER**

MGA
© MGA | 2014
DLR Group

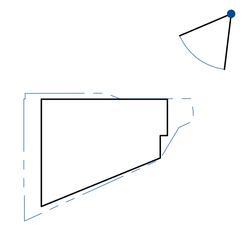

MICHAEL GREEN ARCHITECTURE
63 E CORDOVA STREET
VANCOUVER BC
CANADA V6A 1K3

DLR Group
520 NICOLLET MALL, SUITE 200
MINNEAPOLIS MN
USA 55402

DATE	REVISION	DESCRIPTION
2015 02 27		ISSUED FOR LAND-USE APP.
2015 01 12		REISSUED FOR HPC CoA
2015 01 06		REISSUED FOR PDR
2014 12 24		ISSUED FOR DD
2014 12 15		ISSUED FOR HPC CoA
2014 12 05		ISSUED FOR PRICING ADDEN.
2014 11 17		ISSUED FOR PDR
2014 11 03		ISSUED FOR PRICING
2014 10 27		ISSUED FOR HPC/PLANNING
2014 10 15		ISSUED FOR SCHEMATIC DESIGN

MINNEAPOLIS T3
MINNEAPOLIS, MN
2014 015

A011
RENDERINGS

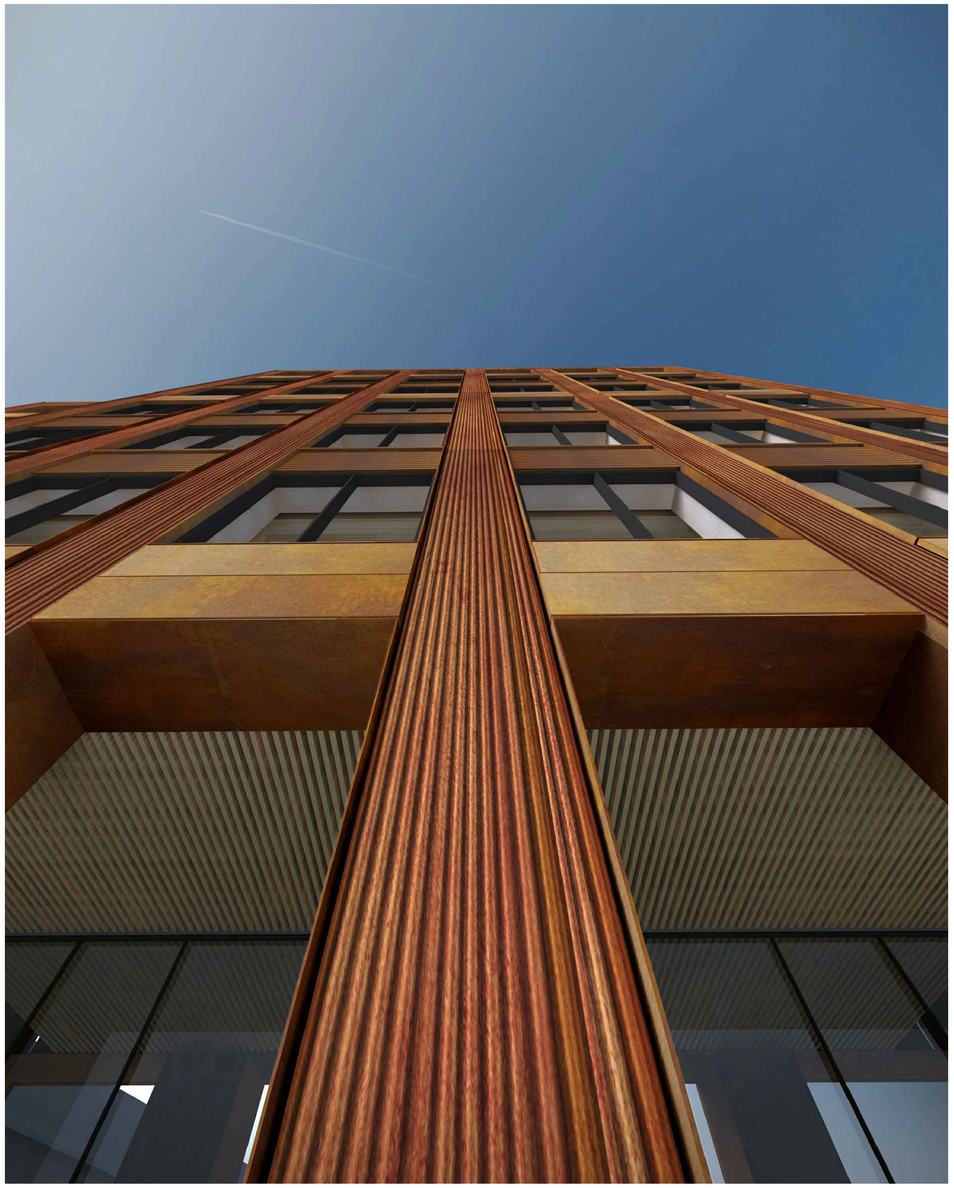

1 **EXTERIOR FACADE LOOKING UP**

MGA
© MGA | 2014
DLR Group

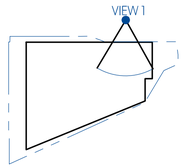

MICHAEL GREEN ARCHITECTURE
63 E CORDOVA STREET
VANCOUVER BC
CANADA V6A 1K3

DLR Group
520 NICOLLET MALL, SUITE 200
MINNEAPOLIS MN
USA 55402

DATE	REVISION	DESCRIPTION
2015 02 27		ISSUED FOR LAND-USE APP.
2015 01 12		REISSUED FOR HPC CoA
2015 01 06		REISSUED FOR PDR
2014 12 24		ISSUED FOR DD
2014 12 15		ISSUED FOR HPC CoA
2014 12 05		ISSUED FOR PRICING ADDEN.
2014 11 17		ISSUED FOR PDR
2014 11 03		ISSUED FOR PRICING
2014 10 27		ISSUED FOR HPC/PLANNING
2014 10 15		ISSUED FOR SCHEMATIC DESIGN

MINNEAPOLIS T3
MINNEAPOLIS, MN
2014 015

A012
RENDERINGS

1 **NORTH EAST CORNER - DAYTIME**

2 **NORTH EAST CORNER AT NIGHT**

MGA
© MGA | 2014
DLR Group

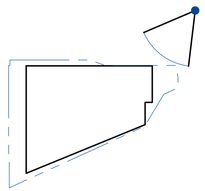

MICHAEL GREEN ARCHITECTURE
63 E CORDOVA STREET
VANCOUVER BC
CANADA V6A 1K3

DLR Group
520 NICOLLET MALL, SUITE 200
MINNEAPOLIS MN
USA 55402

DATE	REVISION	DESCRIPTION
2015 02 27		ISSUED FOR LAND-USE APP.
2015 01 12		REISSUED FOR HPC CoA
2015 01 06		REISSUED FOR PDR
2014 12 24		ISSUED FOR DD
2014 12 15		ISSUED FOR HPC CoA
2014 12 05		ISSUED FOR PRICING ADDEN.
2014 11 17		ISSUED FOR PDR
2014 11 03		ISSUED FOR PRICING
2014 10 27		ISSUED FOR HPC/PLANNING
2014 10 15		ISSUED FOR SCHEMATIC DESIGN

MINNEAPOLIS T3
MINNEAPOLIS, MN
2014 015

A013
RENDERINGS

MGA
© MGA | 2014
DLR Group

1 **NORTH SIDE MAIN ENTRY**

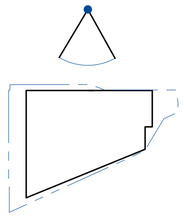

MICHAEL GREEN ARCHITECTURE
63 E CORDOVA STREET
VANCOUVER BC
CANADA V6A 1K3

DLR Group
520 NICOLLET MALL, SUITE 200
MINNEAPOLIS MN
USA 55402

DATE	REVISION	DESCRIPTION
2015 02 27		ISSUED FOR LAND-USE APP.
2015 01 12		REISSUED FOR HPC CoA
2015 01 06		REISSUED FOR PDR
2014 12 24		ISSUED FOR DD
2014 12 15		ISSUED FOR HPC CoA
2014 12 05		ISSUED FOR PRICING ADDEN.
2014 11 17		ISSUED FOR PDR
2014 11 03		ISSUED FOR PRICING
2014 10 27		ISSUED FOR HPC/PLANNING
2014 10 15		ISSUED FOR SCHEMATIC DESIGN

MINNEAPOLIS T3
MINNEAPOLIS, MN
2014 015

A014
RENDERINGS

1 **CONTEXT VIEW FROM 1-94W**

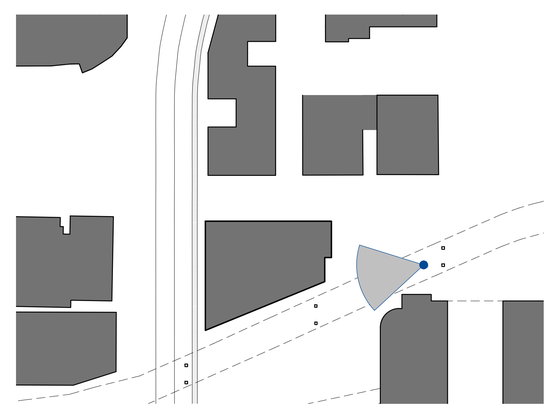

MGA
© MGA | 2014
DLR Group

MICHAEL GREEN ARCHITECTURE
63 E CORDOVA STREET
VANCOUVER BC
CANADA V6A 1K3

DLR Group
520 NICOLLET MALL, SUITE 200
MINNEAPOLIS MN
USA 55402

DATE	REVISION	DESCRIPTION
2015 02 27		ISSUED FOR LAND-USE APP.
2015 01 12		REISSUED FOR HPC CoA
2015 01 06		REISSUED FOR PDR
2014 12 24		ISSUED FOR DD
2014 12 15		ISSUED FOR HPC CoA
2014 12 05		ISSUED FOR PRICING ADDEN.
2014 11 17		ISSUED FOR PDR
2014 11 03		ISSUED FOR PRICING
2014 10 27		ISSUED FOR HPC/PLANNING
2014 10 15		ISSUED FOR SCHEMATIC DESIGN

MINNEAPOLIS T3
MINNEAPOLIS, MN
2014 015

A041
CONTEXT RENDERINGS

1 **CONTEXT VIEW FROM DOCK STREET**

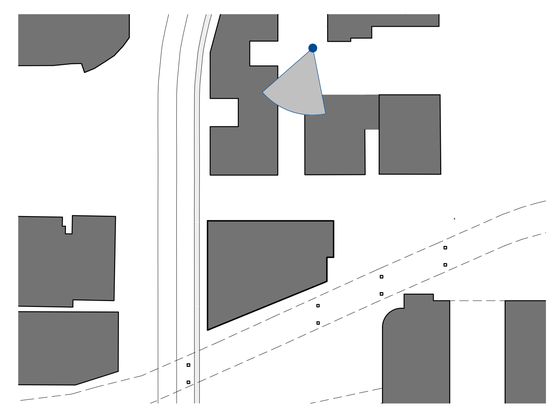

MGA
© MGA | 2014
DLR Group

MICHAEL GREEN ARCHITECTURE
63 E CORDOVA STREET
VANCOUVER BC
CANADA V6A 1K3

DLR Group
520 NICOLLET MALL, SUITE 200
MINNEAPOLIS MN
USA 55402

DATE	REVISION	DESCRIPTION
2015 02 27		ISSUED FOR LAND-USE APP.
2015 01 12		REISSUED FOR HPC CoA
2015 01 06		REISSUED FOR PDR
2014 12 24		ISSUED FOR DD
2014 12 15		ISSUED FOR HPC CoA
2014 12 05		ISSUED FOR PRICING ADDEN.
2014 11 17		ISSUED FOR PDR
2014 11 03		ISSUED FOR PRICING
2014 10 27		ISSUED FOR HPC/PLANNING
2014 10 15		ISSUED FOR SCHEMATIC DESIGN

MINNEAPOLIS T3
MINNEAPOLIS, MN
2014 015

A042
CONTEXT RENDERINGS

1 **CONTEXT VIEW FROM ACROSS RAILROAD 1**

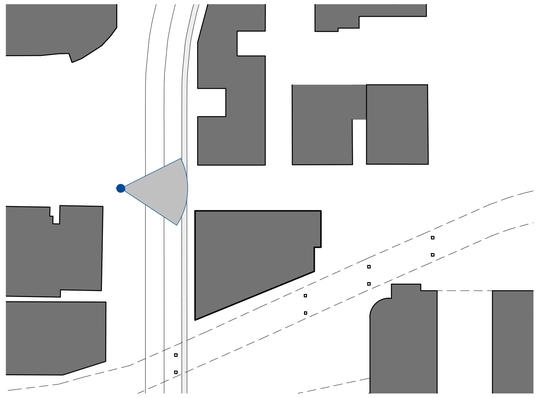

MGA
© MGA | 2014
DLR Group

MICHAEL GREEN ARCHITECTURE
63 E CORDOVA STREET
VANCOUVER BC
CANADA V6A 1K3

DLR Group
520 NICOLLET MALL, SUITE 200
MINNEAPOLIS MN
USA 55402

DATE	REVISION	DESCRIPTION
2015 02 27		ISSUED FOR LAND-USE APP.
2015 01 12		REISSUED FOR HPC CoA
2015 01 06		REISSUED FOR PDR
2014 12 24		ISSUED FOR DD
2014 12 15		ISSUED FOR HPC CoA
2014 12 05		ISSUED FOR PRICING ADDEN.
2014 11 17		ISSUED FOR PDR
2014 11 03		ISSUED FOR PRICING
2014 10 27		ISSUED FOR HPC/PLANNING
2014 10 15		ISSUED FOR SCHEMATIC DESIGN

MINNEAPOLIS T3
MINNEAPOLIS, MN
2014 015

A043
CONTEXT RENDERINGS

1 **CONTEXT VIEW FROM ACROSS RAILROAD 2**

MGA
© MGA | 2014
DLR Group

MICHAEL GREEN ARCHITECTURE
63 E CORDOVA STREET
VANCOUVER BC
CANADA V6A 1K3

DLR Group
520 NICOLLET MALL, SUITE 200
MINNEAPOLIS MN
USA 55402

DATE	REVISION	DESCRIPTION
2015 02 27		ISSUED FOR LAND-USE APP.
2015 01 12		REISSUED FOR HPC CoA
2015 01 06		REISSUED FOR PDR
2014 12 24		ISSUED FOR DD
2014 12 15		ISSUED FOR HPC CoA
2014 12 05		ISSUED FOR PRICING ADDEN.
2014 11 17		ISSUED FOR PDR
2014 11 03		ISSUED FOR PRICING
2014 10 27		ISSUED FOR HPC/PLANNING
2014 10 15		ISSUED FOR SCHEMATIC DESIGN

MINNEAPOLIS T3
MINNEAPOLIS, MN
2014 015

A044
CONTEXT RENDERINGS

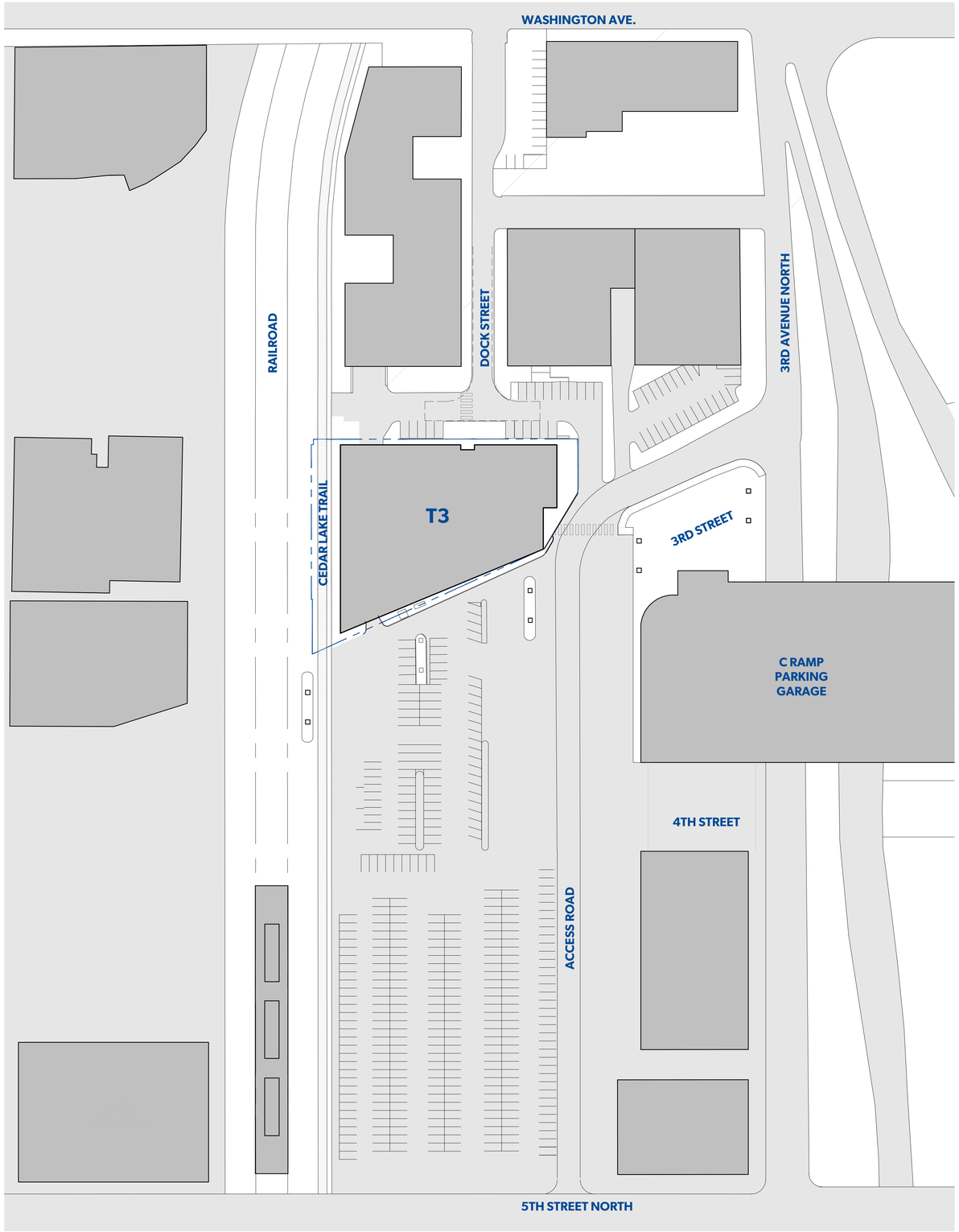

1 **AREA PLAN**
A050 1/60"=1'0"

MGA
DLR Group

© MGA | 2014

MICHAEL GREEN ARCHITECTURE
63 E CORDOVA STREET
VANCOUVER BC
CANADA V6A 1K3

DLR Group
520 NICOLLET MALL, SUITE 200
MINNEAPOLIS MN
USA 55402

DATE	REVISION	DESCRIPTION
2015 02 27		ISSUED FOR LAND-USE APP.
2015 01 12		REISSUED FOR HPC CoA
2015 01 06		REISSUED FOR PDR
2014 12 24		ISSUED FOR DD
2014 12 15		ISSUED FOR HPC CoA
2014 12 05		ISSUED FOR PRICING ADDEN.
2014 11 17		ISSUED FOR PDR
2014 11 03		ISSUED FOR PRICING
2014 10 27		ISSUED FOR HPC/PLANNING
2014 10 15		ISSUED FOR SCHEMATIC DESIGN

MINNEAPOLIS T3
MINNEAPOLIS, MN
2014 015

A050
AREA PLAN

1. UPLIGHTING AT BASE - TYPICAL

2. GRAVEL STRIP - TYPICAL

3. CAST IN PLACE CONCRETE

4. PLANTING BED WITH SEATING AREA

MGA
© MGA | 2014
DLR Group

MICHAEL GREEN ARCHITECTURE
63 E CORDOVA STREET
VANCOUVER BC
CANADA V6A 1K3

DLR Group
520 NICOLLET MALL, SUITE 200
MINNEAPOLIS MN
USA 55402

DATE	REVISION	DESCRIPTION
2015 02 27		ISSUED FOR LAND-USE APP.
2015 01 12		REISSUED FOR HPC CoA
2015 01 06		REISSUED FOR PDR
2014 12 24		ISSUED FOR DD
2014 12 15		ISSUED FOR HPC CoA
2014 12 05		ISSUED FOR PRICING ADDEN.
2014 11 17		ISSUED FOR PDR
2014 11 03		ISSUED FOR PRICING
2014 10 27		ISSUED FOR HPC/PLANNING
2014 10 15		ISSUED FOR SCHEMATIC DESIGN

MINNEAPOLIS T3
MINNEAPOLIS, MN
2014 015

A051
SITE PLAN

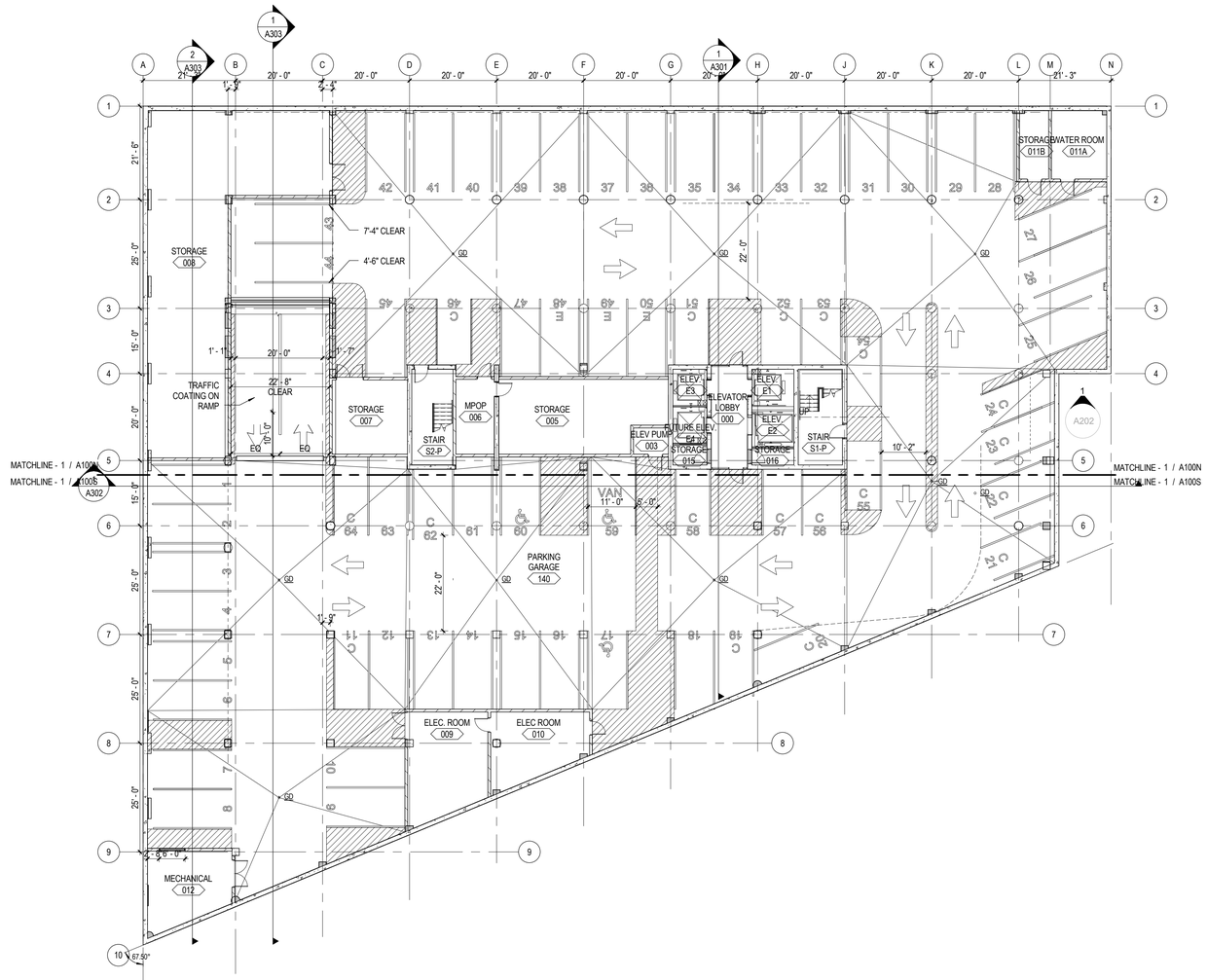

PLAN - PARKING LEVEL

A100 1/16" = 1'-0"

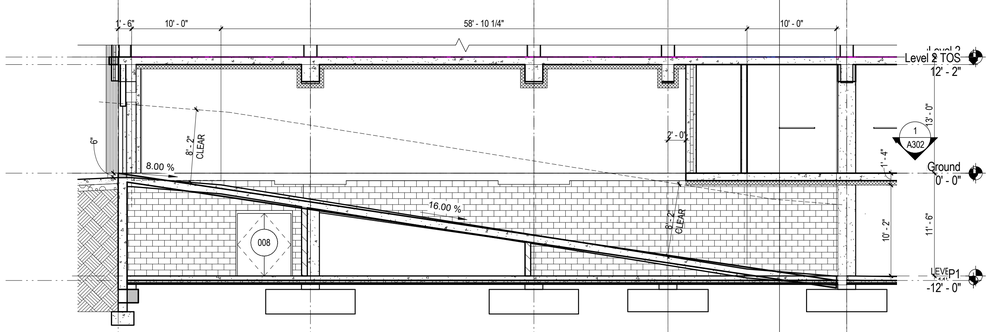

SECTION - GARAGE RAMP

3 A100 1/8" = 1'-0"

PARKING COUNT AT GARAGE LEVEL

90° ADA STALLS	2
90° ADA VAN STALLS	1
90° COMPACT STALLS (8'-0" x 15'-0")	12
90° COMPACT STALLS (8'-0" x 16'-0")	4
90° COMPACT STALLS (8'-0" x 18'-0")	2
90° ELECTRIC VEHICLE STALLS (9'X18')	3
90° STANDARD STALLS (9'X18')	40
GRAND TOTAL	64

MGA DLR Group

© MGA | 2015
© 2015, DLR Group Inc., A Minnesota Corporation. ALL RIGHTS RESERVED

MICHAEL GREEN ARCHITECTURE
57 E CORDOVA STREET
VANCOUVER BC
CANADA V6A 1K3

DLR Group Inc.
520 Nicollet Mall, Suite 200
MINNEAPOLIS, MN 55402
USA

DATE	REV	DESCRIPTION
2015 02 27		ISSUED FOR LAND-USE APP
2015 01 06		REISSUED FOR PDR
2014 10 15		ISSUED FOR SCHEMATIC DESIGN
2014 10 27		ISSUED FOR HPC/PLANNING
2014 11 03		ISSUED FOR PRICING
2014 11 17		ISSUED FOR PDR
2014 12 05		ISSUED FOR PRICING ADDEN.
2014 12 15		ISSUED FOR HPC CoA
2014 12 24		ISSUED FOR DD

MINNEAPOLIS T3
323 Washington Ave. N.
Minneapolis, MN
55401

40-14127-00

A100

PLAN - PARKING LEVEL

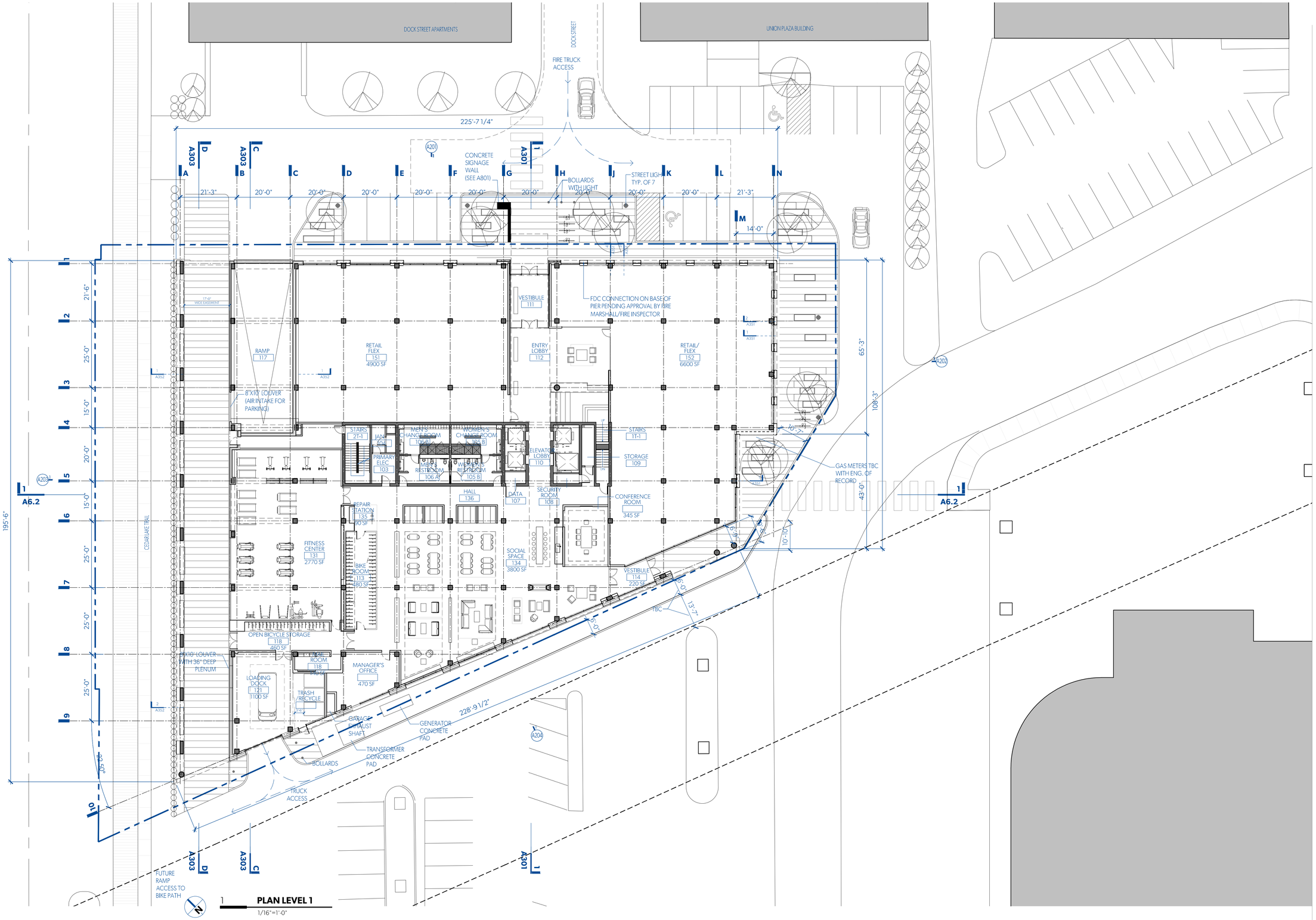

1 **PLAN LEVEL 1**
1/16"=1'-0"

MGA
© MGA | 2014
DLR Group

MICHAEL GREEN ARCHITECTURE
63 E CORDOVA STREET
VANCOUVER BC
CANADA V6A 1K3

DLR Group
520 NICOLLET MALL, SUITE 200
MINNEAPOLIS MN
USA 55402

DATE	REVISION	DESCRIPTION
2015 02 27		ISSUED FOR LAND-USE APP.
2015 01 12		REISSUED FOR HPC CoA
2015 01 06		REISSUED FOR PDR
2014 12 24		ISSUED FOR DD
2014 12 15		ISSUED FOR HPC CoA
2014 12 05		ISSUED FOR PRICING ADDEN.
2014 11 17		ISSUED FOR PDR
2014 11 03		ISSUED FOR PRICING
2014 10 27		ISSUED FOR HPC/PLANNING
2014 10 15		ISSUED FOR SCHEMATIC DESIGN

MINNEAPOLIS T3
MINNEAPOLIS, MN
2014 015

A101
PLAN - LEVEL 1

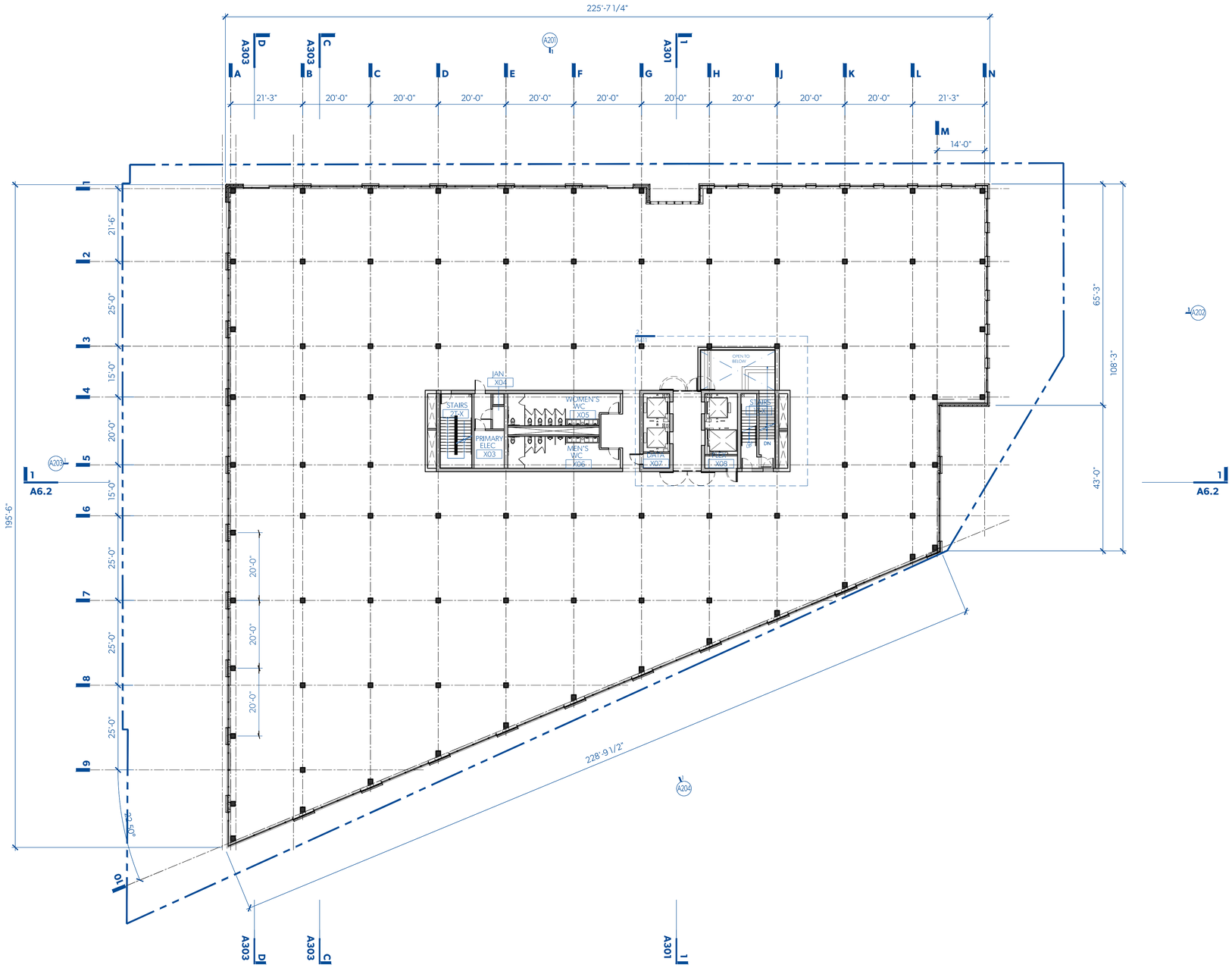

1 **PLAN LEVEL 2**
1/16"=1'-0"

MGA
© MGA | 2014
DLR Group

MICHAEL GREEN ARCHITECTURE
63 E CORDOVA STREET
VANCOUVER BC
CANADA V6A 1K3

DLR Group
520 NICOLLET MALL, SUITE 200
MINNEAPOLIS MN
USA 55402

DATE	REVISION	DESCRIPTION
2015 02 27		ISSUED FOR LAND-USE APP.
2015 01 12		REISSUED FOR HPC CoA
2015 01 06		REISSUED FOR PDR
2014 12 24		ISSUED FOR DD
2014 12 15		ISSUED FOR HPC CoA
2014 12 05		ISSUED FOR PRICING ADDEN.
2014 11 17		ISSUED FOR PDR
2014 11 03		ISSUED FOR PRICING
2014 10 27		ISSUED FOR HPC/PLANNING
2014 10 15		ISSUED FOR SCHEMATIC DESIGN

MINNEAPOLIS T3
MINNEAPOLIS, MN
2014 015

A102
PLAN - LEVEL 2

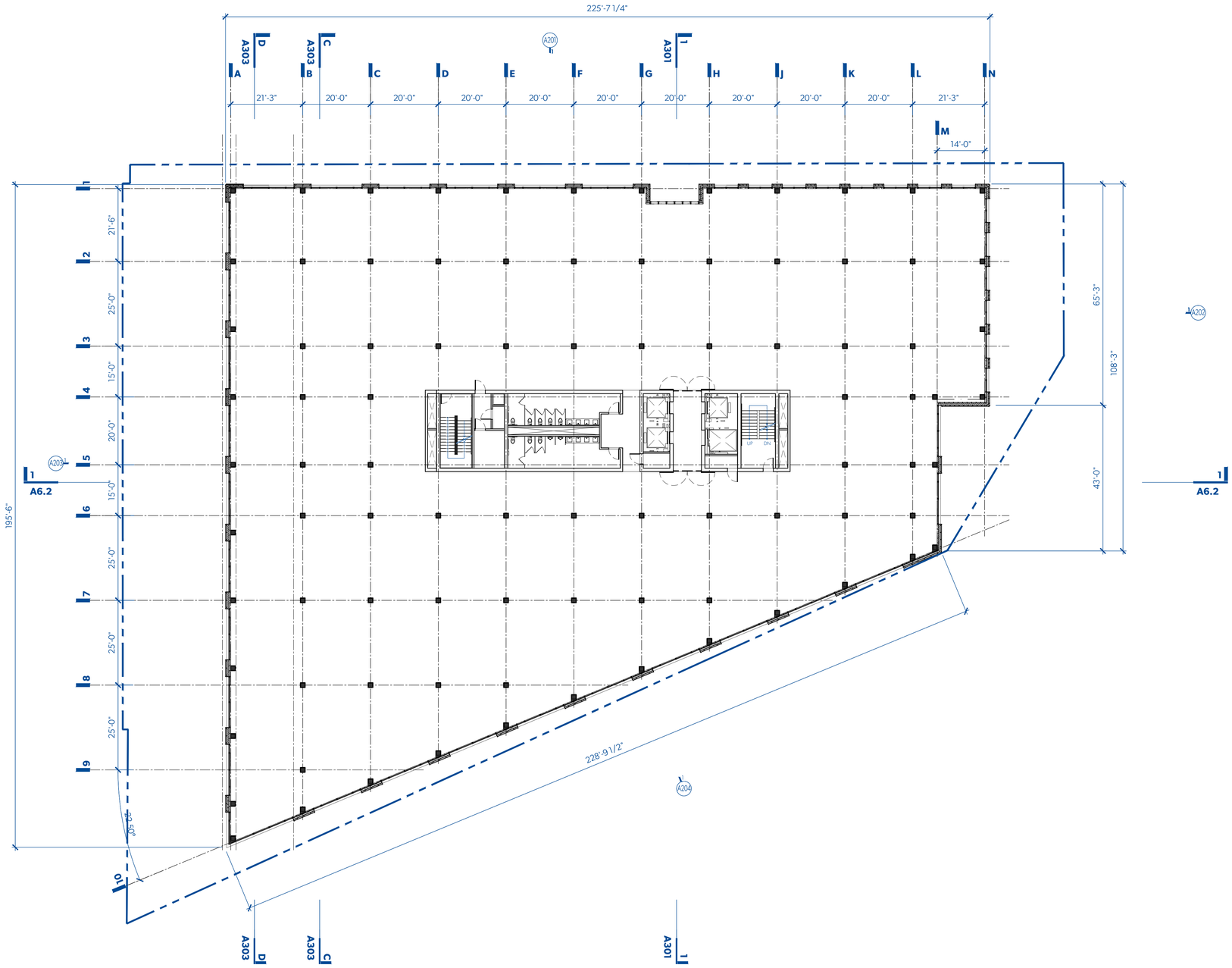

1 **PLAN - LEVELS 3-7**
1/16"=1'-0"

MGA
© MGA | 2014
DLR Group

MICHAEL GREEN ARCHITECTURE
63 E CORDOVA STREET
VANCOUVER BC
CANADA V6A 1K3

DLR Group
520 NICOLLET MALL, SUITE 200
MINNEAPOLIS MN
USA 55402

DATE	REVISION	DESCRIPTION
2015 02 27		ISSUED FOR LAND-USE APP.
2015 01 12		REISSUED FOR HPC CoA
2015 01 06		REISSUED FOR PDR
2014 12 24		ISSUED FOR DD
2014 12 15		ISSUED FOR HPC CoA
2014 12 05		ISSUED FOR PRICING ADDEN.
2014 11 17		ISSUED FOR PDR
2014 11 03		ISSUED FOR PRICING
2014 10 27		ISSUED FOR HPC/PLANNING
2014 10 15		ISSUED FOR SCHEMATIC DESIGN

MINNEAPOLIS T3
MINNEAPOLIS, MN
2014 015

A103
PLAN - LEVELS 3-7

1 **ROOF PLAN**
1/16"=1'-0"

1. UPLIGHTING AT BASE - TYPICAL

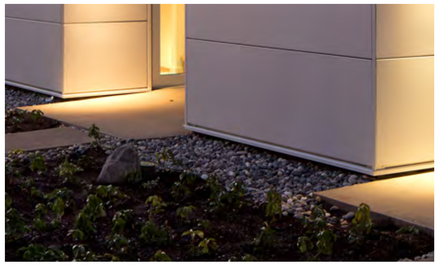
2. GRAVEL BALLAST

3. TRELLIS WITH SEATING AREA

MGA
© MGA | 2014
DLR Group

MICHAEL GREEN ARCHITECTURE
63 E CORDOVA STREET
VANCOUVER BC
CANADA V6A 1K3

DLR Group
520 NICOLLET MALL, SUITE 200
MINNEAPOLIS MN
USA 55402

DATE	REVISION	DESCRIPTION
2015 02 27		ISSUED FOR LAND-USE APP.
2015 01 12		REISSUED FOR HPC CoA
2015 01 06		REISSUED FOR PDR
2014 12 24		ISSUED FOR DD
2014 12 15		ISSUED FOR HPC CoA
2014 12 05		ISSUED FOR PRICING ADDEN.
2014 11 17		ISSUED FOR PDR
2014 11 03		ISSUED FOR PRICING
2014 10 27		ISSUED FOR HPC/PLANNING
2014 10 15		ISSUED FOR SCHEMATIC DESIGN

MINNEAPOLIS T3
MINNEAPOLIS, MN
2014 015

A108
PENTHOUSE + ROOF

1 FLAT PANEL CORTEN

2 CORRUGATED CORTEN

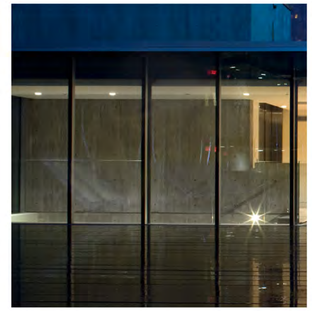

3 GLAZING

1 **NORTH ELEVATION**
3/32"=1'-0"

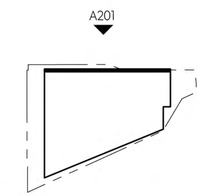

MGA
© MGA | 2014
DLR Group

MICHAEL GREEN ARCHITECTURE
63 E CORDOVA STREET
VANCOUVER BC
CANADA V6A 1K3

DLR Group
520 NICOLLET MALL, SUITE 200
MINNEAPOLIS MN
USA 55402

DATE	REVISION	DESCRIPTION
2015 02 27		ISSUED FOR LAND-USE APP.
2015 01 12		REISSUED FOR HPC CoA
2015 01 06		REISSUED FOR PDR
2014 12 24		ISSUED FOR DD
2014 12 15		ISSUED FOR HPC CoA
2014 12 05		ISSUED FOR PRICING ADDEN.
2014 11 17		ISSUED FOR PDR
2014 11 03		ISSUED FOR PRICING
2014 10 27		ISSUED FOR HPC/PLANNING
2014 10 15		ISSUED FOR SCHEMATIC DESIGN

MINNEAPOLIS T3
MINNEAPOLIS, MN
2014 015

A201
NORTH ELEVATION

1 FLAT PANEL CORTEN

2 CORRUGATED CORTEN

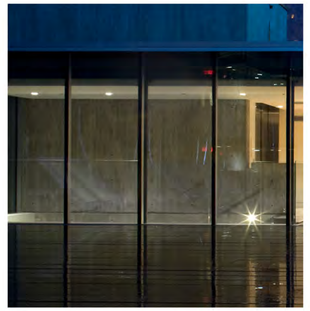

3 GLAZING

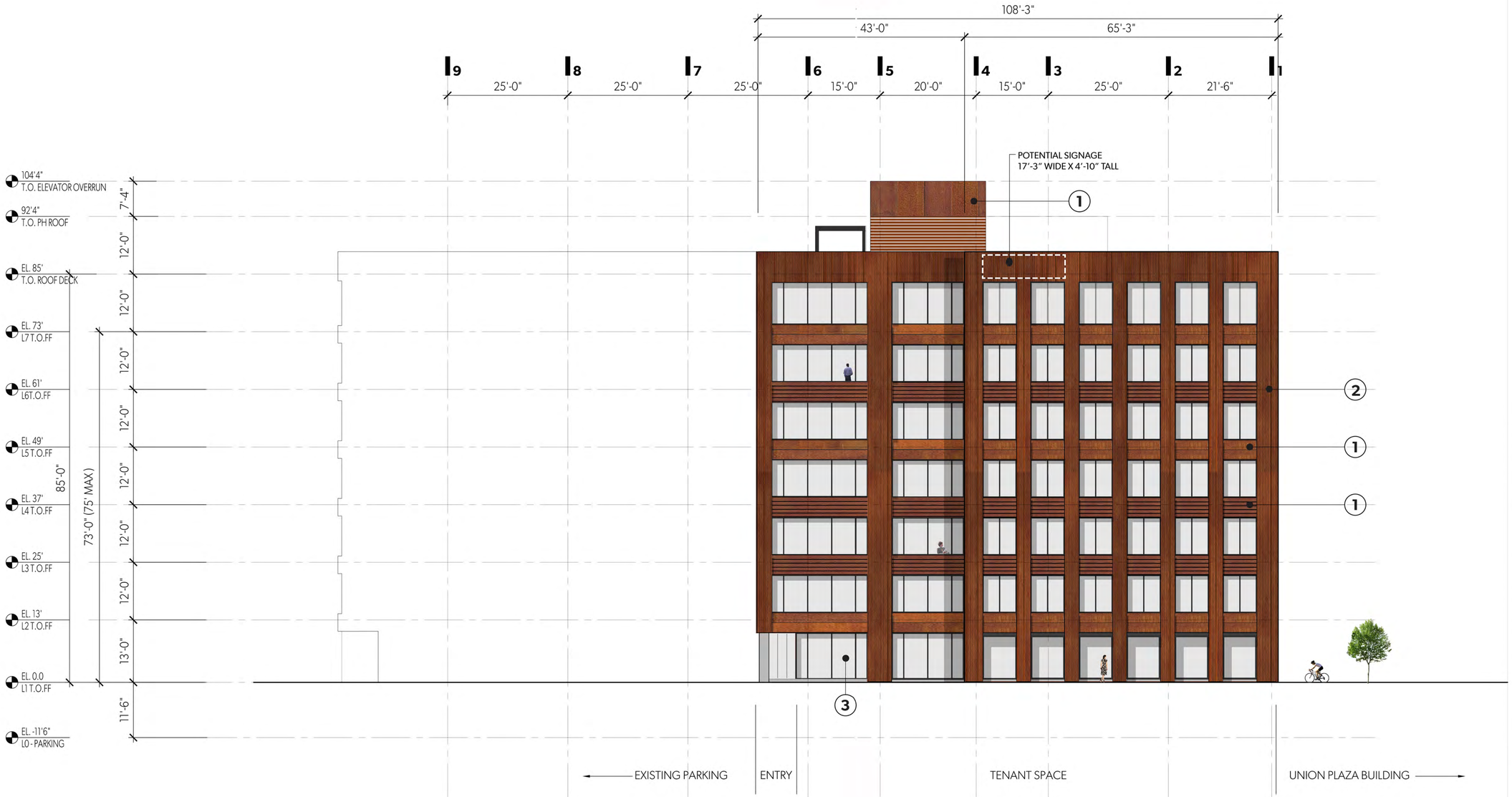

1 **EAST ELEVATION**
3/32"=1'-0"

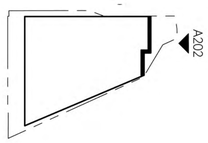

MICHAEL GREEN ARCHITECTURE
63 E CORDOVA STREET
VANCOUVER BC
CANADA V6A 1K3

DLR Group
520 NICOLLET MALL, SUITE 200
MINNEAPOLIS MN
USA 55402

DATE	REVISION	DESCRIPTION
2015 02 27		ISSUED FOR LAND-USE APP.
2015 01 12		REISSUED FOR HPC CoA
2015 01 06		REISSUED FOR PDR
2014 12 24		ISSUED FOR DD
2014 12 15		ISSUED FOR HPC CoA
2014 12 05		ISSUED FOR PRICING ADDEN.
2014 11 17		ISSUED FOR PDR
2014 11 03		ISSUED FOR PRICING
2014 10 27		ISSUED FOR HPC/PLANNING
2014 10 15		ISSUED FOR SCHEMATIC DESIGN

MINNEAPOLIS T3
MINNEAPOLIS, MN
2014 015

A202
EAST ELEVATION

1 FLAT PANEL CORTEN

2 CORRUGATED CORTEN

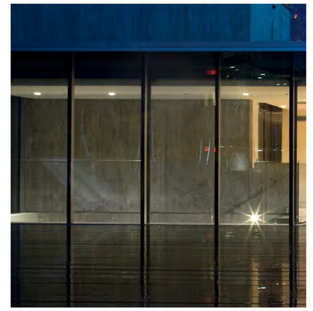

3 GLAZING

4 ARCHITECTURAL CONCRETE

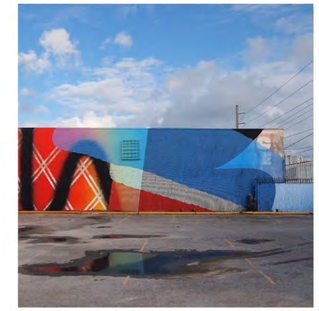

5 PUBLIC ART - WALL MURAL

1 **WEST ELEVATION**
3/32"=1'-0"

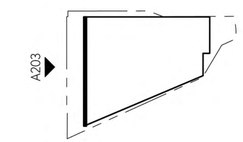

MICHAEL GREEN ARCHITECTURE
63 E CORDOVA STREET
VANCOUVER BC
CANADA V6A 1K3

DLR Group
520 NICOLLET MALL, SUITE 200
MINNEAPOLIS MN
USA 55402

DATE	REVISION	DESCRIPTION
2015 02 27		ISSUED FOR LAND-USE APP.
2015 01 12		REISSUED FOR HPC CoA
2015 01 06		REISSUED FOR PDR
2014 12 24		ISSUED FOR DD
2014 12 15		ISSUED FOR HPC CoA
2014 12 05		ISSUED FOR PRICING ADDEN.
2014 11 17		ISSUED FOR PDR
2014 11 03		ISSUED FOR PRICING
2014 10 27		ISSUED FOR HPC/PLANNING
2014 10 15		ISSUED FOR SCHEMATIC DESIGN

MINNEAPOLIS T3
MINNEAPOLIS, MN
2014 015

A203
WEST ELEVATION

1 FLAT PANEL CORTEN

2 CORRUGATED CORTEN

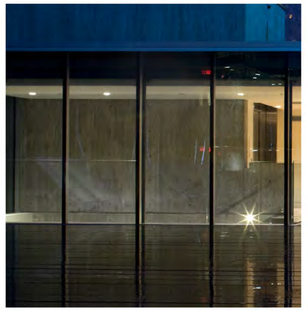

3 GLAZING

4 ARCHITECTURAL CONCRETE

1 **SOUTH ELEVATION**
3/32"=1'-0"

MGA
© MGA | 2014
DLR Group

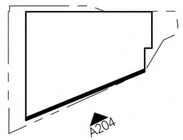

MICHAEL GREEN ARCHITECTURE
63 E CORDOVA STREET
VANCOUVER BC
CANADA V6A 1K3

DLR Group
520 NICOLLET MALL, SUITE 200
MINNEAPOLIS MN
USA 55402

DATE	REVISION	DESCRIPTION
2015 02 27		ISSUED FOR LAND-USE APP.
2015 01 12		REISSUED FOR HPC CoA
2015 01 06		REISSUED FOR PDR
2014 12 24		ISSUED FOR DD
2014 12 15		ISSUED FOR HPC CoA
2014 12 05		ISSUED FOR PRICING ADDEN.
2014 11 17		ISSUED FOR PDR
2014 11 03		ISSUED FOR PRICING
2014 10 27		ISSUED FOR HPC/PLANNING
2014 10 15		ISSUED FOR SCHEMATIC DESIGN

MINNEAPOLIS T3
MINNEAPOLIS, MN
2014 015

A204
SOUTH ELEVATION

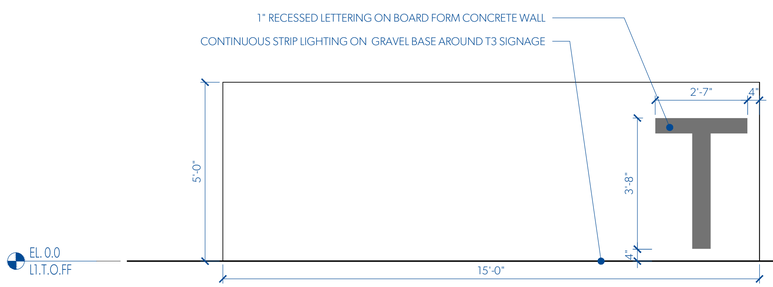

2 **NORTH ENTRANCE SIGNAGE - EAST ELEVATION**
1/2"=1'-0"

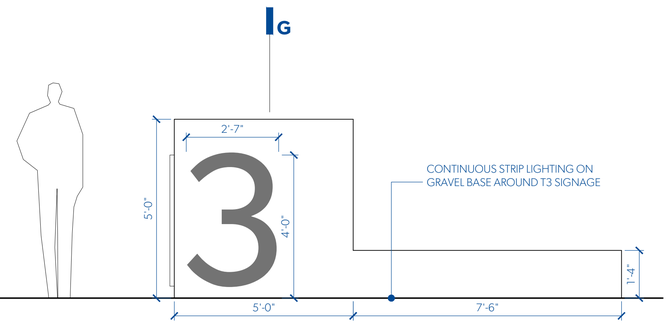

3 **NORTH ENTRANCE SIGNAGE - NORTH ELEVATION**
1/2"=1'-0"

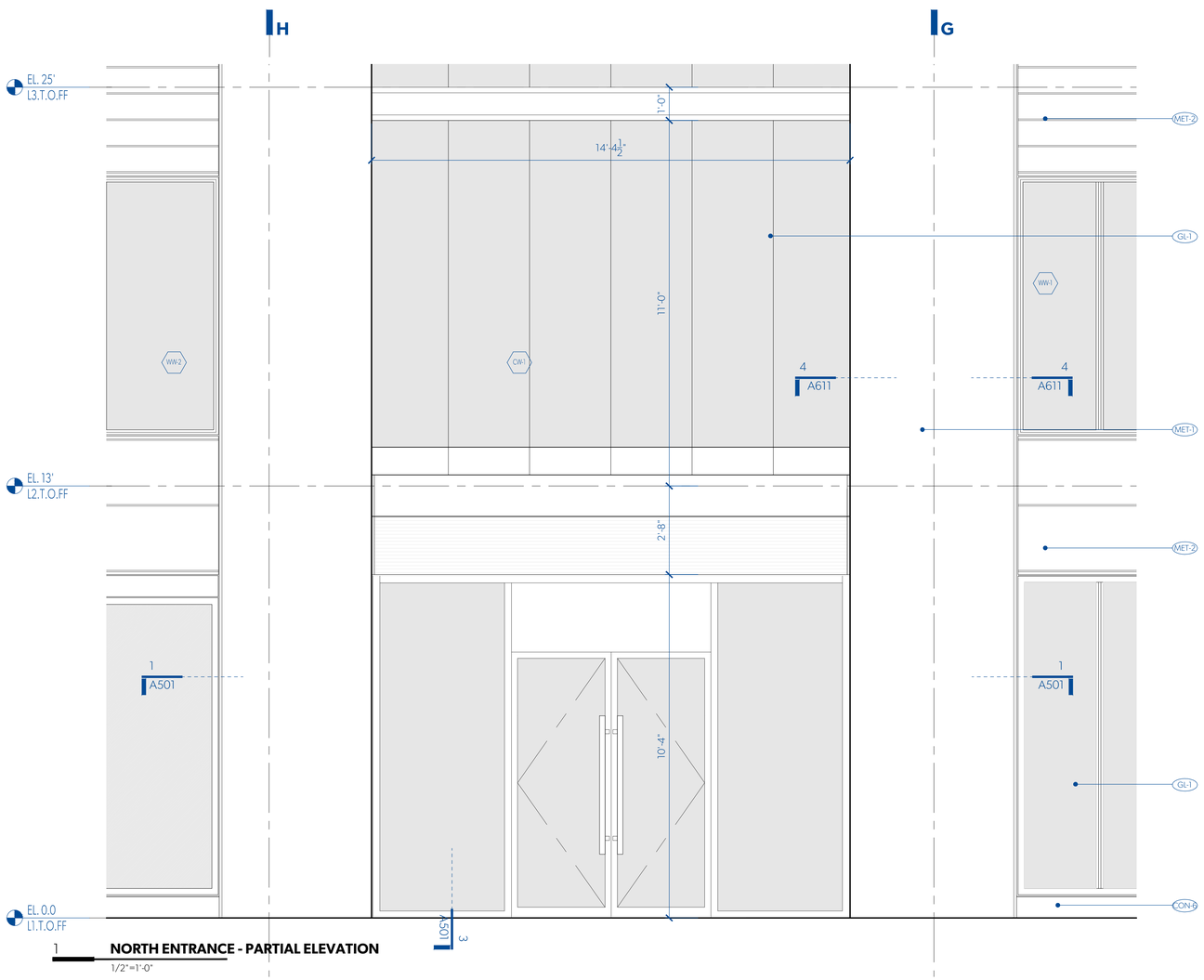

1 **NORTH ENTRANCE - PARTIAL ELEVATION**
1/2"=1'-0"

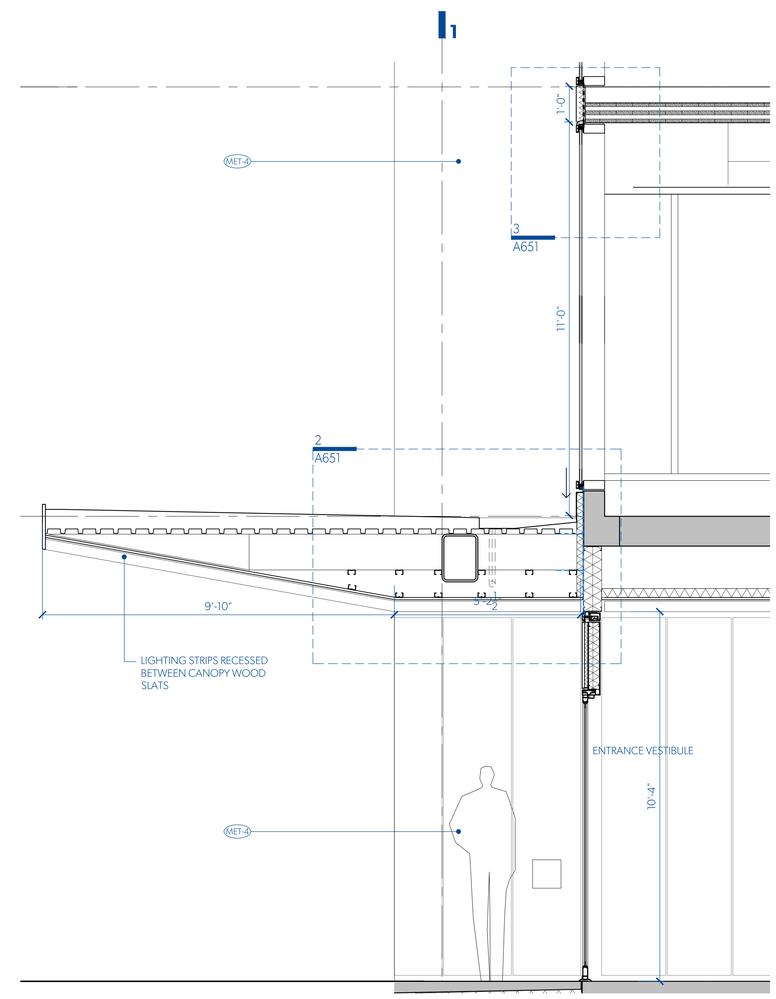

5 **NORTH ENTRANCE - PARTIAL SECTION**
1/2"=1'-0"

MGA
DLR Group
© MGA | 2014

MICHAEL GREEN ARCHITECTURE
63 E CORDOVA STREET
VANCOUVER BC
CANADA V6A 1K3

DLR Group
520 NICOLLET MALL, SUITE 200
MINNEAPOLIS MN
USA 55402

DATE	REVISION	DESCRIPTION
2015 02 27		ISSUED FOR LAND-USE APP.
2015 01 12		REISSUED FOR HPC CoA
2015 01 06		REISSUED FOR PDR
2014 12 24		ISSUED FOR DD
2014 12 15		ISSUED FOR HPC CoA
2014 12 05		ISSUED FOR PRICING ADDEN.
2014 11 17		ISSUED FOR PDR
2014 11 03		ISSUED FOR PRICING
2014 10 27		ISSUED FOR HPC/PLANNING
2014 10 15		ISSUED FOR SCHEMATIC DESIGN

MINNEAPOLIS T3
MINNEAPOLIS, MN
2014 015

A801
EXTERIOR DETAILS

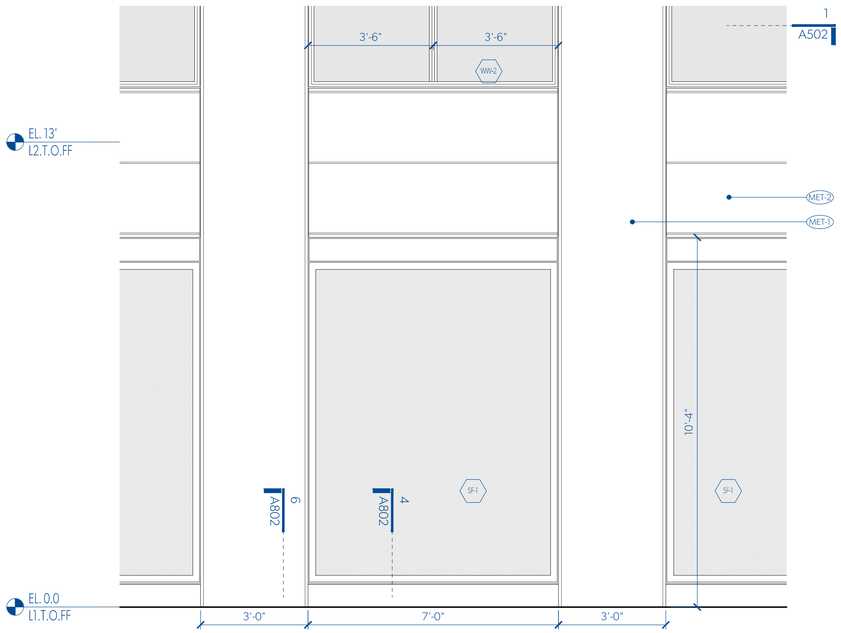

1 **ENLARGED PARTIAL ELEVATION - VERTICAL WINDOWS**

1/2"=1'-0"

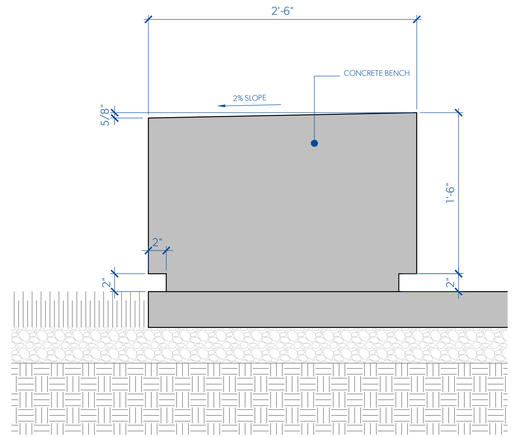

5 **CONCRETE BENCH DETAIL**

1-1/2"=1'-0"

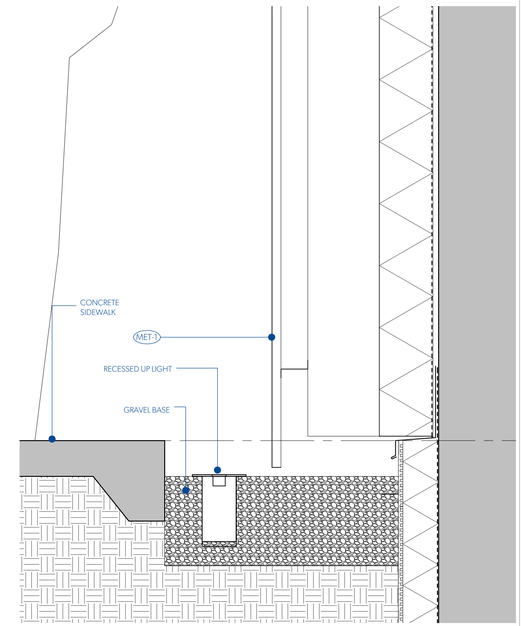

6 **GRAVEL AT PIER BASE - DETAIL**

1-1/2"=1'-0"

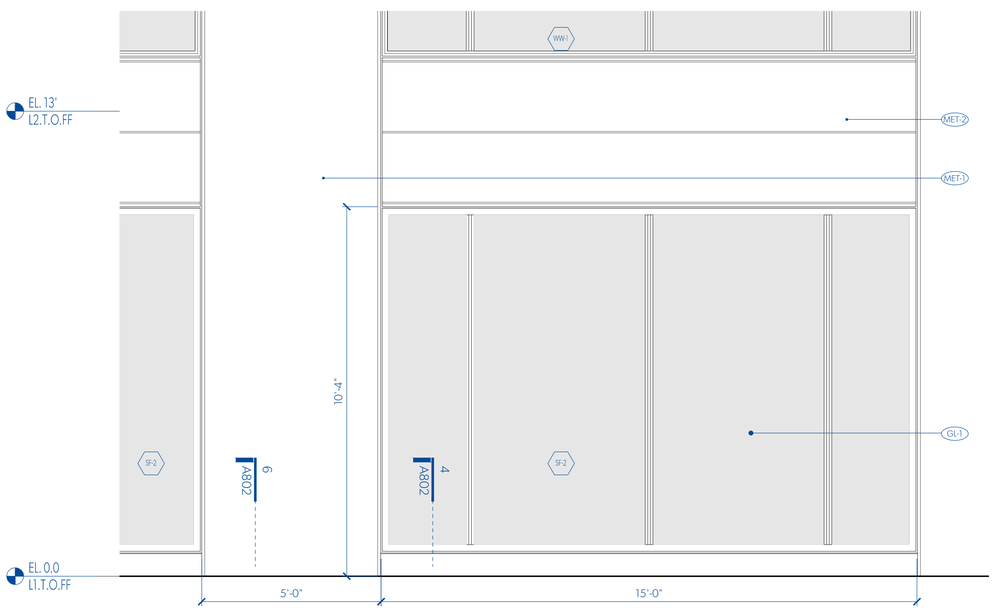

2 **ENLARGED PARTIAL ELEVATION - HORIZONTAL WINDOWS**

1/2"=1'-0"

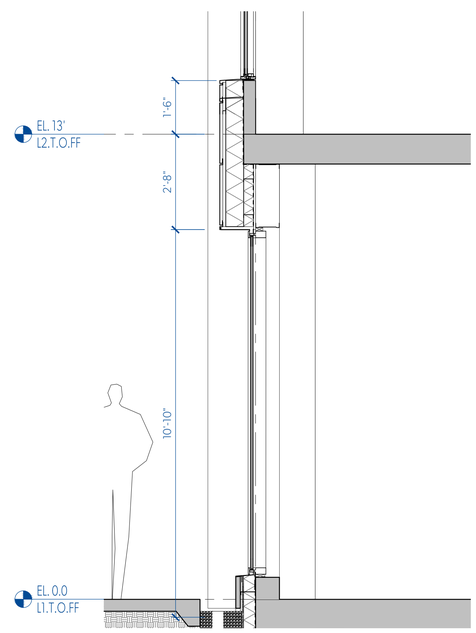

3 **HORIZONTAL WINDOWS - SECTION**

1/2"=1'-0"

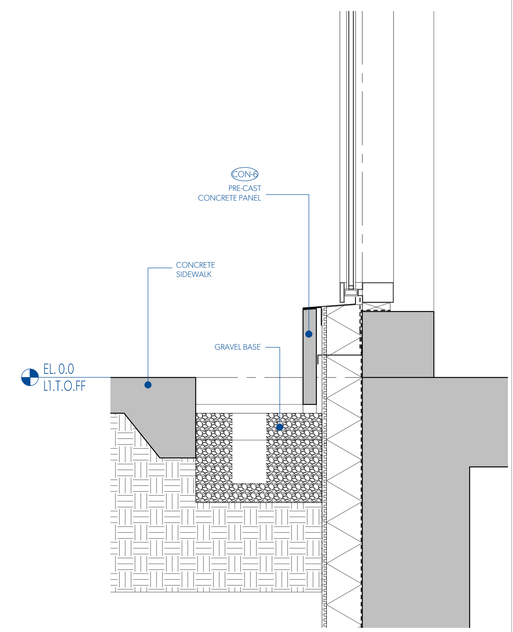

4 **GRAVEL AT BASE - DETAIL**

1-1/2"=1'-0"

MGA
© MGA | 2014
DLR Group

MICHAEL GREEN ARCHITECTURE
63 E CORDOVA STREET
VANCOUVER BC
CANADA V6A 1K3

DLR Group
520 NICOLLET MALL, SUITE 200
MINNEAPOLIS MN
USA 55402

DATE	REVISION	DESCRIPTION
2015 02 27		ISSUED FOR LAND-USE APP.
2015 01 12		REISSUED FOR HPC CoA
2015 01 06		REISSUED FOR PDR
2014 12 24		ISSUED FOR DD
2014 12 15		ISSUED FOR HPC CoA
2014 12 05		ISSUED FOR PRICING ADDEN.
2014 11 17		ISSUED FOR PDR
2014 11 03		ISSUED FOR PRICING
2014 10 27		ISSUED FOR HPC/PLANNING
2014 10 15		ISSUED FOR SCHEMATIC DESIGN

MINNEAPOLIS T3
MINNEAPOLIS, MN
2014 015

A802
EXTERIOR DETAILS

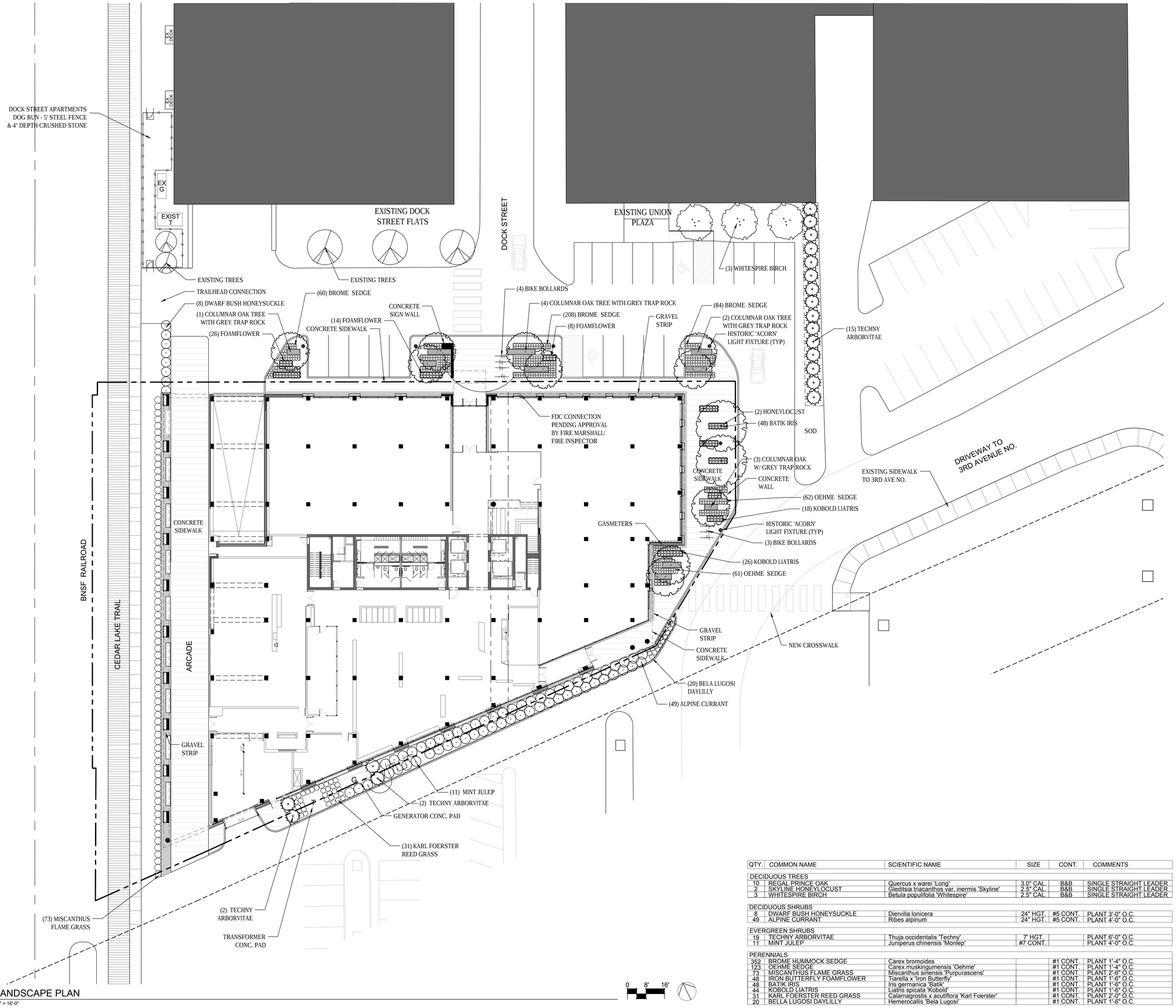

1 LANDSCAPE PLAN
1" = 16'-0"

0 8' 16'

QTY.	COMMON NAME	SCIENTIFIC NAME	SIZE	CONT.	COMMENTS
DECIDUOUS TREES					
10	REGAL PRINCE OAK	Quercus x warei 'Long'	3.0" CAL.	B&B	SINGLE STRAIGHT LEADER
2	SKYLINE HONEYLOCUST	Gleditsia triacanthos var. inermis 'Skyline'	2.5" CAL.	B&B	SINGLE STRAIGHT LEADER
3	WHITESPIRE BIRCH	Betula populifolia 'Whitespire'	2.5" CAL.	B&B	SINGLE STRAIGHT LEADER
DECIDUOUS SHRUBS					
8	DWARF BUSH HONEYSUCKLE	Diervilla lonicera	24" HGT.	#5 CONT.	PLANT 3'-0" O.C.
49	ALPINE CURRANT	Ribes alpinum	24" HGT.	#5 CONT.	PLANT 4'-0" O.C.
EVERGREEN SHRUBS					
19	TECHNY ARBORVITAE	Thuja occidentalis 'Techny'	7' HGT.		PLANT 6'-0" O.C.
11	MINT JULEP	Juniperus chinensis 'Monlep'	#7 CONT.		PLANT 4'-0" O.C.
PERENNIALS					
352	BROME HUMMOCK SEDGE	Carex bromoides		#1 CONT.	PLANT 1'-4" O.C.
123	OEHME SEDGE	Carex muskingumensis 'Oehme'		#1 CONT.	PLANT 1'-4" O.C.
73	MISCANTHUS FLAME GRASS	Miscanthus sinensis 'Purpurascens'		#1 CONT.	PLANT 2'-6" O.C.
48	IRON BUTTERFLY FOAMFLOWER	Tiarella x 'Iron Butterfly'		#1 CONT.	PLANT 1'-6" O.C.
48	BATIK IRIS	Iris germanica 'Batik'		#1 CONT.	PLANT 1'-6" O.C.
44	KOBOLD LIATRIS	Liatris spicata 'Kobold'		#1 CONT.	PLANT 1'-6" O.C.
31	KARL FOERSTER REED GRASS	Calamagrostis x acutiflora 'Karl Foerster'		#1 CONT.	PLANT 2'-0" O.C.
20	BELLA LUGOSI DAYLILLY	Hemerocallis 'Bela Lugosi'		#1 CONT.	PLANT 1'-6" O.C.

MGA
DLR Group
DAMON FARBER ASSOCIATES

© MGA 2015
© 2015, DLR Group inc., A Minnesota Corporation - ALL RIGHTS RESERVED

MICHAEL GREEN ARCHITECTURE
57 E CORDOVA STREET
VANCOUVER BC
CANADA V6A 1K3

DLR Group Inc.
520 Nicollet Mall, Suite 200
MINNEAPOLIS, MN 55402
USA

DAMON FARBER ASSOCIATES
401 2nd Avenue North, Suite 410
MINNEAPOLIS, MN 55401
USA

DATE	REV	DESCRIPTION
2015 02 27		LAND USE APPLICATION
2015 02 18		BID PACKAGE #1

MINNEAPOLIS T3
323 N. Washington Ave.
Minneapolis, MN 55401

40-14127-00

L1.0

LANDSCAPE PLAN

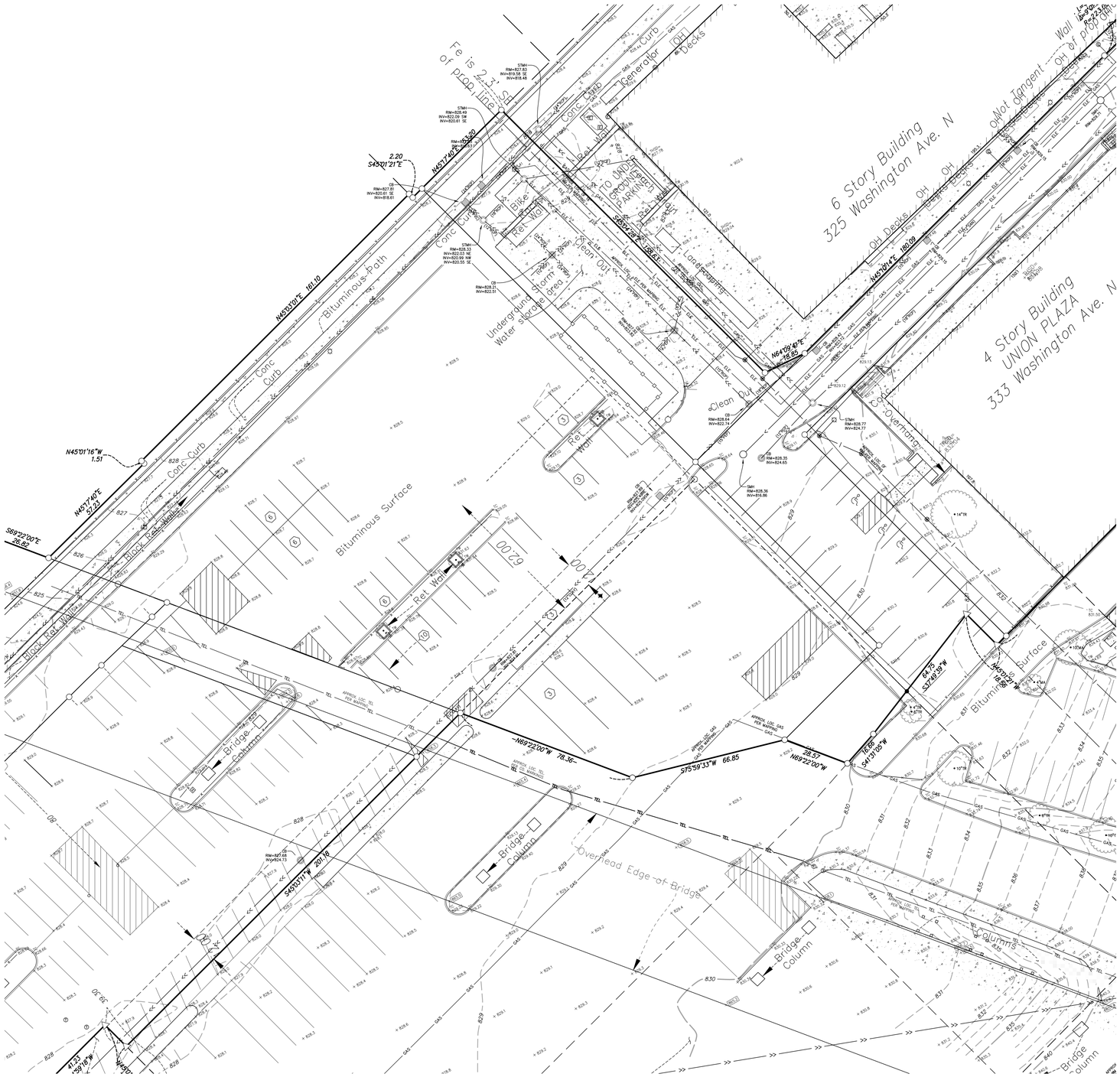

CALL BEFORE YOU DIG!

Gopher State One Call

TWIN CITY AREA: 651-454-0002
TOLL FREE: 1-800-252-1166

WARNING:

THE CONTRACTOR SHALL BE RESPONSIBLE FOR CALLING FOR LOCATIONS OF ALL EXISTING UTILITIES. THEY SHALL COOPERATE WITH ALL UTILITY COMPANIES IN MAINTAINING THEIR SERVICE AND / OR RELOCATION OF LINES.

THE CONTRACTOR SHALL CONTACT GOPHER STATE ONE CALL AT 651-454-0002 AT LEAST 48 HOURS IN ADVANCE FOR THE LOCATIONS OF ALL UNDERGROUND WIRES, CABLES, CONDUITS, PIPES, MANHOLES, VALVES OR OTHER BURIED STRUCTURES BEFORE DIGGING. THE CONTRACTOR SHALL REPAIR OR REPLACE THE ABOVE WHEN DAMAGED DURING CONSTRUCTION AT NO COST TO THE OWNER.

SURVEY LEGEND

AS	ASH		CATCH BASIN	>>	STORM SEWER
AP	APPLE		STORM MANHOLE	>	SANITARY SEWER
BA	BASSWOOD		SANITARY MANHOLE	I	WATERMAIN
BI	BIRCH		WATER MANHOLE	S	SANITARY SEWER SERVICE
BO	BOXELDER		HYDRANT	W	WATER SERVICE
BU	BUCKEYE		GATE VALVE		CULVERT
BS	BUSH		POWER POLE	CTV	UNDERGROUND CABLE TV
CA	CATULPA		LIGHT POLE	ELE	UNDERGROUND ELECTRIC
CE	CEDAR		YARD LIGHT	FO	UNDERGROUND FIBER OPTIC
CO	COTTONWOOD		GUY WIRE	GAS	UNDERGROUND GAS
DE	DEAD TREE		SIGN	TEL	UNDERGROUND TELEPHONE
EL	ELM	972.5	SPOT ELEVATION	UTIL	UNDERGROUND UTILITY
FR	MISC FRUIT		A/C UNIT	OH	OVERHEAD UTILITY
FI	FIR		CABLE TV PEDESTAL	TRFC	UNDERGROUND TRAFFIC
HA	HACKBERRY		ELECTRIC TRANSFORMER	DT	DRAIN TILE
HI	HICKORY		TELEPHONE PEDESTAL	FM	FORCE MAIN
IR	IRONWOOD		UTILITY PEDESTAL	X	CHAIN LINK FENCE
LO	LOCUST		ELECTRIC MANHOLE	O	POST FENCE
MA	MAPLE		GAS VALVE		WOOD FENCE
OA	OAK		TELEPHONE MANHOLE		TRAFFIC SIGNAL
PA	PALM		UTILITY MANHOLE		CONCRETE CURB
PI	PINE		ELECTRIC METER		CONCRETE
PO	POPLAR		GAS METER	872	CONTOUR
SP	SPRUCE		HAND HOLE		RAILROAD TRACKS
TR	TREE (GEN)		MONITORING WELL		CONIFEROUS TREE
WA	WALNUT		POST INDICATOR VALVE		DECIDUOUS TREE
WI	WILLOW		SOIL BORING		

THE EXISTING CONDITIONS PLAN IS BASED ON THE PARTIAL BOUNDARY AND TOPOGRAPHIC SURVEY PROVIDED BY LOUCKS ASSOCIATES DATED 04-24-2014.

NORTH

SCALE 0 20 40 IN FEET

BENCHMARKS

TOP NUT HYDRANT ALONG NORTHWEST SIDE OF 3RD AVE. N.,
ELEVATION = 841.21 (NGVD1929)

MINNEAPOLIS SURVEY MONUMENT:
CENTER OF 2ND AVE. N. AND 4TH ST. N.
ELEVATION = 848.98 (NGVD1929)

MGA
DLR Group
© MGA 2013
© 2015 DLR Group inc., A Wisconsin Corporation. ALL RIGHTS RESERVED

LOUCKS ASSOCIATES
Planning • Civil Engineering • Land Surveying
Landscape Architecture • Environmental

7200 Hemlock Lane - Suite 300
Maple Grove, MN 55369
Telephone: (763) 424-5505
www.LoucksAssociates.com
Loucks Project #14019F

I hereby certify that this plan, specification or report was prepared by me or under my direct supervision and that I am a duly Licensed Professional Engineer under the laws of the State of Minnesota.

Nicholas M. Mummel - PE

45861 — License No.
02/27/15 — Date

MICHAEL GREEN ARCHITECTURE
57 E CORDOVA STREET
VANCOUVER BC
CANADA V6A 1K3

DLR Group Inc.
520 Nicollet Mall, Suite 200
MINNEAPOLIS, MN 55402
USA

DATE	REV	DESCRIPTION
2015 03 05		CHECK SET
2015 02 27		LAND USE APPLICATION
2015 02 18		BID PACKAGE #1

MINNEAPOLIS T3
323 N. Washington Ave.
Minneapolis, MN 55401

40-14127-00

C1.1

EXISTING CONDITIONS PLAN

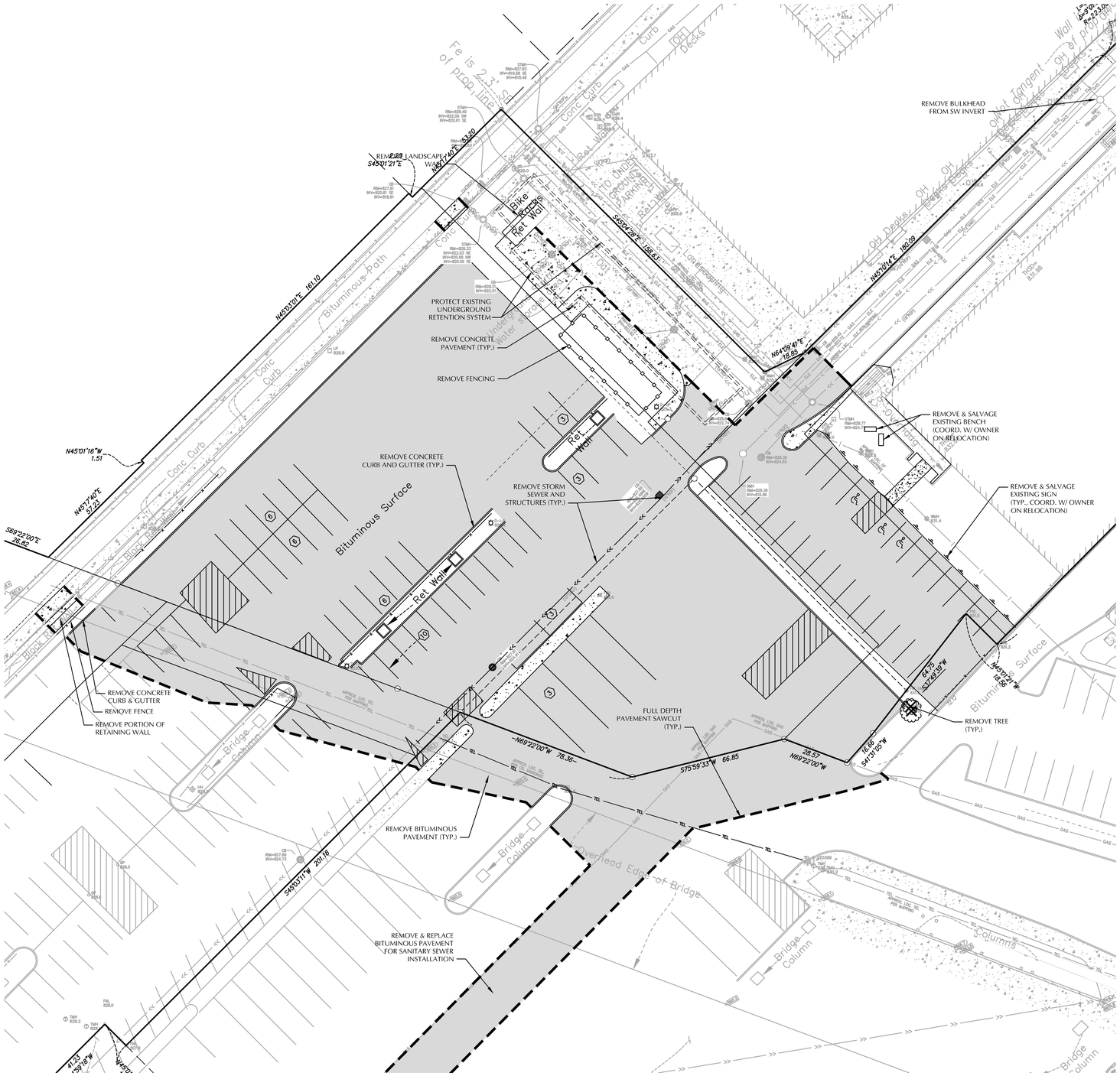

CALL BEFORE YOU DIG!

Gopher State One Call

TWIN CITY AREA: 651-454-0002
TOLL FREE: 1-800-252-1166

WARNING:

THE CONTRACTOR SHALL BE RESPONSIBLE FOR CALLING FOR LOCATIONS OF ALL EXISTING UTILITIES. THEY SHALL COOPERATE WITH ALL UTILITY COMPANIES IN MAINTAINING THEIR SERVICE AND / OR RELOCATION OF LINES.

THE CONTRACTOR SHALL CONTACT GOPHER STATE ONE CALL AT 651-454-0002 AT LEAST 48 HOURS IN ADVANCE FOR THE LOCATIONS OF ALL UNDERGROUND WIRES, CABLES, CONDUITS, PIPES, MANHOLES, VALVES OR OTHER BURIED STRUCTURES BEFORE DIGGING. THE CONTRACTOR SHALL REPAIR OR REPLACE THE ABOVE WHEN DAMAGED DURING CONSTRUCTION AT NO COST TO THE OWNER.

GENERAL NOTES

1. MINNESOTA STATE STATUTE REQUIRES NOTIFICATION PER "GOPHER STATE ONE CALL" PRIOR TO COMMENCING ANY GRADING, EXCAVATION OR UNDERGROUND WORK.

2. THE CONTRACTOR SHALL FIELD VERIFY LOCATIONS AND ELEVATIONS OF EXISTING UTILITIES AND TOPOGRAPHIC FEATURES PRIOR TO COMMENCEMENT OF CONSTRUCTION ACTIVITY. THE CONTRACTOR SHALL NOTIFY THE ENGINEER OF ANY DISCREPANCIES OR VARIATIONS FROM THE PLANS.

3. THE CONTRACTOR SHALL TAKE ALL PRECAUTIONS NECESSARY TO AVOID PROPERTY DAMAGE TO ADJACENT PROPERTIES DURING THE CONSTRUCTION PHASE OF THIS PROJECT. THE CONTRACTOR WILL BE HELD RESPONSIBLE FOR ANY DAMAGES TO ADJACENT PROPERTIES OCCURRING DURING THE CONSTRUCTION PHASE OF THIS PROJECT.

4. THE CONTRACTOR WILL BE RESPONSIBLE FOR PROVIDING AND MAINTAINING TRAFFIC CONTROL DEVICES SUCH AS BARRICADES, WARNING SIGNS, DIRECTIONAL SIGNS, FLAGMEN AND LIGHTS TO CONTROL THE MOVEMENT OF TRAFFIC WHERE NECESSARY. PLACEMENT OF THESE DEVICES SHALL BE APPROVED BY THE ENGINEER PRIOR TO PLACEMENT. TRAFFIC CONTROL DEVICES SHALL CONFORM TO THE APPROPRIATE MINNESOTA DEPARTMENT OF TRANSPORTATION STANDARDS.

5. IN ACCORDANCE WITH GENERALLY ACCEPTED CONSTRUCTION PRACTICES, THE CONTRACTOR WILL BE SOLELY AND COMPLETELY RESPONSIBLE FOR CONDITIONS ON THE JOB SITE, INCLUDING SAFETY OF ALL PERSONS AND PROPERTY DURING THE PERFORMANCE OF THE WORK. THIS REQUIREMENT WILL APPLY CONTINUOUSLY AND NOT BE LIMITED TO NORMAL WORKING HOURS.

6. THE DUTY OF THE ENGINEER OR THE DEVELOPER TO CONDUCT CONSTRUCTION REVIEW OF THE CONTRACTORS PERFORMANCE IS NOT INTENDED TO INCLUDE REVIEW OF THE ADEQUACY OF THE CONTRACTORS SAFETY MEASURES IN, OR NEAR THE CONSTRUCTION SITE.

7. BEFORE BEGINNING CONSTRUCTION THE CONTRACTOR SHALL INSTALL EROSION AND SEDIMENTATION CONTROL MEASURES IN ACCORDANCE WITH NPDES PERMIT REQUIREMENTS, BEST MANAGEMENT PRACTICES, STATE AND LOCAL REQUIREMENTS AND THE DETAILS SHOWN ON THE DETAIL SHEET(S) OF THE PROJECT PLANS.

8. ALL CONSTRUCTION PERMITS, APPLICATIONS AND FEES ARE THE RESPONSIBILITY OF THE CONTRACTOR.

9. ALL ENTRANCES AND CONNECTIONS TO CITY STREETS SHALL BE CONSTRUCTED PER THE REQUIREMENTS OF THE STATE AND LOCAL JURISDICTIONS. THE CONTRACTOR SHALL BE RESPONSIBLE FOR ALL PERMITS AND NOTIFICATIONS AS REQUIRED.

10. ALL STREET REPAIRS AND PATCHING SHALL BE PERFORMED PER THE REQUIREMENTS OF THE CITY. ALL TRAFFIC CONTROL SHALL BE PROVIDED BY THE CONTRACTOR AND SHALL BE ESTABLISHED PER THE REQUIREMENTS OF THE MINNESOTA MANUAL OF UNIFORM TRAFFIC CONTROL DEVICES (MUTCD) AND THE CITY. THIS SHALL INCLUDE ALL SIGNAGE, BARRICADES, FLASHERS AND FLAGGERS AS NEEDED. ALL PUBLIC STREETS SHALL BE OPEN TO TRAFFIC AT ALL TIMES.

11. ADJUST ALL EXISTING STRUCTURES, BOTH PUBLIC AND PRIVATE TO THE PROPOSED GRADES WHERE DISTURBED AND COMPLY WITH ALL REQUIREMENTS OF THE UTILITY OWNERS. STRUCTURES BEING RESET TO PAVED AREAS MUST MEET OWNERS REQUIREMENTS FOR TRAFFIC LOADING.

12. EXISTING TOPOGRAPHY PROVIDED BY LOUCKS ASSOCIATES, PARTIAL BOUNDARY AND TOPOGRAPHIC SURVEY DATED 04/24/14.

SITE DEMOLITION NOTES

1. CONTRACTOR SHALL REMOVE AND/OR RELOCATE EXISTING PRIVATE UTILITIES AS NECESSARY. CONTRACTOR TO COORDINATE ACTIVITIES WITH UTILITY COMPANIES.

2. CONTRACTOR SHALL PROTECT SURFACE AND SUBSURFACE FEATURES NOT NOTED FOR REMOVAL.

3. CONTRACTOR TO CLEAR AND GRUB EXISTING VEGETATION WITHIN CONSTRUCTION LIMITS, STRIP TOP SOIL, AND STOCKPILE ON-SITE. REFER TO GRADING PLAN AND SWPPP FOR SEDIMENT AND EROSION CONTROL REQUIREMENTS.

4. CLEAR AND GRUB AND REMOVE ALL TREES, VEGETATION AND SITE DEBRIS PRIOR TO GRADING. ALL REMOVED MATERIAL SHALL BE HAULED FROM THE SITE DAILY. ALL CLEARING AND GRUBBING AND REMOVALS SHALL BE PERFORMED PER THE CONTRACT SPECIFICATIONS. EROSION CONTROL MEASURES SHALL BE IMMEDIATELY ESTABLISHED UPON REMOVAL. SEE THE STORMWATER POLLUTION PREVENTION PLAN (SWPPP).

5. CONTRACTOR SHALL REMOVE ALL SITE SURFACE FEATURES WITHIN REMOVAL LIMITS UNLESS OTHERWISE NOTED.

SITE DEMOLITION LEGEND

- REMOVE CONCRETE PAVEMENT
- REMOVE BITUMINOUS PAVEMENT
- SAWCUT PAVEMENT
- REMOVE TREE

NOTE:

ALL ITEMS IN BOLD ARE TO BE REMOVED.

NORTH

0 20 40
SCALE IN FEET

BENCHMARKS

TOP NUT HYDRANT ALONG NORTHWEST SIDE OF 3RD AVE. N.,
ELEVATION = 841.21 (NGVD1929)

MINNEAPOLIS SURVEY MONUMENT:
CENTER OF 2ND AVE. N. AND 4TH ST. N.
ELEVATION = 848.98 (NGVD1929)

MGA ©MGA2015
DLR Group
© 2015 DLR Group Inc., A Wisconsin Corporation. ALL RIGHTS RESERVED

LOUCKS ASSOCIATES
Planning • Civil Engineering • Land Surveying
Landscape Architecture • Environmental
7200 Hemlock Lane - Suite 300
Maple Grove, MN 55369
Telephone: (763) 424-5505
www.LoucksAssociates.com
Loucks Project #14019F

I hereby certify that this plan, specification or report was prepared by me or under my direct supervision and that I am a duly licensed Professional Engineer under the laws of the State of Minnesota.

Nicholas M. Mummel - PE
45861 License No.
02/27/15 Date

MICHAEL GREEN ARCHITECTURE
57 E CORDOVA STREET
VANCOUVER BC
CANADA V6A 1K3

DLR Group Inc.
520 Nicollet Mall, Suite 200
MINNEAPOLIS, MN 55402
USA

DATE	REV	DESCRIPTION
2015 03 05		CHECK SET
2015 02 27		LAND USE APPLICATION
2015 02 18		BID PACKAGE #1

MINNEAPOLIS T3
323 N. Washington Ave.
Minneapolis, MN 55401

40-14127-00

C1.2

DEMOLITION PLAN

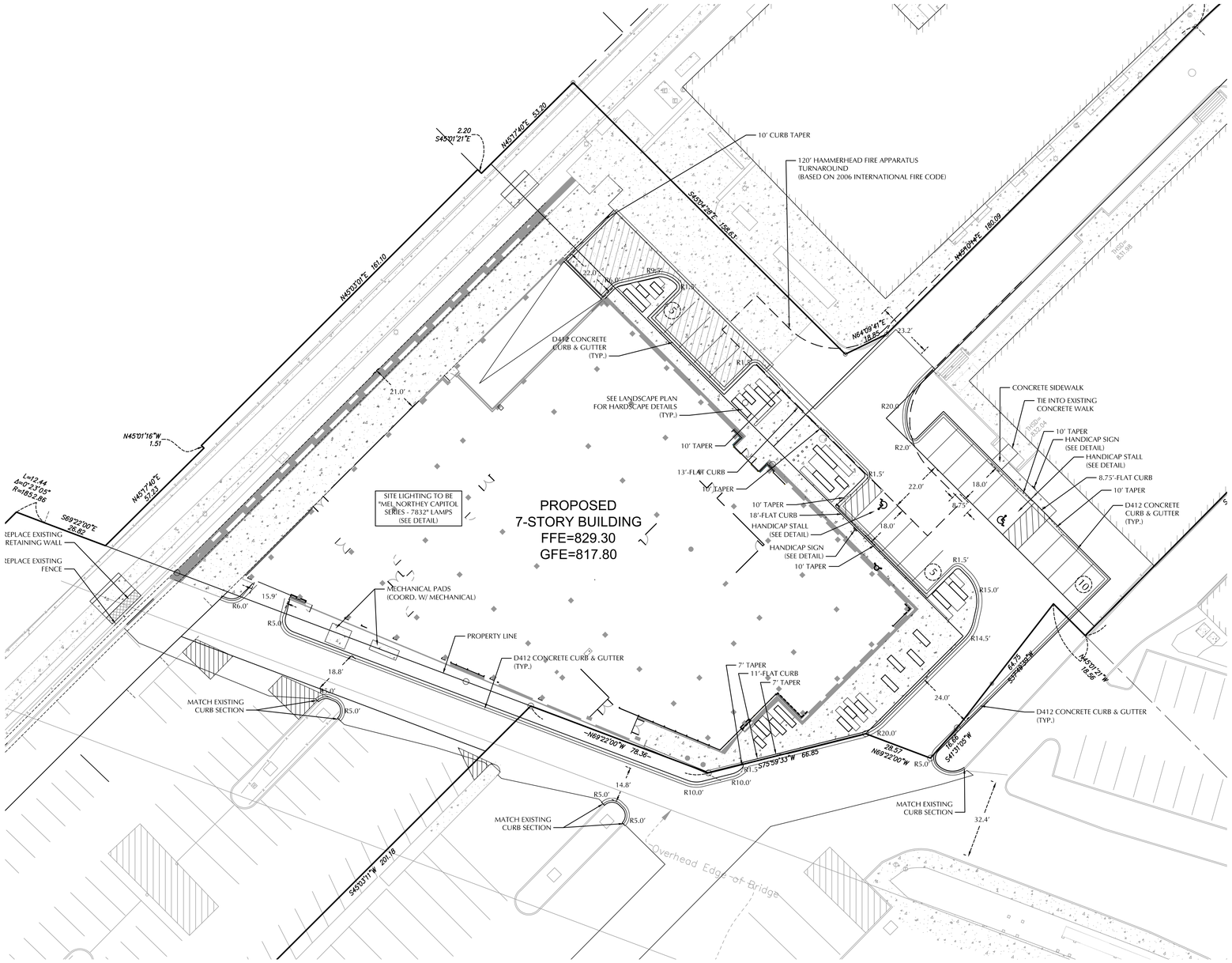

CALL BEFORE YOU DIG!

Gopher State One Call

TWIN CITY AREA: 651-454-0002
TOLL FREE: 1-800-252-1166

WARNING:

THE CONTRACTOR SHALL BE RESPONSIBLE FOR CALLING FOR LOCATIONS OF ALL EXISTING UTILITIES. THEY SHALL COOPERATE WITH ALL UTILITY COMPANIES IN MAINTAINING THEIR SERVICE AND / OR RELOCATION OF LINES.

THE CONTRACTOR SHALL CONTACT GOPHER STATE ONE CALL AT 651-454-0002 AT LEAST 48 HOURS IN ADVANCE FOR THE LOCATIONS OF ALL UNDERGROUND WIRES, CABLES, CONDUITS, PIPES, MANHOLES, VALVES OR OTHER BURIED STRUCTURES BEFORE DIGGING. THE CONTRACTOR SHALL REPAIR OR REPLACE THE ABOVE WHEN DAMAGED DURING CONSTRUCTION AT NO COST TO THE OWNER.

SITE NOTES

1. ALL PAVING, CONCRETE CURB, GUTTER AND SIDEWALK SHALL BE FURNISHED AND INSTALLED IN ACCORDANCE WITH THE DETAILS SHOWN PER SHEET C8-1 AND THE REQUIREMENTS OF THE CITY. SEE LANDSCAPE PLANS FOR ANY ADDITIONAL HARDSCAPE APPLICATIONS
2. THE CITY DEPARTMENT OF ENGINEERING, BUILDING INSPECTIONS DEPARTMENT AND THE CONSTRUCTION ENGINEER SHALL BE NOTIFIED AT LEAST 48 HOURS PRIOR TO WORK WITHIN THE STREET RIGHT OF WAY (SIDEWALK, STREET OR DRIVEWAYS)
3. MINNESOTA STATE STATUTE REQUIRES NOTIFICATION PER "GOPHER STATE ONE CALL" PRIOR TO COMMENCING ANY GRADING, EXCAVATION OR UNDERGROUND WORK.
4. THE CONTRACTOR SHALL PRESERVE AND MAINTAIN ANY EXISTING STREET LIGHTS AND TRAFFIC SIGNS PER THE REQUIREMENTS OF THE CITY
5. CLEAR AND GRUB AND REMOVE ALL TREES, VEGETATION AND SITE DEBRIS PRIOR TO GRADING. ALL REMOVED MATERIAL SHALL BE HAULED FROM THE SIDE DAILY. ALL CLEARING AND GRUBBING AND REMOVALS SHALL BE PERFORMED PER THE CONTRACT SPECIFICATIONS. EROSION CONTROL MEASURES SHALL BE IMMEDIATELY ESTABLISHED UPON REMOVAL. (SEE SHEET C3-2)
6. THE CONTRACTOR SHALL BE REQUIRED TO OBTAIN ALL PERMITS FROM THE CITY AS REQUIRED FOR ALL WORK WITH THE STREET AND PUBLIC RIGHT OF WAY
7. STALL STRIPING TO BE 4" WHITE PAINT. REFER TO DETAILS FOR HANDICAPPED STALL STRIPING. ALL STRIPING TO BE EPOXY.
8. ALL CURB TERMINI TO HAVE A 3 FOOT TAPER UNLESS OTHERWISE NOTED.
9. ALL CURB DIMENSIONS SHOWN ARE TO THE FACE OF CURB UNLESS OTHERWISE NOTED.
10. BITUMINOUS IMPREGNATED FIBER BOARD TO BE PLACED AT FULL DEPTH OF CONCRETE ADJACENT TO EXISTING STRUCTURES AND BEHIND CURB ADJACENT TO DRIVEWAYS AND SIDEWALKS.
11. IN THE EVENT OF A SIGNIFICANT SNOWFALL, SNOW SHALL BE REMOVED BY TRUCK OR SNOW MELT MACHINE.

SITE DATA

DISTURBED AREA:	1.59 AC
TOTAL SITE AREA:	1.04 AC
EXISTING IMPERVIOUS AREA:	1.04 AC (100%)
PROPOSED IMPERVIOUS AREA:	1.02 AC (98%)

PAVEMENT TYPES

BITUMINOUS PAVEMENT

CONCRETE SIDEWALK

CONCRETE PAVEMENT

NORTH

SCALE IN FEET 0 20 40

BENCHMARKS

TOP NUT HYDRANT ALONG NORTHWEST SIDE OF 3RD AVE. N.,
ELEVATION = 841.21 (NGVD1929)

MINNEAPOLIS SURVEY MONUMENT:
CENTER OF 2ND AVE. N. AND 4TH ST. N.
ELEVATION = 848.98 (NGVD1929)

MGA DLR Group

© MGA 2013
© 2015 DLR Group inc., A Wisconsin Corporation. ALL RIGHTS RESERVED

LOUCKS ASSOCIATES
Planning • Civil Engineering • Land Surveying
Landscape Architecture • Environmental

7200 Hemlock Lane - Suite 300
Maple Grove, MN 55369
Telephone: (763) 424-5505
www.LoucksAssociates.com
Loucks Project #14019F

I hereby certify that this plan, specification or report was prepared by me or under my direct supervision and that I am a duly Licensed Professional Engineer under the laws of the State of Minnesota.

Nicholas M. Mainel - PE

45861 — License No.
02/27/15 — Date

MICHAEL GREEN ARCHITECTURE
57 E CORDOVA STREET
VANCOUVER BC
CANADA V6A 1K3

DLR Group Inc.
520 Nicollet Mall, Suite 200
MINNEAPOLIS, MN 55402
USA

DATE	REV	DESCRIPTION
2015 03 05		CHECK SET
2015 02 27		LAND USE APPLICATION
2015 02 18		BID PACKAGE #1

MINNEAPOLIS T3
323 N. Washington Ave.
Minneapolis, MN 55401

40-14127-00

C2.1

SITE PLAN

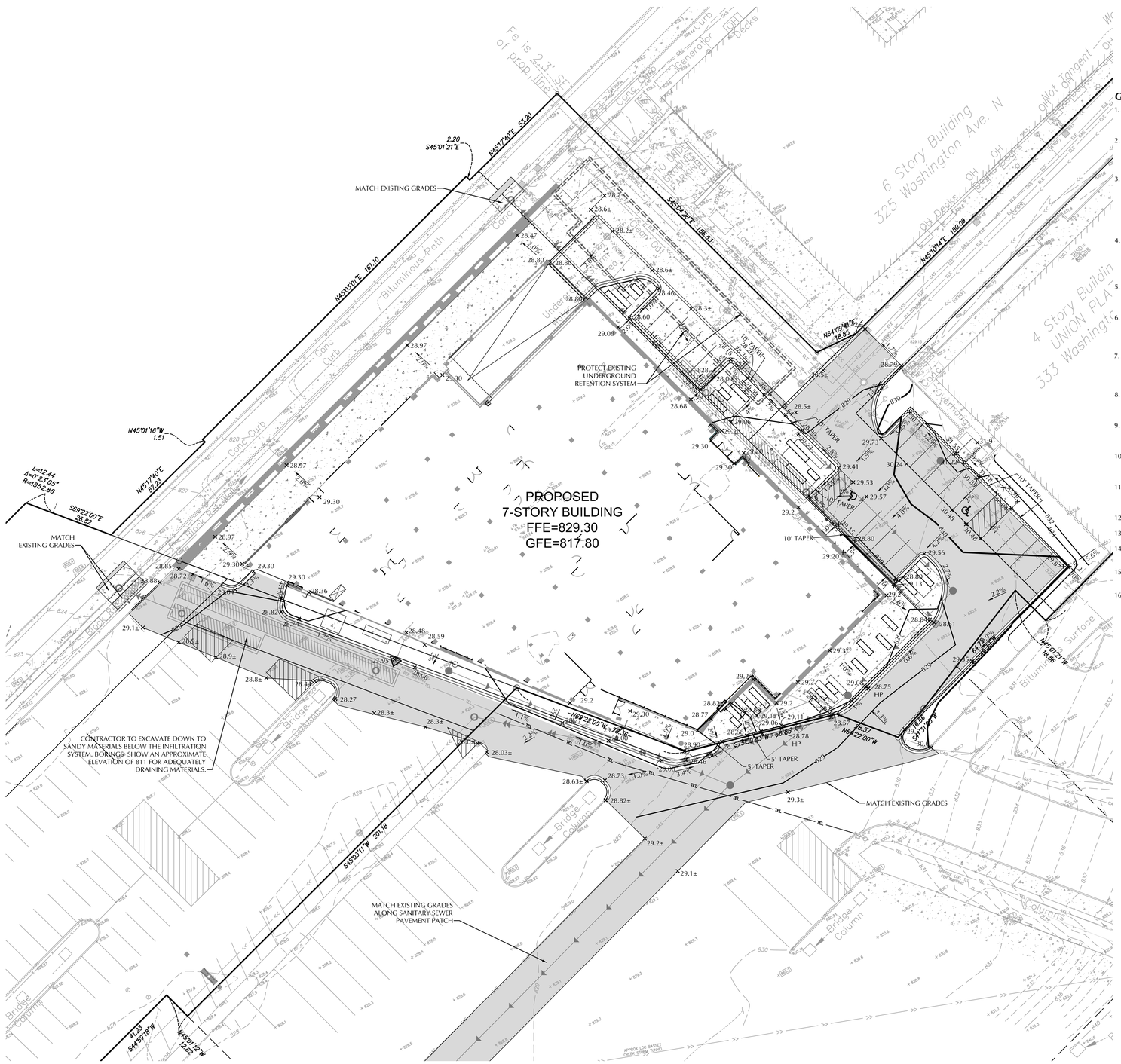

CALL BEFORE YOU DIG!
Gopher State One Call
TWIN CITY AREA: 651-454-0002
TOLL FREE: 1-800-252-1166

GRADING, DRAINAGE & EROSION CONTROL NOTES

1. ALL DISTURBED UNPAVED AREAS ARE TO RECEIVE MINIMUM OF 4 INCHES OF TOP SOIL AND SOD OR SEED. THESE AREAS SHALL BE WATERED BY THE CONTRACTOR UNTIL THE SOD OR SEED IS GROWING IN A HEALTHY MANNER.
2. THE CONTRACTOR SHALL TAKE ALL PRECAUTIONS NECESSARY TO AVOID PROPERTY DAMAGE TO ADJACENT PROPERTIES DURING THE CONSTRUCTION PHASE OF THIS PROJECT. THE CONTRACTOR WILL BE HELD RESPONSIBLE FOR ANY DAMAGES TO ADJACENT PROPERTIES OCCURRING DURING THE CONSTRUCTION PHASE OF THIS PROJECT.
3. THE CONTRACTOR WILL BE RESPONSIBLE FOR PROVIDING AND MAINTAINING TRAFFIC CONTROL DEVICES SUCH AS BARRICADES, WARNING SIGNS, DIRECTIONAL SIGNS, FLAGMEN AND LIGHTS TO CONTROL THE MOVEMENT OF TRAFFIC WHERE NECESSARY. PLACEMENT OF THESE DEVICES SHALL BE APPROVED BY THE ENGINEER PRIOR TO PLACEMENT. TRAFFIC CONTROL DEVICES SHALL BE APPROVED BY THE ENGINEER PRIOR TO PLACEMENT. TRAFFIC CONTROL DEVICES SHALL CONFORM TO THE APPROPRIATE MINNESOTA DEPARTMENT OF TRANSPORTATION STANDARDS.
4. IN ACCORDANCE WITH GENERALLY ACCEPTED CONSTRUCTION PRACTICES, THE CONTRACTOR WILL BE SOLELY AND COMPLETELY RESPONSIBLE FOR CONDITIONS ON THE JOB SITE, INCLUDING SAFETY OF ALL PERSONS AND PROPERTY DURING THE PERFORMANCE OF THE WORK. THIS REQUIREMENT WILL APPLY CONTINUOUSLY AND NOT BE LIMITED TO NORMAL WORKING HOURS.
5. THE DUTY OF THE ENGINEER OF THE DEVELOPER TO CONDUCT CONSTRUCTION REVIEW OF THE CONTRACTORS PERFORMANCE IS NOT INTENDED TO INCLUDE REVIEW OF THE ADEQUACY OF THE CONTRACTORS SAFETY MEASURES IN, OR NEAR THE CONSTRUCTION SITE.
6. BEFORE BEGINNING CONSTRUCTION THE CONTRACTOR SHALL INSTALL A TEMPORARY ROCK ENTRANCE PAD AT ALL POINTS OF VEHICLE EXIT FROM THE PROJECT SITE. SAID ROCK ENTRANCE PAD SHALL BE MAINTAINED BY THE CONTRACTOR FOR THE DURATION OF THE PROJECT. SEE DETAILS SHOWN ON SHEET C3-2 FOR THE PROJECT PLANS
7. EROSION AND SEDIMENTATION CONTROL MEASURES SHALL BE ESTABLISHED AROUND THE ENTIRE SITE PERIMETER AND IN ACCORDANCE WITH NPDES PERMIT REQUIREMENTS, BEST MANAGEMENT PRACTICES, CITY REQUIREMENTS AND THE DETAILS SHOWN ON SHEET C8-1 OF THE PROJECT PLANS.
8. ALL ENTRANCES AND CONNECTIONS TO CITY STREET SHALL BE PERFORMED PER THE REQUIREMENTS OF THE CITY. THE CONTRACTOR SHALL BE RESPONSIBLE FOR ALL PERMITS AND NOTIFICATIONS AS REQUIRED BY THE CITY.
9. ADJACENT STREETS AND ALLEYS MUST BE SWEPT TO KEEP THEM FREE OF SEDIMENT. CONTRACTOR MUST MONITOR CONDITIONS AND SWEEP AS NEEDED OR WITHIN 24 HOURS OF NOTICE BY THE CITY.
10. STREETS MUST BE CLEANED AND SWEPT WHENEVER TRACKING OF SEDIMENTS OCCURS AND BEFORE SITES ARE LEFT IDLE FOR WEEKENDS AND HOLIDAYS. A REGULAR SWEEPING SCHEDULE MUST BE ESTABLISHED.
11. ADJUST ALL EXISTING STRUCTURES, BOTH PUBLIC AND PRIVATE TO THE PROPOSED GRADES WHERE DISTURBED AND COMPLY WITH ALL REQUIREMENTS OF THE UTILITY OWNERS. STRUCTURES BEING RESET TO PAVED AREAS MUST MEET OWNERS REQUIREMENTS FOR TRAFFIC
12. DUST MUST BE ADEQUATELY CONTROLLED.
13. SEE UTILITY PLAN FOR STORM SEWER INFORMATION.
14. EXISTING TOPOGRAPHY PROVIDED BY LOUCKS ASSOCIATES PARTIAL TOPOGRAPHIC SURVEY DATED 04/24/14.
15. SPOT ELEVATIONS REPRESENT FINISHED SURFACE GRADES AT GUTTER LINE, FACE OF BUILDING, OR EDGE OF PAVEMENT UNLESS OTHERWISE NOTED.
16. SEE SITE PLAN FOR CURB AND BITUMINOUS TAPER LOCATIONS.

BENCHMARKS

TOP NUT HYDRANT ALONG NORTHWEST SIDE OF 3RD AVE. N.,
ELEVATION = 841.21 (NGVD1929)

MINNEAPOLIS SURVEY MONUMENT:
CENTER OF 2ND AVE. N. AND 4TH ST. N.
ELEVATION = 848.98 (NGVD1929)

NORTH

0 20 40
SCALE IN FEET

WARNING:

THE CONTRACTOR SHALL BE RESPONSIBLE FOR CALLING FOR LOCATIONS OF ALL EXISTING UTILITIES. THEY SHALL COOPERATE WITH ALL UTILITY COMPANIES IN MAINTAINING THEIR SERVICE AND / OR RELOCATION OF LINES.

THE CONTRACTOR SHALL CONTACT GOPHER STATE ONE CALL AT 651-454-0002 AT LEAST 48 HOURS IN ADVANCE FOR THE LOCATIONS OF ALL UNDERGROUND WIRES, CABLES, CONDUITS, PIPES, MANHOLES, VALVES OR OTHER BURIED STRUCTURES BEFORE DIGGING. THE CONTRACTOR SHALL REPAIR OR REPLACE THE ABOVE WHEN DAMAGED DURING CONSTRUCTION AT NO COST TO THE OWNER.

MGA
DLR Group
© MGA 2015
© 2015 DLR Group inc., A Wisconsin Corporation - ALL RIGHTS RESERVED

LOUCKS ASSOCIATES
Planning • Civil Engineering • Land Surveying
Landscape Architecture • Environmental
7200 Hemlock Lane - Suite 300
Maple Grove, MN 55369
Telephone: (763) 424-5505
www.LoucksAssociates.com
Loucks Project #14019F

I hereby certify that this plan, specification or report was prepared by me or under my direct supervision and that I am a duly licensed Professional Engineer under the laws of the State of Minnesota.

Nicholas M. Mummel - PE
45861 — License No.
02/27/15 — Date

MICHAEL GREEN ARCHITECTURE
57 E CORDOVA STREET
VANCOUVER BC
CANADA V6A 1K3

DLR Group Inc.
520 Nicollet Mall, Suite 200
MINNEAPOLIS, MN 55402
USA

DATE	REV	DESCRIPTION
2015 03 05		CHECK SET
2015 02 27		LAND USE APPLICATION
2015 02 18		BID PACKAGE #1

MINNEAPOLIS T3
323 N. Washington Ave.
Minneapolis, MIN 55401

40-14127-00

C3.1

GRADING & DRAINAGE PLAN

CALL BEFORE YOU DIG!

Gopher State One Call

TWIN CITY AREA: 651-454-0002
TOLL FREE: 1-800-252-1166

WARNING:

THE CONTRACTOR SHALL BE RESPONSIBLE FOR CALLING FOR LOCATIONS OF ALL EXISTING UTILITIES. THEY SHALL COOPERATE WITH ALL UTILITY COMPANIES IN MAINTAINING THEIR SERVICE AND / OR RELOCATION OF LINES.

THE CONTRACTOR SHALL CONTACT GOPHER STATE ONE CALL AT 651-454-0002 AT LEAST 48 HOURS IN ADVANCE FOR THE LOCATIONS OF ALL UNDERGROUND WIRES, CABLES, CONDUITS, PIPES, MANHOLES, VALVES OR OTHER BURIED STRUCTURES BEFORE DIGGING. THE CONTRACTOR SHALL REPAIR OR REPLACE THE ABOVE WHEN DAMAGED DURING CONSTRUCTION AT NO COST TO THE OWNER.

NORTH

0 20 40
SCALE IN FEET

BENCHMARKS

TOP NUT HYDRANT ALONG NORTHWEST SIDE OF 3RD AVE. N.,
ELEVATION = 841.21 (NGVD1929)

MINNEAPOLIS SURVEY MONUMENT:
CENTER OF 2ND AVE. N. AND 4TH ST. N.
ELEVATION = 848.98 (NGVD1929)

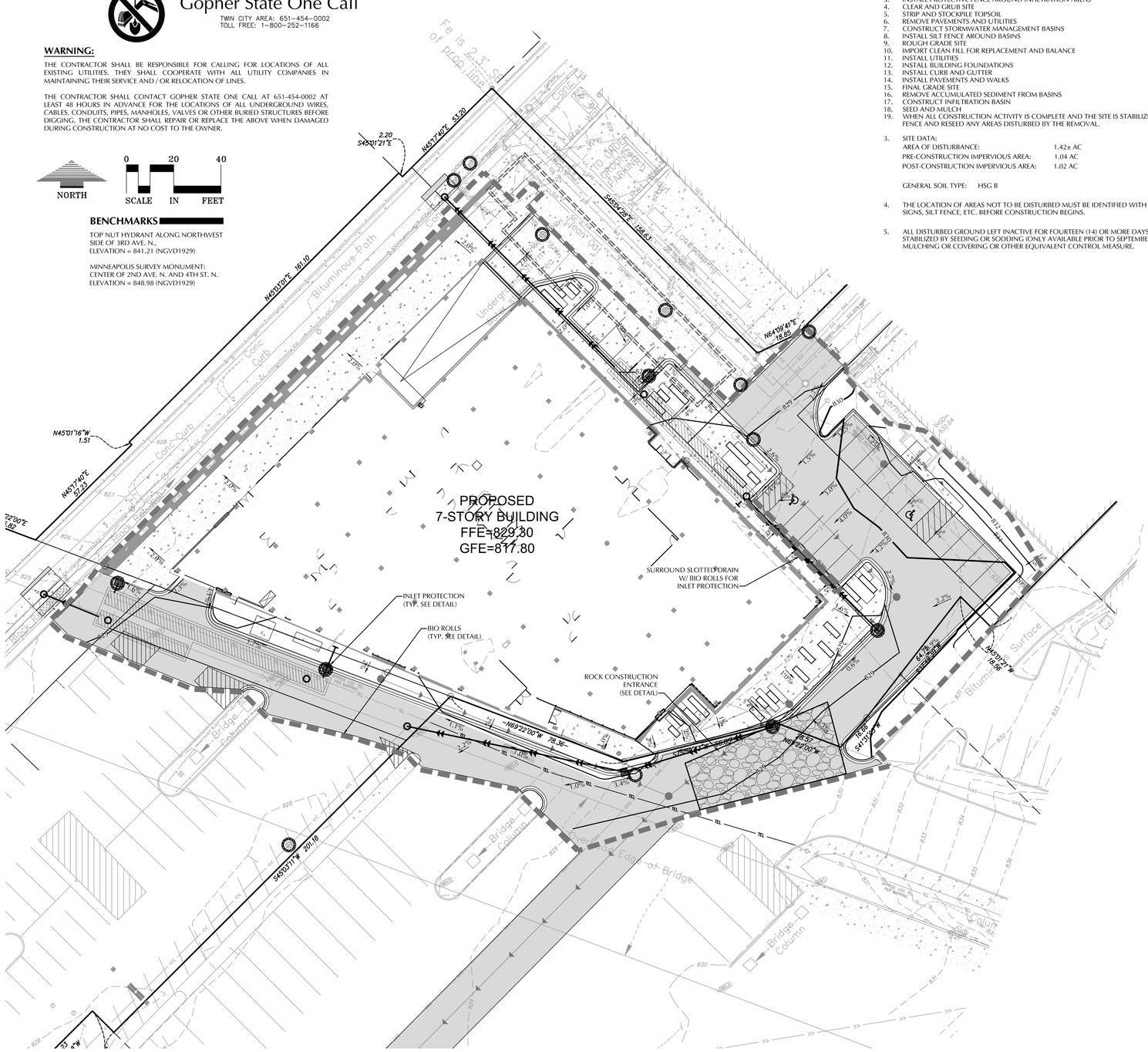

SWPPP NOTES

1. THE NATURE OF THIS PROJECT WILL CONSIST OF CONSTRUCTING AN OFFICE BUILDING WITH ASSOCIATED SURFACE PAVEMENTS, UTILITIES AND STORMWATER MANAGEMENT.

2. THE INTENDED SEQUENCING OF MAJOR CONSTRUCTION ACTIVITIES ARE AS FOLLOWS:

1. INSTALL VEHICLE TRACKING BMP
2. INSTALL SILT FENCE AROUND SITE
3. INSTALL PROTECTIVE FENCE AROUND INFILTRATION AREAS
4. CLEAR AND GRUB SITE
5. STRIP AND STOCKPILE TOPSOIL
6. REMOVE PAVEMENTS AND UTILITIES
7. CONSTRUCT STORMWATER MANAGEMENT BASINS
8. INSTALL SILT FENCE AROUND BASINS
9. ROUGH GRADE SITE
10. IMPORT CLEAN FILL FOR REPLACEMENT AND BALANCE
11. INSTALL UTILITIES
12. INSTALL BUILDING FOUNDATIONS
13. INSTALL CURB AND GUTTER
14. INSTALL PAVEMENTS AND WALKS
15. FINAL GRADE SITE
16. REMOVE ACCUMULATED SEDIMENT FROM BASINS
17. CONSTRUCT INFILTRATION BASIN
18. SEED AND MULCH
19. WHEN ALL CONSTRUCTION ACTIVITY IS COMPLETE AND THE SITE IS STABILIZED, REMOVE SILT FENCE AND RESEED ANY AREAS DISTURBED BY THE REMOVAL.

3. SITE DATA:
   AREA OF DISTURBANCE: 1.42± AC
   PRE-CONSTRUCTION IMPERVIOUS AREA: 1.04 AC
   POST-CONSTRUCTION IMPERVIOUS AREA: 1.02 AC

   GENERAL SOIL TYPE: HSG B

4. THE LOCATION OF AREAS NOT TO BE DISTURBED MUST BE IDENTIFIED WITH FLAGS, STAKES, SIGNS, SILT FENCE, ETC. BEFORE CONSTRUCTION BEGINS.

5. ALL DISTURBED GROUND LEFT INACTIVE FOR FOURTEEN (14) OR MORE DAYS SHALL BE STABILIZED BY SEEDING OR SODDING (ONLY AVAILABLE PRIOR TO SEPTEMBER 15) OR BY MULCHING OR COVERING OR OTHER EQUIVALENT CONTROL MEASURE.

6. ON SLOPES 3:1 OR GREATER MAINTAIN SHEET FLOW AND MINIMIZE RILLS AND/OR GULLIES, SLOPE LENGTHS CAN NOT BE GREATER THAN 75 FEET.
   DENOTES SLOPES GREATER THAN 3:1. ALL 3:1 SLOPES TO BE STABILIZED WITH EROSION CONTROL BLANKET

7. ALL STORM DRAINS AND INLETS MUST BE PROTECTED UNTIL ALL SOURCES OF POTENTIAL DISCHARGE ARE STABILIZED.

8. TEMPORARY SOIL STOCKPILES MUST HAVE EFFECTIVE SEDIMENT CONTROL AND CAN NOT BE PLACED IN SURFACE WATERS OR STORM WATER CONVEYANCE SYSTEMS. TEMPORARY STOCKPILES WITHOUT SIGNIFICANT AMOUNT OF SILT, CLAY, OR ORGANIC COMPOUNDS ARE EXEPMT EX: CLEAN AGGREGATE STOCK PILES, DEMOLITION CONCRETE STOCKPILES, SAND STOCKPILES.

9. SEDIMENT LADEN WATER MUST BE DISCHARGED TO A SEDIMENTATION BASIN WHENEVER POSSIBLE. IF NOT POSSIBLE, IT MUST BE TREATED WITH THE APPROPRIATE BMP'S.

10. SOLID WASTE MUST BE DISPOSED OF PROPERLY AND MUST COMPLY WITH MPCA DISPOSAL REQUIREMENTS.

11. EXTERNAL WASHING OF CONSTRUCTION VEHICLES MUST BE LIMITED TO A DEFINED AREA OF THE SITE. RUNOFF MUST BE PROPERLY CONTAINED.

12. NO ENGINE DEGREASING IS ALLOWED ON SITE.

13. THE OWNER WHO SIGNS THE NPDES PERMIT APPLICATION IS A PERMITTEE AND IS RESPONSIBLE FOR COMPLIANCE WITH ALL TERMS AND CONDITIONS OF THE PERMIT. THE OPERATOR (CONTRACTOR) WHO SIGNS THE NPDES PERMIT APPLICATION IS A PERMITTEE FOR PARTS II.B., PART II.C., PART II.B-F, PART V, PART IV AND APPLICABLE CONSTRUCTION ACTIVITY REQUIREMENTS FOUND IN APPENDIX A, PART C. OF THE NPDES PERMIT AND IS JOINTLY RESPONSIBLE WITH THE OWNER FOR COMPLIANCE WITH THOSE PORTIONS OF THE PERMIT.

14. TERMINATION OF COVERAGE-PERMITTEE(S) WISHING TO TERMINATE COVERAGE MUST SUBMIT A NOTICE OF TERMINATION (NOT) TO THE MPCA. ALL PERMITTEE(S) MUST SUBMIT A NOT WITHIN 30 DAYS AFTER ONE OR MORE OF THE FOLLOWING CONDITIONS HAVE BEEN MET:

   A. FINAL STABILIZATION. PER NPDES PERMIT PART IV.G. HAS BEEN ACHIEVED ON ALL PORTIONS OF THE SITE FOR WHICH THE PERMITTEE IS RESPONSIBLE.
   B. TRANSFER OF OWNERSHIP AS DESCRIBED IN THE PERMIT.

15. INSPECTIONS
   A. INITIAL INSPECTION FOLLOWING SILT FENCE INSTALLATION BY CITY REPRESENTATIVE IS REQUIRED.
   B. EXPOSED SOIL AREAS: ONCE EVERY 7 DAYS AND WITHIN 24 HOURS FOLLOWING A 0.5" OVER 24 HOUR RAIN EVENT.
   C. STABILIZED AREAS: ONCE EVERY 30 DAYS
   D. FROZEN GROUND: AS SOON AS RUNOFF OCCURS OR PRIOR TO RESUMING CONSTRUCTION.
   E. INSPECTION AND MAINTENANCE RECORDS MUST BE RETAINED FOR 3 YEARS AFTER FILING OF THE NOTICE OF TERMINATION AND MUST INCLUDE: DATE AND TIME OF ACTION, NAME OF PERSON(S) CONDUCTING WORK, FINDING OF INSPECTIONS AND RECOMMENDATIONS FOR CORRECTIVE ACTION, DATE AND AMOUNT OF RAINFALL EVENTS GREATER THAN 0.5 INCHES IN A 24 HOUR PERIOD.

16. MINIMUM MAINTENANCE
   A. SILT FENCE TO BE REPAIRED, REPLACED, SUPPLEMENTED WHEN NONFUNCTIONAL, OR 1/3 FULL; WITHIN 24 HOURS
   B. SEDIMENT BASINS DRAINED AND SEDIMENT REMOVED WHEN REACHES 1/2 STORAGE VOLUME. REMOVAL MUST BE COMPLETE WITHIN 72 HOURS OF DISCOVERY.
   C. SEDIMENT REMOVED FROM SURFACE WATERS WITHIN (7)SEVEN DAYS
   D. CONSTRUCTION SITE EXITS INSPECTED, TRACKED SEDIMENT REMOVED WITH 24 HOURS.
   E. PROVIDE COPIES OF EROSION INSPECTION RESULTS TO CITY ENGINEER FOR ALL EVENTS GREATER THAN ½" IN 24 HOURS

17. THE SWPPP, INCLUDING ALL CHANGES TO IT, AND INSPECTIONS AND MAINTENANCE RECORDS MUST BE KEPT AT THE SITE DURING CONSTRUCTION ACTIVITY BY THE PERMITTEE(S) WHO HAVE OPERATIONAL CONTROL OF THE SITE.

18. OWNER MUST KEEP RECORDS OF ALL PERMITS REQUIRED FOR THE PROJECT, THE SWPPP, ALL INSPECTIONS AND MAINTENANCE, PERMANENT OPERATION AND MAINTENANCE AGREEMENTS, AND REQUIRED CALCULATIONS FOR TEMPORARY AND PERMANENT STORM WATER MANAGEMENT SYSTEMS. THESE RECORDS MUST BE RETAINED FOR THREE YEARS AFTER FILING NPDES NOTICE OF TERMINATION.

19. SWPPP MUST BE AMENDED WHEN:
   A. THERE IS A CHANGE IN DESIGN, OPERATION, MAINTENANCE, WEATHER OR SEASONAL CONDITIONS THAT HAS A SIGNIFICANT EFFECT ON DISCHARGE
   B. INSPECTIONS INDICATE THAT THE SWPPP IS NOT EFFECTIVE AND DISCHARGE IS EXCEEDING WATER QUALITY STANDARDS.
   C. THE BMP'S IN THE SWPPP ARE NOT CONTROLLING POLLUTANTS IN DISCHARGES OR IS NOT CONSISTENT WITH THE TERMS AND CONDITIONS OF THE PERMIT.

19. CONCRETE WASHOUT AREA
   A. CONTRACTOR TO PROVIDE PREFABRICATED CONCRETE WASH-OUT CONTAINER WITH RAIN PROTECTION PER PLAN.
   B. CONCRETE WASH-OUT TO BE IDENTIFIED WITH SIGNAGE STATING "CONCRETE WASHOUT AREA DO NOT OVERFILL".
   C. CONCRETE WASHOUT WATER NEEDS TO BE PUMPED WITHIN 24 HOURS OF STANDING WATER IN WASHOUT AREA.

20. IN THE EVENT OF ENCOUNTERING A WELL OR SPRING DURING CONSTRUCTION CONTRACTOR TO CEASE CONSTRUCTION ACTIVITY AND NOTIFY ENGINEER.

21. PIPE OULTETS MUST BE PROVIDED WITH TEMPORARY OR PERMANENT ENERGY DISSIPATION WITHIN 24 HOURS AFTER CONNECTION TO A SURFACE WATER.

22. FINAL STABILIZATION
   FINAL STABILIZATION REQUIRES THAT ALL SOIL DISTURBING ACVTIVITIES HAVE BEEN COMPLETED AND THAT DISTURBED AREAS ARE STABILIZED BY A UNIFORM PERENNIAL VEGETATIVE COVER WITH 70% OF THE EXPECTED FINAL DENSITY, AND THAT ALL PERMANENT PAVEMENTS HAVE BEEN INSTALLED. ALL TEMPORARY BMP'S SHALL BE REMOVED, DITCHES STABILIZED, AND SEDIMENT SHALL BE REMOVED FROM PERMANENT CONVEYANCES AND SEDIMENTATION BASINS IN ORDER TO RETURN THE POND TO DESIGN CAPACITY.

23. RESPONSIBILITIES
   A. THE OWNER MUST IDENTIFY A PERSON WHO WILL OVERSEE THE SWPPP IMPLEMENTATION AND THE PERSON RESPONSIBLE FOR INSPECTION AND MAINTENANCE:
   CONTACT: _____
   COMPANY: _____
   PHONE: _____

   B. THE OWNER MUST IDENTIFY THE A PERSON WHO WILL BE RESPONSIBLE FOR LONG TERM OPERATIONS AND MAINTENANCE OF THE PERMANENT STORMWATER MANAGEMENT SYSTEM:
   CONTACT: _____
   COMPANY: _____
   PHONE: _____

24. THE WATERSHED DISTRICT OR THE CITY MAY HAVE REQUIREMENTS FOR INSPECTIONS OR AS-BUILT DRAWINGS VERIFYING PROPER CONSTRUCTION OF THE BMPS.

MGA ©MGA2013
DLR Group
© 2015 DLR Group inc. A Wisconsin Corporation. ALL RIGHTS RESERVED

LOUCKS ASSOCIATES
Planning • Civil Engineering • Land Surveying
Landscape Architecture • Environmental
7200 Hemlock Lane - Suite 300
Maple Grove, MN 55369
Telephone: (763) 424-5505
www.LoucksAssociates.com
Loucks Project #14019F

I hereby certify that this plan, specification or report was prepared by me or under my direct supervision and that I am a duly licensed Professional Engineer under the laws of the State of Minnesota.

Nicholas M. Manuel - PE
45861 License No.
02/27/15 Date

MICHAEL GREEN ARCHITECTURE
57 E CORDOVA STREET
VANCOUVER BC
CANADA V6A 1K3

DLR Group Inc.
520 Nicollet Mall, Suite 200
MINNEAPOLIS, MN 55402
USA

DATE	REV	DESCRIPTION
2015 03 05		CHECK SET
2015 02 27		LAND USE APPLICATION
2015 02 18		BID PACKAGE #1

MINNEAPOLIS T3
323 N. Washington Ave.
Minneapolis, MN 55401

40-14127-00

C3.2

STORM WATER
POLLUTION PREVENTION
PLAN - SWPPP

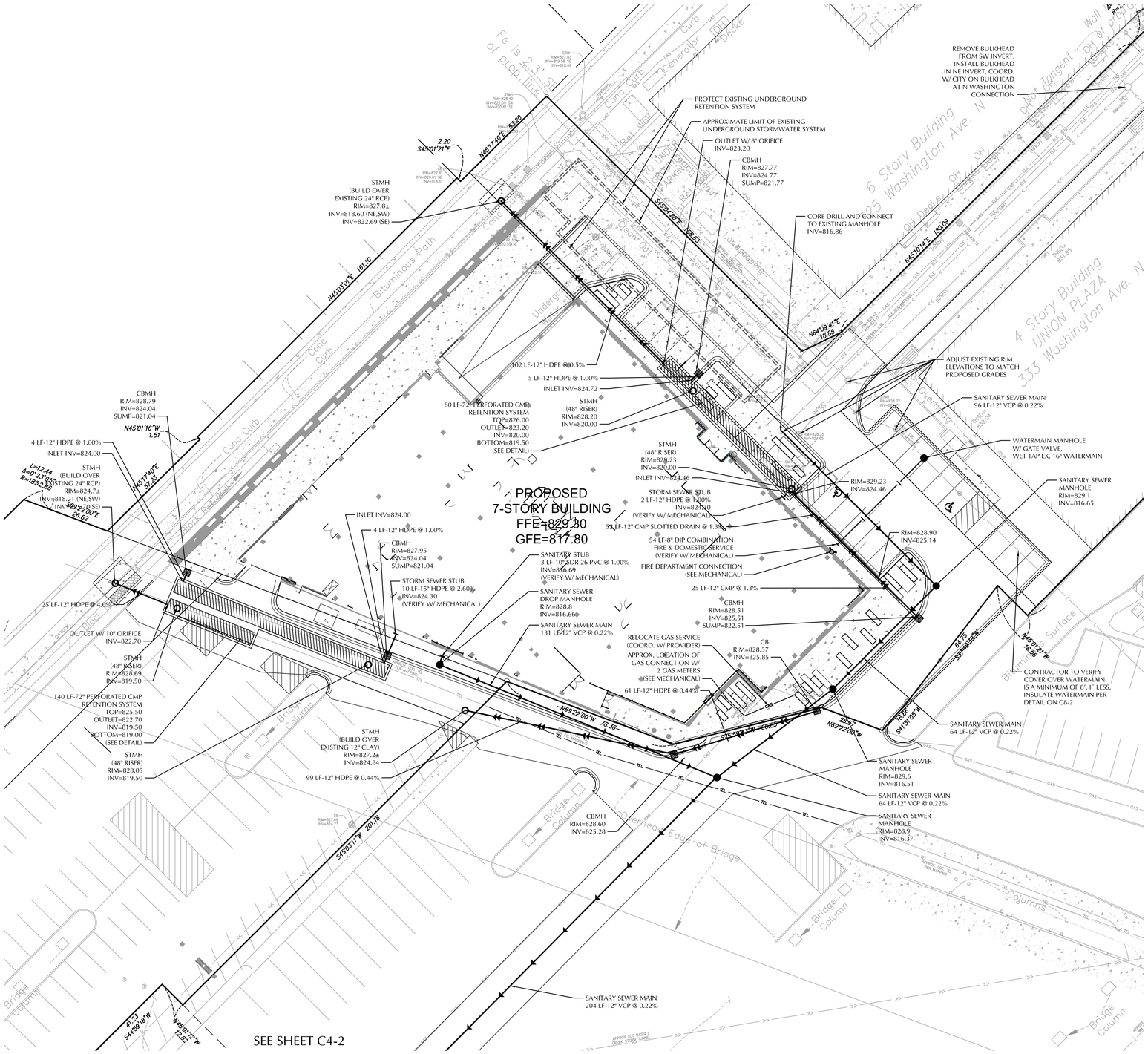

CALL BEFORE YOU DIG!

Gopher State One Call

TWIN CITY AREA: 651-454-0002
TOLL FREE: 1-800-252-1166

UTILITY PLAN NOTES

1. ALL SANITARY SEWER, STORM SEWER AND WATERMAIN UTILITIES SHALL BE FURNISHED AND INSTALLED PER THE REQUIREMENTS OF THE SPECIFICATIONS, THE CITY AND THE STANDARD UTILITIES SPECIFICATION OF THE CITY ENGINEERS ASSOCIATION OF MINNESOTA (CEAM), 1999 EDITION.

2. SEE DETAIL SHEET AND THE CONTRACT SPECIFICATIONS FOR SPECIFIC UTILITY DETAILS.

3. ALL CONNECTIONS TO EXISTING UTILITIES SHALL BE PERFORMED PER THE REQUIREMENTS OF THE CITY. THE CITY DEPARTMENT OF ENGINEERING AND BUILDING INSPECTIONS DEPARTMENT AND THE CONSTRUCTION ENGINEER MUST BE NOTIFIED AT LEAST 48 HOURS PRIOR TO ANY WORK WITHIN THE PUBLIC RIGHT OF WAY, OR WORK IMPACTING PUBLIC UTILITIES.

4. THE CONTRACTOR SHALL NOTIFY GOPHER STATE ONE CALL AT 651-454-0002 AT LEAST 48 HOURS PRIOR TO PERFORMING ANY EXCAVATION OR UNDERGROUND WORK.

5. THE CONTRACTOR SHALL FIELD ADJUST WATERMAIN TO AVOID CONFLICTS WITH SANITARY SEWER, STORM SEWER, AND SERVICES AS REQUIRED.

6. ALL STREET REPAIRS AND PATCHING SHALL BE PERFORMED PER THE REQUIREMENTS OF THE CITY. ALL TRAFFIC CONTROL SHALL BE PROVIDED BY THE CONTRACTOR AND SHALL BE ESTABLISHED PER THE REQUIREMENTS OF THE MINNESOTA MANUAL OF UNIFORM TRAFFIC CONTROL DEVICES (MMUTCD) AND THE CITY. THIS SHALL INCLUDE ALL SIGNAGE, BARRICADES, FLASHERS AND FLAGGERS AS NEEDED. ALL PUBLIC STREETS SHALL BE OPEN TO TRAFFIC AT ALL TIMES. NO ROAD CLOSURES SHALL BE PERMITTED WITHOUT THE EXPRESSED AUTHORITY OF OF THE CITY.

7. ALL UTILITY PIPE BEDDING SHALL BE COMPACTED SAND OR FINE GRANULAR MATERIAL PER THE REQUIREMENTS OF THE CITY. ALL COMPACTION SHALL BE PERFORMED PER THE REQUIREMENTS OF THE CEAM SPECIFICATION.

8. ADJUST ALL EXISTING STRUCTURES, BOTH PUBLIC AND PRIVATE TO THE PROPOSED GRADES WHERE DISTURBED AND COMPLY WITH ALL REQUIREMENTS OF THE UTILITY OWNERS. STRUCTURES BEING RESET TO PAVED AREAS MUST MEET OWNERS REQUIREMENTS FOR TRAFFIC LOADING.

9. MAINTAIN 8 FEET OF COVER OVER ALL WATERMAINS AND SERVICES.

10. GROUNDWATER WAS ENCOUNTERED BETWEEN 30' - 36' IN DEPTH.

11. THE CONTRACTOR, PROPERTY OWNER OR RESPONSIBLE PARTY SHALL CONTACT MINNEAPOLIS SURFACE WATERS AND SEWERS 48 HOURS PRIOR TO ANY EXCAVATION OR CONSTRUCTION RELATED TO OR IN THE LOCATION OF THE PROPOSED STORMWATER MANAGEMENT BMP (CONTACT PAUL CHELLSEN, 673-2406 OR PAUL.CHELLSEN@MINNEAPOLISMN.GOV)

12. UPON THE PROJECT'S COMPLETION THE GENERAL CONTRACTOR, PROPERTY OWNER OR RESPONSIBLE PARTY SHALL PROVIDE TO THE DEPARTMENT OF PUBLIC WORKS A FINAL STORMWATER MANAGEMENT REPORT INCLUDING RECORD DRAWINGS. THIS REPORT WILL SERVE AS A MEANS OF VERIFICATION THAT THE INTENT OF THE APPROVED STORMWATER MANAGEMENT DESIGN HAS BEEN MET. THIS FINAL REPORT SHALL SUBSTANTIATE THAT ALL ASPECTS OF THE ORIGINAL DESIGN HAVE BEEN ADEQUATELY PROVIDED FOR BY THE CONSTRUCTION OF THE PROJECT.

13. PROPOSED PIPE MATERIALS:

STORM SEWER	ALUMINZED TYPE 2 CSP	72" DIAMETER
STORM SEWER	ALUMINIZED TYPE 2 CSP OR DUAL WALL HDPE	12" DIAMETER
STORM SEWER	RCP	12" DIAMETER
WATER SERVICE	DIP CLASS 53	8" DIAMETER
SANITARY SERVICE	VCP	8" DIAMETER

BENCHMARKS

TOP NUT HYDRANT ALONG NORTHWEST SIDE OF 3RD AVE. N.,
ELEVATION = 841.21 (NGVD1929)

MINNEAPOLIS SURVEY MONUMENT:
CENTER OF 2ND AVE. N. AND 4TH ST. N.
ELEVATION = 848.98 (NGVD1929)

NORTH

0 20 40
SCALE IN FEET

WARNING:

THE CONTRACTOR SHALL BE RESPONSIBLE FOR CALLING FOR LOCATIONS OF ALL EXISTING UTILITIES. THEY SHALL COOPERATE WITH ALL UTILITY COMPANIES IN MAINTAINING THEIR SERVICE AND / OR RELOCATION OF LINES.

THE CONTRACTOR SHALL CONTACT GOPHER STATE ONE CALL AT 651-454-0002 AT LEAST 48 HOURS IN ADVANCE FOR THE LOCATIONS OF ALL UNDERGROUND WIRES, CABLES, CONDUITS, PIPES, MANHOLES, VALVES OR OTHER BURIED STRUCTURES BEFORE DIGGING. THE CONTRACTOR SHALL REPAIR OR REPLACE THE ABOVE WHEN DAMAGED DURING CONSTRUCTION AT NO COST TO THE OWNER.

MGA DLR Group

© MGA 2015
© 2015 DLR Group inc., A Minnesota Corporation. ALL RIGHTS RESERVED

LOUCKS ASSOCIATES
Planning • Civil Engineering • Land Surveying
Landscape Architecture • Environmental
7200 Hemlock Lane - Suite 300
Maple Grove, MN 55369
Telephone: (763) 424-5505
www.LoucksAssociates.com
Loucks Project #14019F

I hereby certify that this plan, specification or report was prepared by me or under my direct supervision and that I am a duly licensed Professional Engineer under the laws of the State of Minnesota.

Nicholas M. Mummel - PE
45861 — License No.
02/27/15 — Date

MICHAEL GREEN ARCHITECTURE
57 E CORDOVA STREET
VANCOUVER BC
CANADA V6A 1K3

DLR Group Inc.
520 Nicollet Mall, Suite 200
MINNEAPOLIS, MN 55402
USA

DATE	REV	DESCRIPTION
2015 03 05		CHECK SET
2015 02 27		LAND USE APPLICATION
2015 02 18		BID PACKAGE #1

MINNEAPOLIS T3
323 N. Washington Ave.
Minneapolis, MN 55401

40-14127-00

C4.1

UTILITY PLAN NORTH

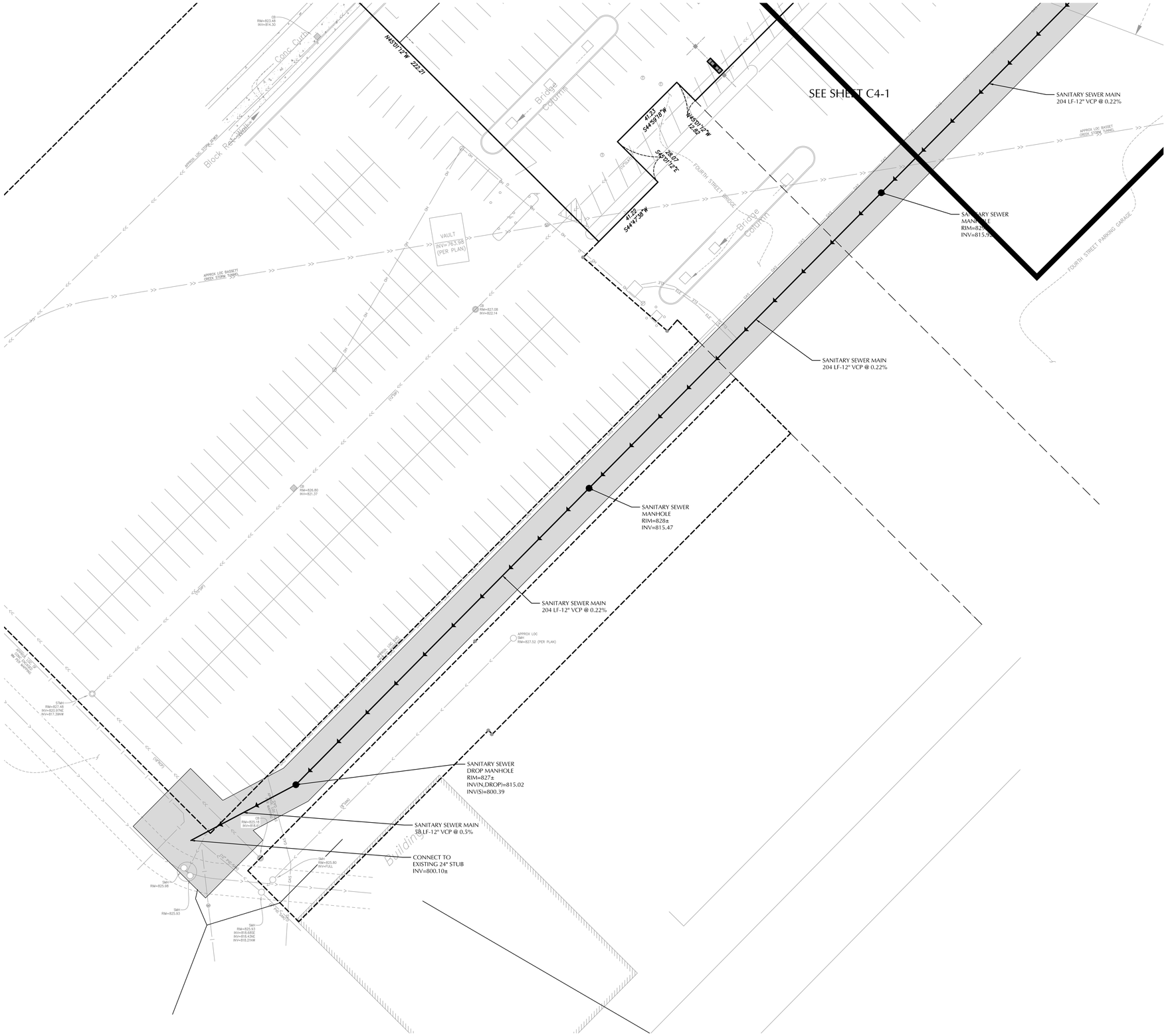

CALL BEFORE YOU DIG!

Gopher State One Call

TWIN CITY AREA: 651-454-0002
TOLL FREE: 1-800-252-1166

UTILITY PLAN NOTES

1. ALL SANITARY SEWER, STORM SEWER AND WATERMAIN UTILITIES SHALL BE FURNISHED AND INSTALLED PER THE REQUIREMENTS OF THE SPECIFICATIONS, THE CITY AND THE STANDARD UTILITIES SPECIFICATION OF THE CITY ENGINEERS ASSOCIATION OF MINNESOTA (CEAM), 1999 EDITION.

2. SEE DETAIL SHEET AND THE CONTRACT SPECIFICATIONS FOR SPECIFIC UTILITY DETAILS.

3. ALL CONNECTIONS TO EXISTING UTILITIES SHALL BE PERFORMED PER THE REQUIREMENTS OF THE CITY, THE CITY DEPARTMENT OF ENGINEERING AND BUILDING INSPECTIONS DEPARTMENT AND THE CONSTRUCTION ENGINEER MUST BE NOTIFIED AT LEAST 48 HOURS PRIOR TO ANY WORK WITHIN THE PUBLIC RIGHT OF WAY, OR WORK IMPACTING PUBLIC UTILITIES.

4. THE CONTRACTOR SHALL NOTIFY GOPHER STATE ONE CALL AT 651-454-0002 AT LEAST 48 HOURS PRIOR TO PERFORMING ANY EXCAVATION OR UNDERGROUND WORK.

5. THE CONTRACTOR SHALL FIELD ADJUST WATERMAIN TO AVOID CONFLICTS WITH SANITARY SEWER, STORM SEWER, AND SERVICES AS REQUIRED.

6. ALL STREET REPAIRS AND PATCHING SHALL BE PERFORMED PER THE REQUIREMENTS OF THE CITY. ALL TRAFFIC CONTROL SHALL BE PROVIDED BY THE CONTRACTOR AND SHALL BE ESTABLISHED PER THE REQUIREMENTS OF THE MINNESOTA MANUAL OF UNIFORM TRAFFIC CONTROL DEVICES (MMUTCD) AND THE CITY. THIS SHALL INCLUDE ALL SIGNAGE, BARRICADES, FLASHERS AND FLAGGERS AS NEEDED. ALL PUBLIC STREETS SHALL BE OPEN TO TRAFFIC AT ALL TIMES. NO ROAD CLOSURES SHALL BE PERMITTED WITHOUT THE EXPRESSED AUTHORITY OF OF THE CITY.

7. ALL UTILITY PIPE BEDDING SHALL BE COMPACTED SAND OR FINE GRANULAR MATERIAL PER THE REQUIREMENTS OF THE CITY. ALL COMPACTION SHALL BE PERFORMED PER THE REQUIREMENTS OF THE CEAM SPECIFICATION.

8. ADJUST ALL EXISTING STRUCTURES, BOTH PUBLIC AND PRIVATE TO THE PROPOSED GRADES WHERE DISTURBED AND COMPLY WITH ALL REQUIREMENTS OF THE UTILITY OWNERS. STRUCTURES BEING RESET TO PAVED AREAS MUST MEET OWNERS REQUIREMENTS FOR TRAFFIC LOADING.

9. MAINTAIN 8 FEET OF COVER OVER ALL WATERMAINS AND SERVICES.

10. GROUNDWATER WAS ENCOUNTERED BETWEEN 30' - 36' IN DEPTH.

11. THE CONTRACTOR, PROPERTY OWNER OR RESPONSIBLE PARTY SHALL CONTACT MINNEAPOLIS SURFACE WATERS AND SEWERS 48 HOURS PRIOR TO ANY EXCAVATION OR CONSTRUCTION RELATED TO OR IN THE LOCATION OF THE PROPOSED STORMWATER MANAGEMENT BMP (CONTACT PAUL CHELLSEN, 673-2406 OR PAUL.CHELLSEN@MINNEAPOOLISMN.GOV)

12. UPON THE PROJECT'S COMPLETION THE GENERAL CONTRACTOR, PROPERTY OWNER OR RESPONSIBLE PARTY SHALL PROVIDE TO THE DEPARTMENT OF PUBLIC WORKS A FINAL STORMWATER MANAGEMENT REPORT INCLUDING RECORD DRAWINGS. THIS REPORT WILL SERVE AS A MEANS OF VERIFICATION THAT THE INTENT OF THE APPROVED STORMWATER MANAGEMENT DESIGN HAS BEEN MET. THIS FINAL REPORT SHALL SUBSTANTIATE THAT ALL ASPECTS OF THE ORIGINAL DESIGN HAVE BEEN ADEQUATELY PROVIDED FOR BY THE CONSTRUCTION OF THE PROJECT.

13. PROPOSED PIPE MATERIALS:

STORM SEWER	ALUMINZED TYPE 2 CSP	72" DIAMETER
STORM SEWER	ALUMINIZED TYPE 2 CSP OR DUAL WALL HDPE	12" DIAMETER
STORM SEWER	RCP	12" DIAMETER
WATER SERVICE	DIP CLASS 53	8" DIAMETER
SANITARY SERVICE	VCP	8" DIAMETER

NORTH

SCALE IN FEET 0 20 40

BENCHMARKS

TOP NUT HYDRANT ALONG NORTHWEST SIDE OF 3RD AVE. N.,
ELEVATION = 841.21 (NGVD1929)

MINNEAPOLIS SURVEY MONUMENT:
CENTER OF 2ND AVE. N. AND 4TH ST. N.
ELEVATION = 848.98 (NGVD1929)

MGA DLR Group

© MGA 2013
© 2015 DLR Group inc., A Wisconsin Corporation. ALL RIGHTS RESERVED

LOUCKS ASSOCIATES
Planning • Civil Engineering • Land Surveying
Landscape Architecture • Environmental

7200 Hemlock Lane - Suite 300
Maple Grove, MN 55369
Telephone: (763) 424-5505
www.LoucksAssociates.com
Loucks Project #14019F

I hereby certify that this plan, specification or report was prepared by me or under my direct supervision and that I am a duly licensed Professional Engineer under the laws of the State of Minnesota.

Nicholas M. Mummel - PE

45861 License No.

02/27/15 Date

MICHAEL GREEN ARCHITECTURE
57 E CORDOVA STREET
VANCOUVER BC
CANADA V6A 1K3

DLR Group Inc.
520 Nicollet Mall, Suite 200
MINNEAPOLIS, MN 55402
USA

DATE	REV	DESCRIPTION
2015 03 05		CHECK SET
2015 02 27		LAND USE APPLICATION
2015 02 18		BID PACKAGE #1

MINNEAPOLIS T3
323 N. Washington Ave.
Minneapolis, MN 55401

40-14127-00

C4.2

UTILITY PLAN SOUTH

CORED OPENINGS SHALL BE BEVELLED TO ALLOW FOR MIS-ALIGNMENT.
FLEXIBLE SLEEVE SHALL BE NEOPRENE MATERIAL MEETING ASTM C-443.
VOIDS BETWEEN GASKET AND STRUCTURE SHALL BE FILLED USING TYPE N MORTAR AND FINISHED SMOOTH.

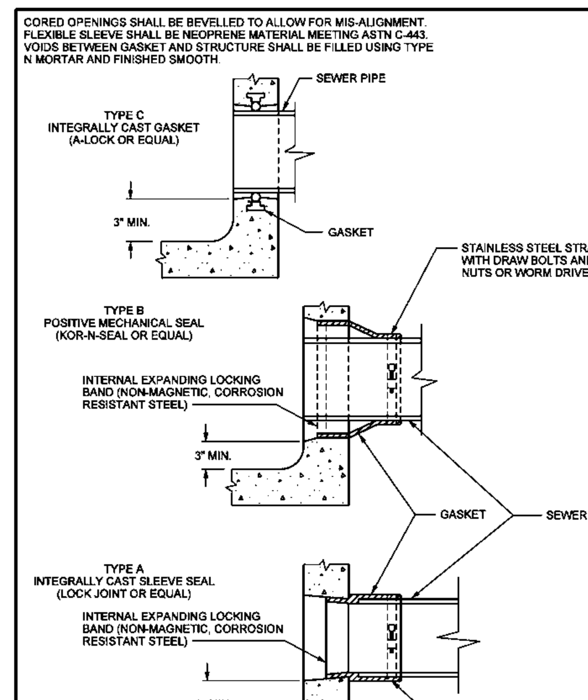

MNDOT SPEC. REF. 2503, 2506
MNDOT 4007C
NOT TO SCALE

MINNEAPOLIS DEPARTMENT OF PUBLIC WORKS | DRAWN: DCD DATE: 3/03 | APPROVED: HRS DATE: 12/06
WATERTIGHT PIPE CONNECTION
STANDARD PLATE NO. SEWR-3001

EROSION AND SEDIMENT CONTROL NOTES

INSTALL PERIMETER EROSION CONTROLS AS INDICATED IN PLANS PRIOR TO START OF WORK. HAY BALES ARE NOT ALLOWED AS EROSION & SEDIMENT CONTROL DEVICE IN MINNEAPOLIS.

ESTABLISH ROCK CONSTRUCTION ENTRANCES PRIOR TO BEGINNING LAND DISTURBING ACTIVITIES. 1 1/2" - 3" WASHED AGGREGATE IS RECOMMENDED FOR ROCK ENTRANCES. A GEOTEXTILE FABRIC IS REQUIRED.

REMOVE ALL SOILS AND SEDIMENTS DEPOSITED ONTO PUBLIC AND/OR PRIVATE PAVEMENT AREAS WITHIN 24 HOURS OF DEPOSITION. REMOVAL OF TRACKING MATERIALS SHALL BE COMPLETED AT THE END OF EACH WORK DAY WHEN TRACKING OCCURS. SWEEPING MAY BE ORDERED AT ANY TIME IF CONDITIONS WARRANT. SWEEPING SHALL BE MAINTAINED THROUGHOUT THE DURATION OF CONSTRUCTION AND IN SUCH A MANNER TO PREVENT DUST BEING BLOWN TO ADJACENT PROPERTIES.

INSTALL INLET PROTECTION IN ALL DOWNSTREAM CATCH BASINS WHICH RECEIVE RUNOFF FROM THE DISTURBED AREA. CATCH BASIN INSERTS ARE REQUIRED AT ALL LOCATIONS NOT WITHIN THE DISTURBED AREA WHICH RECEIVE RUNOFF (MNDOT TYPE C INLET PROTECTION). NOTE HAY BALES AND SILT FENCE WRAPPED GRATES ARE NOT EFFECTIVE AND ARE NOT APPROVED FOR USE AS INLET PROTECTION DEVICES.

LOCATE ALL SOIL AND DIRT PILES NO LESS THAN 25 FEET FROM ANY PUBLIC OR PRIVATE ROADWAY OR DRAINAGE CHANNEL. ALL STOCK PILES THAT REMAIN IN PLACE FOR 7 DAYS OR MORE SHALL BE STABILIZED BY MULCHING, VEGETATIVE COVER, TARPING OR OTHER MEANS. TEMPORARY STOCK PILES LOCATED ON PAVED SURFACES MUST BE AT LEAST 2 FEET OR MORE AWAY FROM THE DRAINAGE/GUTTER LINE AND SHALL BE COVERED IF REMAINING MORE THAN 24 HOURS.

MAINTAIN ALL TEMPORARY EROSION CONTROL DEVICES IN PLACE UNTIL THE CONTRIBUTING DRAINAGE AREA HAS BEEN STABILIZED. INSPECT TEMPORARY EROSION AND SEDIMENT CONTROL DEVICES ON A WEEKLY BASIS AND REPLACE DETERIORATED, DAMAGED OR ROTTED EROSION CONTROL DEVICES IMMEDIATELY.

MAINTENANCE OF EROSION AND SEDIMENT CONTROL DEVICES SHALL BE PERFORMED WHENEVER THE DEVICE IS 30% FULL. FAILURE TO MAINTAIN EROSION CONTROL DEVICES MAY LEAD TO FURTHER ENFORCEMENT ACTION. WEEKLY INSPECTIONS REQUIRED AND AFTER EACH 1/2" OR MORE RAIN EVENT WITHIN 24 HRS.

READY MIXED CONCRETE AND BATCH PLANT WASHOUTS PROHIBITED WITHIN THE PUBLIC RIGHT OF WAY. DESIGNATE CONCRETE WASHOUT AND MIXING LOCATIONS IN THE EROSION CONTROL PLANS. UNDER NO CIRCUMSTANCES MAY WASHOUT WATER DRAIN ONTO THE PUBLIC RIGHT OF WAY OR INTO THE PUBLIC STORM DRAIN.

TEMPORARILY OR PERMANENTLY STABILIZE ALL DENUDED AREAS WHICH HAVE BEEN FINISH GRADED WITHIN 7-14 DAYS (SLOPE DEPENDENT). USE SEEDING AND MULCHING, EROSION CONTROL MATTING AND/OR SODDING WITH TEMPORARY STAKING IN GREEN SPACE AREAS. USE EARLY APPLICATION OF GRAVEL BASE FOR AREAS DESIGNATED FOR PAVED SURFACING.

REMOVE ALL TEMPORARY SYNTHETIC, STRUCTURAL AND NON-BIODEGRADABLE EROSION AND SEDIMENT CONTROL AFTER THE SITE HAS UNDERGONE FINAL STABILIZATION AND PERMANENT VEGETATION HAS BEEN ESTABLISHED, MINIMUM VEGETATION COVER OF 70% REQUIRED. ALL TEMPORARY EROSION AND SEDIMENT CONTROL DEVICES SHALL BE MAINTAINED UNTIL THE SITE HAS 70% ESTABLISHED VEGETATIVE COVER AND ALL PAVED AREAS HAVE BEEN STABILIZED WITH THE SELECTED PAVEMENT TYPE.

ADDITIONAL EROSION CONTROL MAY BE REQUIRED BY OTHER PERMITTING AGENCIES, IT IS THE RESPONSIBILITY OF THE PROJECT ENGINEER TO VERIFY THAT THE CITY AND ALL OTHER AGENCY REQUIREMENTS ARE MET.

MINNEAPOLIS CUSTOM
MNDOT SPEC. REF. 2573
NOT TO SCALE

MINNEAPOLIS DEPARTMENT OF PUBLIC WORKS | DRAWN: DCD DATE: 8/06 | APPROVED: HRS DATE: 3/07
EROSION CONTROL NOTES
STANDARD PLATE NO. SEWR-8007

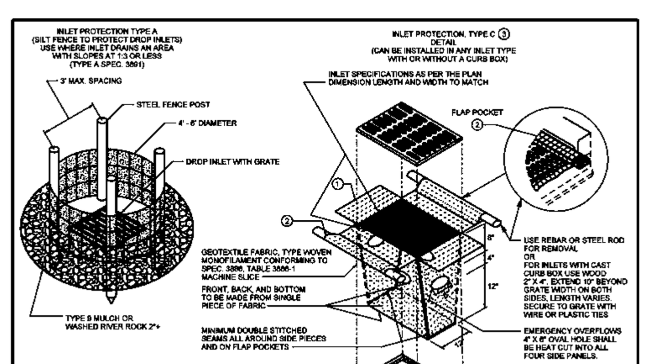

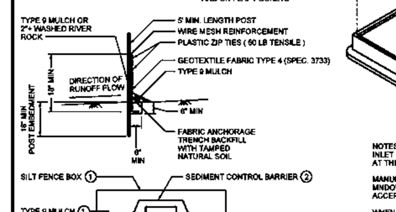

NOTES:
THE SEDIMENT CONTROL BARRIER SHALL BE A METAL OR PLASTIC/POLYETHELENE RISER SIZED TO FIT INSIDE THE CATCH BASIN/MANHOLE; HAVE PERFORATIONS TO ALLOW FOR WATER INFILTRATION; HAVE AN OVERFLOW OPENING, FLANGES AND A LID/COVER.

① USE INLET PROTECTION TYPE A OR TYPE 9 MULCH, AS DIRECTED BY THE ENGINEER.
② PAID FOR AS SEDIMENT CONTROL BARRIER.

NOTES:
INLET PROTECTION DEVICES SHALL BE MAINTAINED OR REPLACED AT THE DIRECTION OF THE ENGINEER.

MANUFACTURED ALTERNATIVES APPROVED AND LISTED ON THE MNDOT DEPARTMENT'S EROSION CONTROL PRODUCT ACCEPTABILITY LIST MAY BE SUBSTITUTED.

WHEN REMOVING OR MAINTAINING INLET PROTECTION, CARE SHALL BE TAKEN SO THAT THE SEDIMENT TRAPPED ON THE GEOTEXTILE FABRIC DOES NOT FALL INTO THE INLET. ANY MATERIAL FALLING INTO THE INLET SHALL BE REMOVED IMMEDIATELY.

① FINISHED SIZE, INCLUDING POCKETS WHERE REQUIRED, SHALL EXTEND A MINIMUM OF 10" AROUND THE PERIMETER TO FACILITATE MAINTENANCE OR REMOVAL.
② FLAP POCKETS SHALL BE LARGE ENOUGH TO ACCEPT WOOD 2" X 4".
③ INSTALLATION NOTES:
DO NOT INSTALL PROTECTION IN INLETS SHALLOWER THAN 30", MEASURED FROM THE BOTTOM OF THE INLET TO THE TOP OF THE GRATE.

TRIM EXCESS FABRIC IN THE FLOW LINE TO WITHIN 3" OF THE GRATE.

THE INSTALLED BAG SHALL HAVE A MINIMUM SIDE CLEARANCE, MAXIMUM OF 4" FROM THE BOTTOM OF THE BAG, BETWEEN THE INLET WALLS AND THE BAG, MEASURED AT THE BOTTOM OF THE OVERFLOW HOLES, OF 3". WHERE NECESSARY THE CONTRACTOR SHALL CLINCH THE BAG, USING PLASTIC ZIP TIES, TO ACHIEVE THE 3" CLEARANCE. THE TIES SHALL BE PLACED AT A

REFERENCES:
MNDOT DRAFT PLATES

MINNEAPOLIS CUSTOM
MNDOT SPEC. REF. 3891
NOT TO SCALE

MINNEAPOLIS DEPARTMENT OF PUBLIC WORKS | DRAWN: DCD DATE: 1/05 | APPROVED: HRS DATE: 4/07
INLET PROTECTION TYPE A & C
STANDARD PLATE NO. SEWR-8003

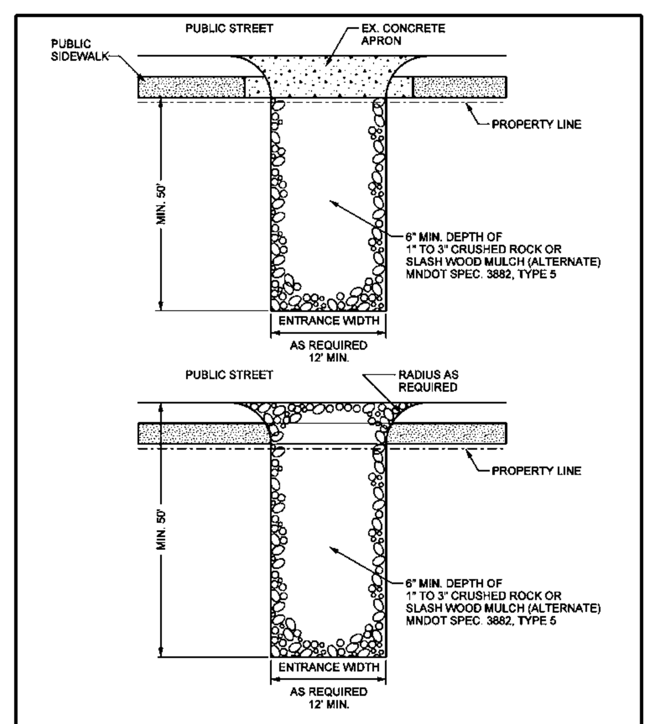

REMOVE TRACKED SEDIMENTS FROM PAVED SURFACES WITHIN 24 HOURS OF DEPOSITION PICK UP OR VACUUM SWEEPER REQUIRED

REFERENCES:
MINNESOTA URBAN SMALL SITES BMP MANUAL, PP. 3-69 TO 3-73
MNDOT EROSION CONTROL HANDBOOK

MINNEAPOLIS CUSTOM
MNDOT SPEC. REF. 2573
NOT TO SCALE

MINNEAPOLIS DEPARTMENT OF PUBLIC WORKS | DRAWN: DCD DATE: 3/07 | APPROVED: HRS DATE: 4/07
SEDIMENT CONTROL – ROCK ENTRANCE
STANDARD PLATE NO. SEWR-8002

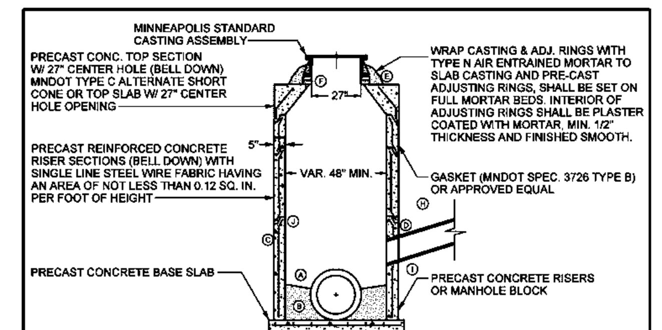

FOLLOW MNDOT 2451.3-C - FOUNDATION PREPARATION AND COMPACTION REQUIREMENTS OF MNDOT 2105.3 F1 - SPECIFIED DENSITY METHOD (100% COMPACTION REQUIREMENTS OF STANDARD PROCTOR)
MNDOT DESIGN F, MODIFIED
CONTINUOUS INSIDE DIAMETER
USE MINNEAPOLIS SHORT CONE SECTION (MNDOT TYPE C ALTERNATE) OR TOP SLAB ONLY

Ⓐ BOTTOM TO BE SHAPED 2/3 OF PIPE DIAMETER WITH POURED CONCRETE TO PROVIDE EFFICIENT FLOW.
Ⓑ WHEN THE INVERT OF THE INLET PIPE IS BELOW THE SPRING LINE OF THE MAIN, THEN PROVIDE CONCRETE "POWER FLOWS" FOR POSITIVE DOWN STREAM FLOW THROUGH MANHOLE.
Ⓒ PRE-CAST CONCRETE MANHOLE SECTIONS.
Ⓓ FILL AROUND INLET PIPE AND LIFTING HOLES WITH CEMENT MORTAR, TYPE N AIR ENTRAINED, FINISH SMOOTH AS NECESSARY. ALL PIPES CONNECTING TO MH'S SHALL BE TRIMMED FLUSH TO THE INTERIOR WALL OF THE MH STRUCTURE.
Ⓔ MANHOLE CASTING SHALL BE SET ON A FULL MORTAR BED, TYPE N AIR ENTRAINED
Ⓕ THE NUMBER OF CONCRETE ADJUSTING RINGS SHALL BE LIMITED TO PROVIDE A MAXIMUM THICKNESS OF 8" INCLUDING MORTAR, TYPE N AIR ENTRAINED WITH A MINIMUM OF 1 - 2" ADJUSTING RING. ALL ADJUSTING RINGS TO BE NEATLY SEALED WITH CONCRETE GROUT, TYPE N AIR ENTRAINED, ON THE INTERIOR OF THE STRUCTURE. MINIMUM OF 2" OF ADJUSTING RINGS & MORTAR TYPE N AIR ENTRAINED REQUIRED. ALL WOOD AND NON-CONCRETE ADJUSTING DEVICES SHALL BE REMOVED.
Ⓖ CONCRETE MANHOLE BLOCK MAY BE USED WITH THE APPROVAL OF CITY ENGINEER. INTERIOR & EXTERIOR OF BLOCK WORK SHALL BE MORTAR PLASTERED, TYPE N AIR ENTRAINED, TO A SMOOTH FINISH, MIN. 1/2" THICKNESS.
Ⓗ SUITABLE BACKFILL UNIFORMLY DISTRIBUTED IN 8" OR LESS LAYERS AND COMPACTED BEFORE SUCCESSIVE LAYERS ARE ADDED. MNDOT 2451.3 D - BACKFILLING EXCAVATIONS, COMPACTION IN ACCORDANCE WITH MNDOT 2105.3 F1 - SPECIFIED DENSITY METHOD.
Ⓙ FILL ANNULAR SPACE ON BELL END OF 1ST RISER SECTION WITH BRICK AND MORTAR, TYPE N AIR ENTRAINED, IF REQUIRED.
Ⓘ WATER STOP REQUIRED ON PVC, DIP, VCP, HDPE, HOBAS, PPP.

MINNEAPOLIS SHORT CONE SECTION SHALL BE USED UNLESS OTHERWISE SPECIFIED IN THE PLANS AND PLASTER COATED WITH TYPE N AIR ENTRAINED MORTAR (TO A SMOOTH FINISH).
ALL PRE-CAST MH RISER SECTIONS SHALL BE CONFIGURED TO PLACE THE BELL END DOWN.

MINNEAPOLIS CUSTOM
MNDOT SPEC. REF. 2506
MODIFIED MNDOT 4000J, 4005L
NOT TO SCALE

MINNEAPOLIS DEPARTMENT OF PUBLIC WORKS | DRAWN: DCD DATE: 12/09 | APPROVED: HRS DATE: 12/09
TYPICAL MANHOLE CONSTRUCTION
STANDARD PLATE NO. SEWR-1000-R1

SPECIFICATION NOTES:
ALL P.V.C. PIPE SHALL MEET OR EXCEED ASTM D 1784 AND ASTM D 2241, AASHTO M 278, CLASS PF 50, P.V.C., SDR- 26: ASTM D 3034, TYPE PSM P.V.C. SEWER PIPE, SDR 26 ASTM 758, SMOOTH WALL P.V.C., TYPE PS 46.
ALL SANITARY CONNECTIONS LESS THAN 10" DIAMETER SHALL BE SCH 40 AND CLEANED WITH PROPER PRIMER AS DEFINED IN THE RESPECTIVE ASTM SPECIFICATION FOR SOLVENT JOINTS AND ALL JOINTS SHALL BE SOLVENT CEMENTED JOINTS WITH PROPER ASTM APPROVED CEMENTS.
ALL SANITARY CONNECTIONS 10" DIAMETER OR GREATER SHALL BE SDR-26 OR GREATER WITH COMPRESSION FITTINGS MEETING ASTM STANDARDS.
ALL MAINLINE SANITARY SEWERS SHALL BE VITRIFIED CLAY PIPE (VCP) UNLESS APPROVED BY CITY ENGINEER TO SUBSTITUTE PVC. SANITARY MAINS CONSTRUCTED OF PVC MATERIALS SHALL BE SDR-26 OR GREATER.

STORM DRAIN ONLY
SDR-35 MAY BE SPECIFIED FOR CITY CB RUNS ONLY, AT THE DISCRETION OF THE CITY PROJECT ENGINEER
ALL STORM DRAIN MAIN LINES SHALL BE REINFORCED CONCRETE MATERIALS WHERE POSSIBLE.
PVC STORM DRAINS SHALL BE PRE APPROVED BY THE SEWER MAINTENANCE ENGINEER.

ALL DIMENSIONS BELOW ARE VARIABLE BY MANUFACTURER
ALL PVC SHALL BE CONSTRUCTED FROM NEW MATERIALS

NOMINAL PIPE SIZE	P.V.C. PIPING SYSTEM O.D.	AVERAGE I.D.			WALL THICKNESS			WEIGHT			MAX W.P. (PSI)		
		40	80	SDR 26	40	80	SDR 26	40	80	SDR 26	40	80	SDR 26
4"	4.500	3.998	3.786	4.134	0.237	0.337	0.173	2.006	2.782	1.569	220	320	160
5"	5.563	5.017	4.767	5.108	0.258	0.375	0.214	2.726	3.867	2.411	190	290	160
6"	6.625	6.031	5.709	6.084	0.280	0.432	0.255	3.535	5.313	3.414	180	280	160
8"	8.625	7.943	7.565	7.921	0.322	0.500	0.332	5.305	8.058	5.784	160	250	160
10"	10.750	9.976	9.492	9.874	0.365	0.593	0.413	7.532	11.956	8.971	140	230	160
12"	12.750	11.890	11.294	11.711	0.406	0.687	0.490	9.949	16.437	12.620	130	230	160
14"	14.000	13.072	12.410	12.860	0.437	0.750	0.538	11.810	19.790	15.205	130	220	160
16"	16.000	14.940	14.214	14.696	0.500	0.843	0.615	15.416	25.430	19.877	130	220	160
18"	18.000	16.809	6.014	16.533	0.562	0.937	0.692	20.112	31.830	25.156	130	220	160
20"	20.000	18.743	17.814	18.370	0.593	1.031	0.769	23.624	40.091	31.057	120	220	160
24"	24.000	22.544	21.418	22.043	0.687	1.218	0.923	32.873	56.882	44.744	120	210	160

DIMENSIONS ARE IN INCHES.
WEIGHTS ARE IN POUNDS PER FT.
MINIMUM COVER ON PIPE IS 18", LESS THAN 18" USE DUCTILE IRON PIPE CLASS 52 OR EQUIVELANT.
ALTERNATE PIPE MATERIAL FOR MAINLINE CONSTRUCTION.

MNDOT SPEC. REF. 3245
NOT TO SCALE

MINNEAPOLIS DEPARTMENT OF PUBLIC WORKS | DRAWN: DCD DATE: 12/02 | APPROVED: HRS DATE: 12/06
PVC PIPE STANDARDS
STANDARD PLATE NO. SEWR-4015

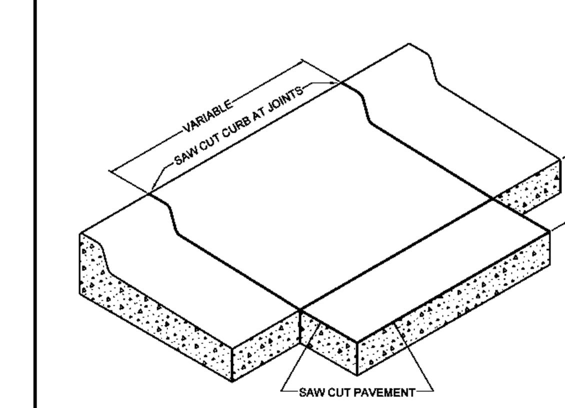

MINNEAPOLIS DEPARTMENT OF PUBLIC WORKS | DRAWN: JFC DATE: 9/10/07 | APPROVED: GAS DATE: 5/19/08
SAW CUT AT CURB AND GUTTER REMOVAL
STANDARD PLATE NO. ROAD-1010

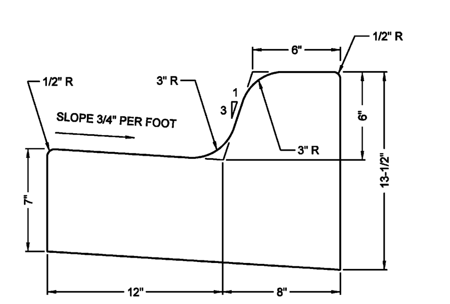

*SLOPE NOT TO EXCEED 1:20 AT CURB RAMPS

MINNEAPOLIS DEPARTMENT OF PUBLIC WORKS | DRAWN: JFC DATE: 4/1/08 | APPROVED: GAS DATE: 5/19/08
B612 CURB AND GUTTER
STANDARD PLATE NO. ROAD-1000

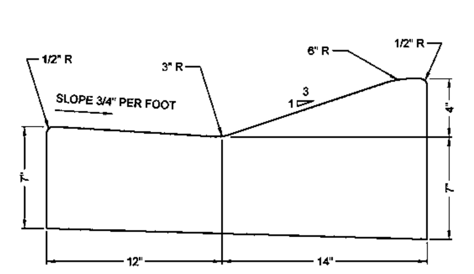

MINNEAPOLIS DEPARTMENT OF PUBLIC WORKS | DRAWN: JFC DATE: 9/10/07 | APPROVED: GAS DATE: 5/19/08
D-412 CURB AND GUTTER MODIFIED
STANDARD PLATE NO. ROAD-1007

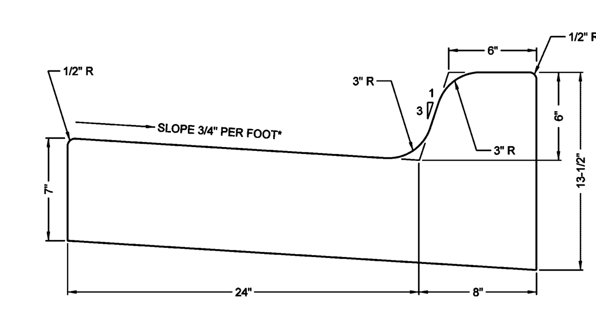

*SLOPE NOT TO EXCEED 1:20 AT CURB RAMPS

MINNEAPOLIS DEPARTMENT OF PUBLIC WORKS | DRAWN: JFC DATE: 9/10/07 | APPROVED: GAS DATE: 5/19/08
B-624 CURB AND GUTTER
STANDARD PLATE NO. ROAD-1003

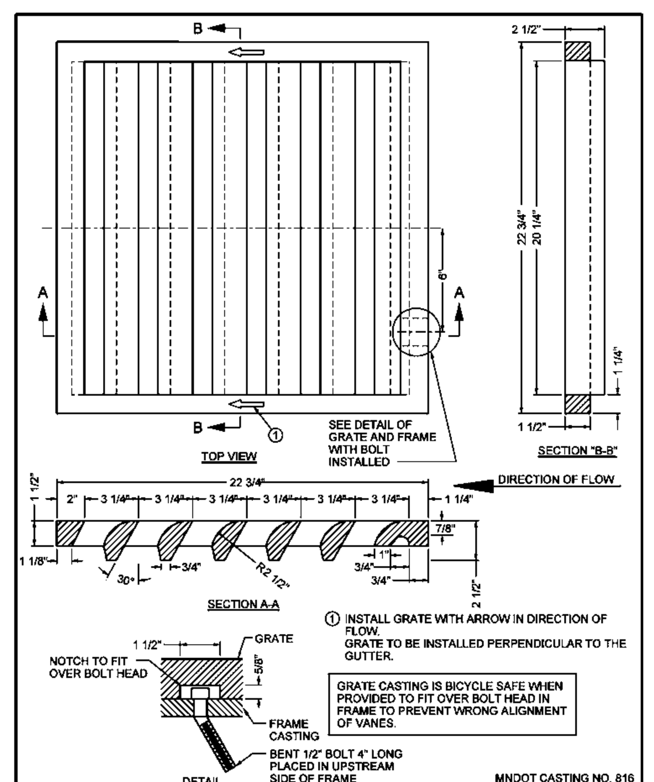

① INSTALL GRATE WITH ARROW IN DIRECTION OF FLOW.
GRATE TO BE INSTALLED PERPENDICULAR TO THE GUTTER.

GRATE CASTING IS BICYCLE SAFE WHEN PROVIDED TO FIT OVER BOLT HEAD IN FRAME TO PREVENT WRONG ALIGNMENT OF VANES.

NOTES:
MATERIAL: GRAY IRON ASTM A-48

MNDOT CASTING NO. 816
MNDOT SPEC. REF. 2506
MNDOT 4154B
NOT TO SCALE

MINNEAPOLIS DEPARTMENT OF PUBLIC WORKS | DRAWN: DCD DATE: 1/03 | APPROVED: HRS DATE: 12/06
CATCH BASIN GRATE TYPE "V"
STANDARD PLATE NO. SEWR-2008

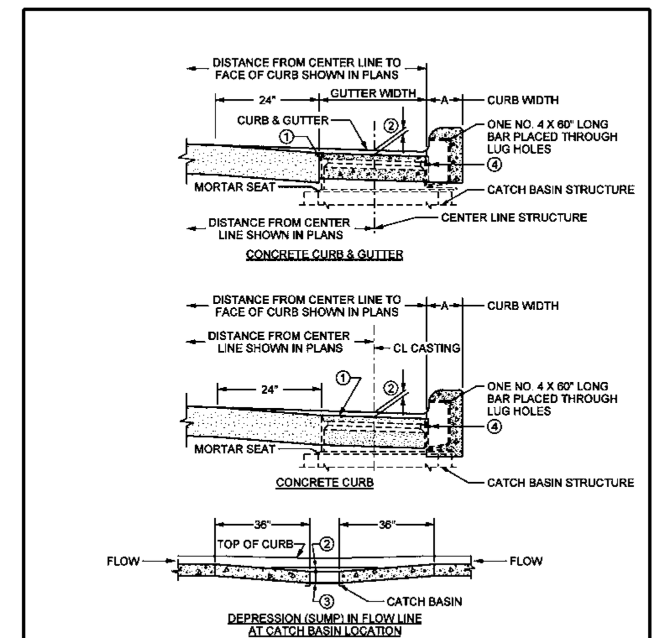

NOTES:
① CATCH BASIN CASTING.
② ON ALL APPLICATIONS USE 1-1/4" SUMP. SUMP SHALL BE MEASURED AT CENTER OF CASTING.
③ SAME THICKNESS AS ADJACENT PAVEMENT OR GUTTER.
④ CURB INLET CASTING SHALL BE FASTENED TEMPORARILY TO FRAME CASTING WITH 2 CAP SCREWS, DURING CURB CONSTRUCTION. CAP SCREWS MUST BE REMOVED AFTER CURB HAS HARDENED.

COMPENSATE FOR TILT BY VARYING THE DEPTH OF MORTAR SEAT.
ALL REINFORCEMENT REQUIRED IS INCIDENTAL, WITH NO DIRECT PAYMENT.
ALL REBARS ARE IN ENGLISH DESIGNATIONS.
ALL REBARS ARE GRADE 60

MNDOT SPEC. REF. 2506
MNDOT 7111J
NOT TO SCALE

MINNEAPOLIS DEPARTMENT OF PUBLIC WORKS | DRAWN: DCD DATE: 8/03 | APPROVED: HRS DATE: 12/06
CATCH BASIN INSTALLATION
STANDARD PLATE NO. SEWR-1009

MGA
DLR Group
© MGA2015
© 2015, DLR Group Inc., A Minnesota Corporation. ALL RIGHTS RESERVED

LOUCKS ASSOCIATES
Planning ▪ Civil Engineering ▪ Land Surveying
Landscape Architecture ▪ Environmental
7200 Hemlock Lane - Suite 300
Maple Grove, MN 55369
Telephone: (763) 424-5505
www.LoucksAssociates.com
Loucks Project #14019F

I hereby certify that this plan, specification or report was prepared by me or under my direct supervision and that I am a duly Licensed Professional Engineer under the laws of the State of Minnesota.

Nicholas M. Mannel - PE
45861 — 02/27/15
License No. — Date

MICHAEL GREEN ARCHITECTURE
57 E CORDOVA STREET
VANCOUVER BC
CANADA V6A 1K3

DLR Group Inc.
520 Nicollet Mall, Suite 200
MINNEAPOLIS, MN 55402
USA

DATE	REV	DESCRIPTION
2015 03 05		CHECK SET
2015 02 27		LAND USE APPLICATION
2015 02 18		BID PACKAGE #1

MINNEAPOLIS T3
323 N. Washington Ave.
Minneapolis, MN 55401

40-14127-00

C8.1

DETAIL SHEET

12' Heavy duty Municipal Core cast base w/ 4" deeply fluted non tapered shaft

Brand:	Capitol Series
Stock Number:	7832
msrp:	$1699
sale:	call
Base Diameter:	17"
Height:	12"
Pole Finish:	Powder Coat Finish
Colors:	Black
Dimensions:	19
Luminair Dims:	29 1/2
Post Material:	Fluted extruded aluminum 4
Globe Material:	opaque lexan lense - aluminum lantern
Lighting:	Standard Inc Socket Only
Optional:	HID , HPS or MH

Installation Instructions

Lights are to be installed onto a cement pad the depth of your local frost line. The base pad should be poured cylindricaly with a width of not less than 2" larger than diameter of base. 1/2" x 12" to 18" L-Shape bolts are necessary for installation (not provided, may obtain at your local hardware store) secure four (4) of these bolts, according to the template provided. Electrical conduit containing the main electrical wire should protrude through the center of this cement pad. Connect the base of the light to the cement pad using nuts, and connect the main electrical wire to the leads extending down from the socket assembly (standard) or the ballast/socket assembly (optional). Assembly is now complete.

Extended Product Description

HEAVY DUTY MUNICIPAL QUALITY CORE CAST BASE WITH 4" DEEPLY FLUTED TUBULAR NON TAPERED SHAFT

Diagrams

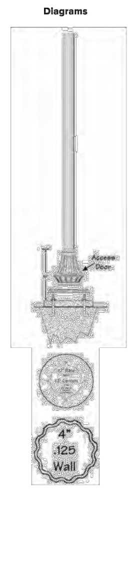

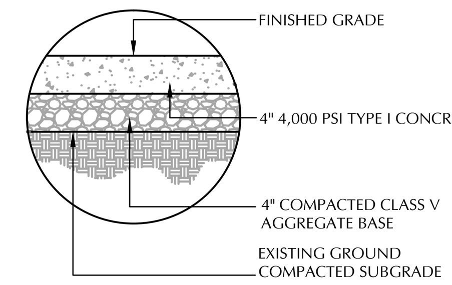

CONCRETE SIDEWALK

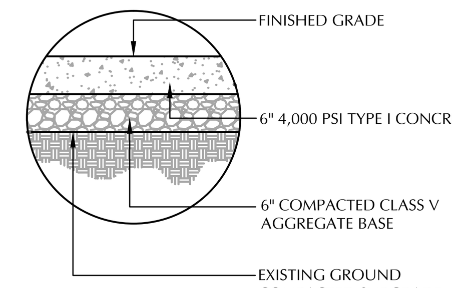

CONCRETE PAVEMENT

- / -- CONCRETE PAVEMENT SECTIONS
SCALE: N/A
-

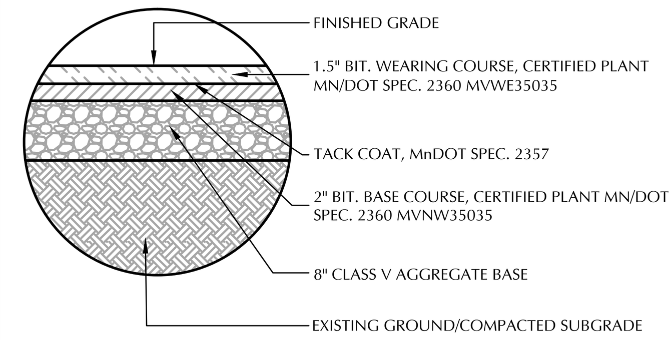

BIT. SECTION

- / -- TYP. BITUMINOUS PAVEMENT SECTION
SCALE: N/A
-

SIGN R7-8A

COLORS:
LEGEND AND BORDER - WHITE
WHITE SYMBOL ON BLUE BACKGROUND
BACKGROUND - BLUE

REDUCE SPACING 50%
SEE APPENDIX "E" FOR SYMBOL PROPORTIONS

NOTE: SIGNAGE REQUIREMENTS VARY: VERIFY ALL DIMENSIONS, COLOR, AND MOUNTING HEIGHTS, ETC. WITH LOCAL AND STATE AUTHORITIES.

- / -- HANDICAP SIGNS
SCALE: N/A
-

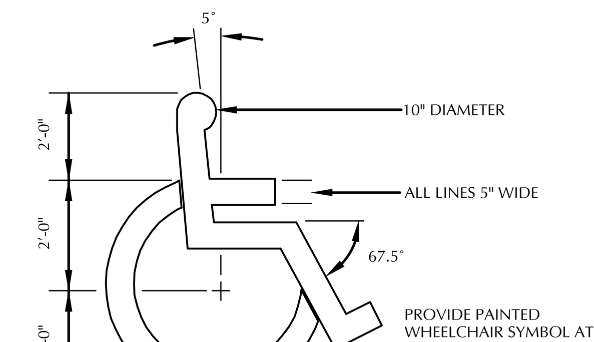

PROVIDE PAINTED WHEELCHAIR SYMBOL AT EACH DESIGNATED HANDICAP PARKING STALL. CENTER SYMBOL IN STALL.

- / -- WHEELCHAIR SYMBOL
SCALE: N/A
-

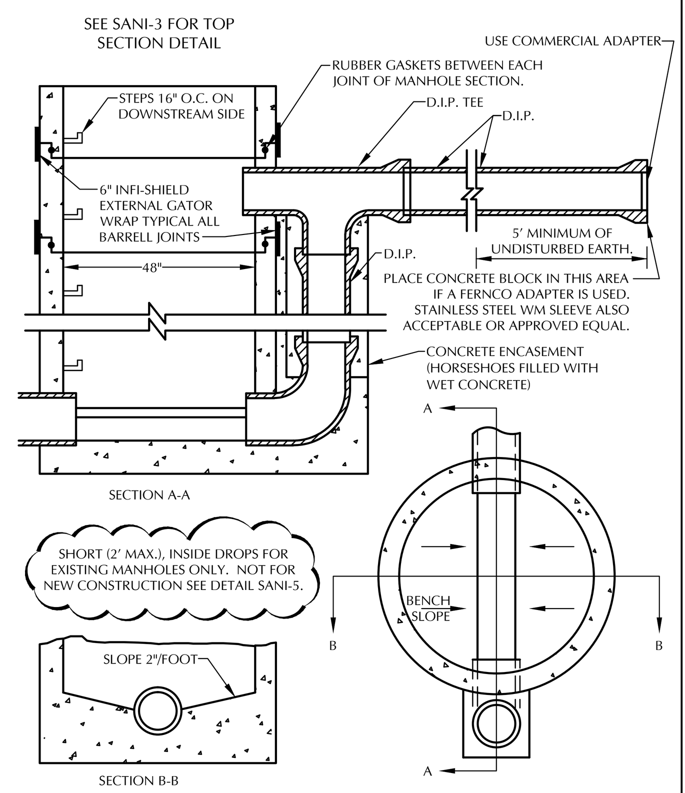

LOUCKS ASSOCIATES | STANDARD DROP MANHOLE #1 | LOUCKS PLATE NO. SANI-4 | DRAWN 12/2012

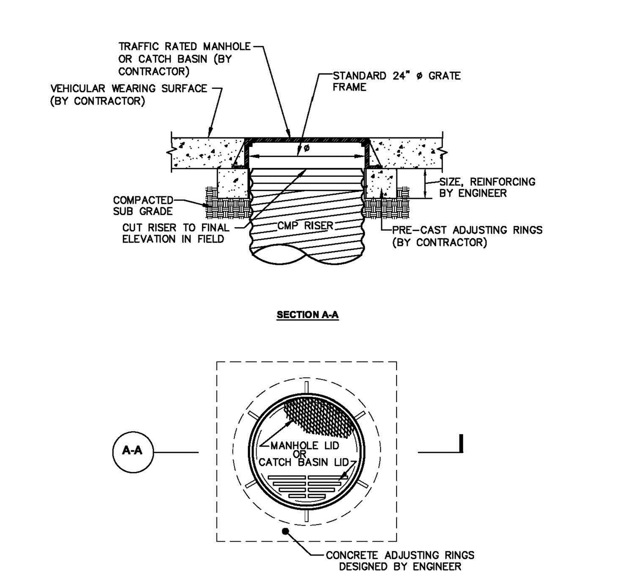

NOTES:
1. THE PRE-CAST ADJUSTING RINGS SHALL BE SIZED AND DESIGNED BY OTHERS SO THAT THE LOADS ARE TRANSMITTED TO THE SOIL, AND NOT THE RISER.
2. THE PRE-CAST ADJUSTING RINGS SHALL BE SIZED TO PROVIDE AN ADEQUATE BOTTOM AREA BASED ON THE ALLOWABLE BEARING CAPACITY OF THE SOIL.

H:\ACAD Data\ES Land Projects\Standard Details\Manhole Cap Detail With Pre-Cast Adjusting Rings.dwg 11/4/2004 2:48:38 PM EST

CONTECH CONSTRUCTION PRODUCTS INC. 1001 GROVE STREET, MIDDLETOWN, OH 45044 PH: 1.800.338.1122 FAX: 513.425.5993 © COPYRIGHT
THIS PRINT IS OWNED BY CONTECH CONSTRUCTION PRODUCTS INC. AND MUST BE RETURNED UPON REQUEST. NOT TO BE COPIED.
CONTECH ID# 0000
LAYOUT
MANHOLE CAP WITH PRE-CAST ADJUSTING RINGS INSTALLATION DETAILS
SCALE: N.T.S. DRAWN BY: JSM DATE: 11/4/04 REV. BY: DATE: SHEET: 1 of 1

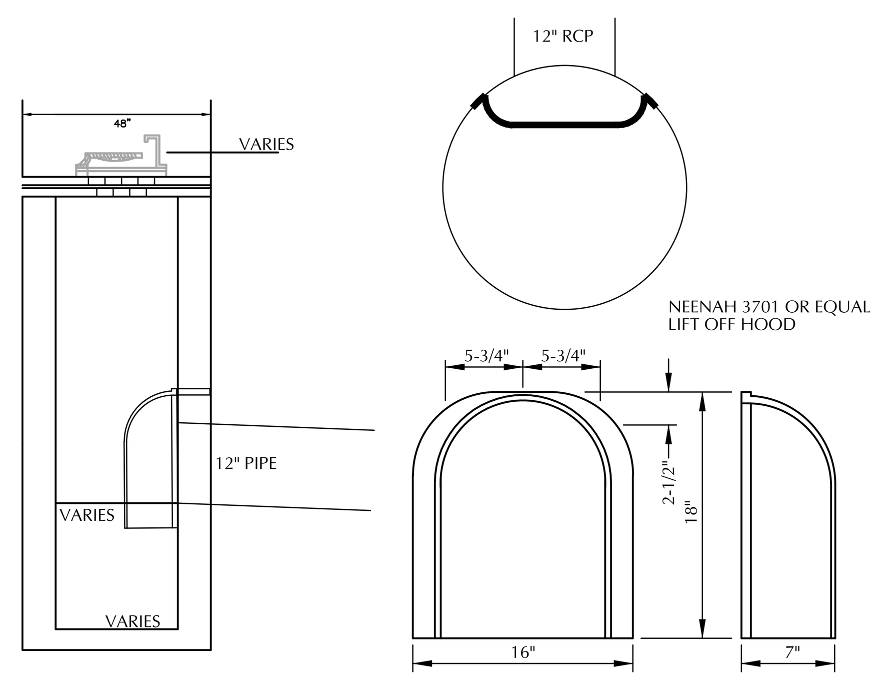

NOTE:
SEE STORM SEWER SCHEDULE
FOR STRUCTURES WITH SNOUT HOODS.

TYPICAL SNOUT HOOD DETAIL
NO SCALE

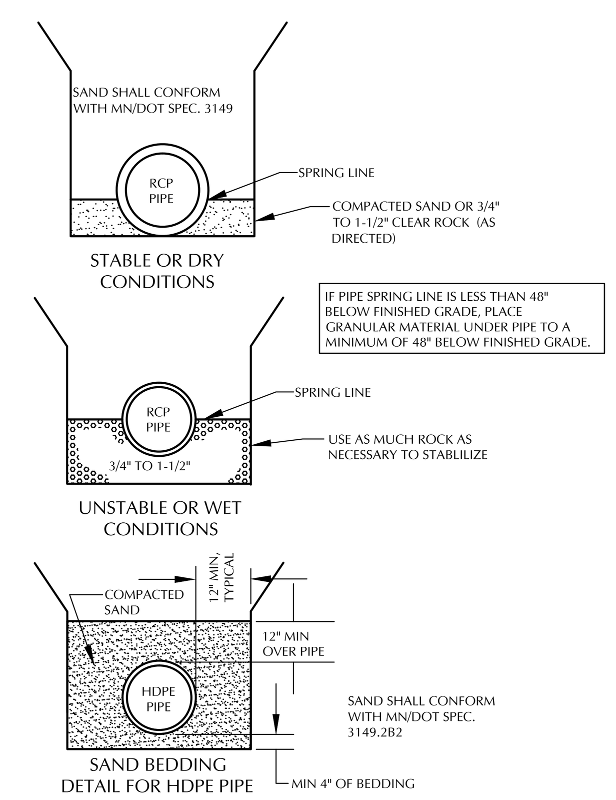

- / -- STORM SEWER PIPE BEDDING
SCALE: N/A
-

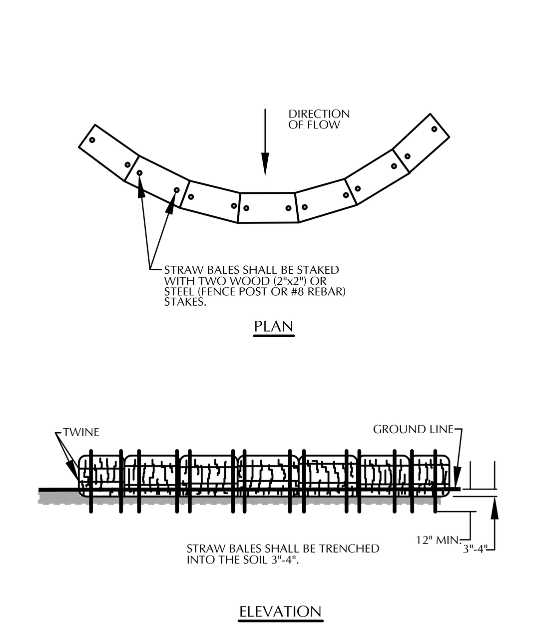

- / -- BIOLOG
SCALE: N/A
-

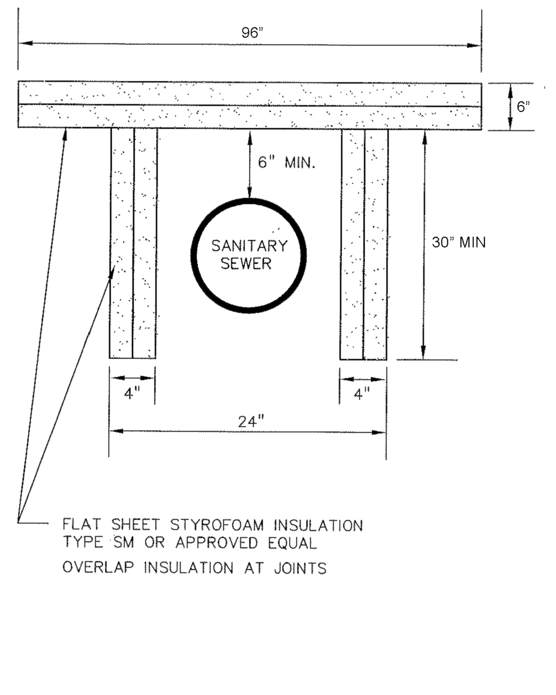

TYPICAL SHALLOW SANITARY SEWER AND WATERMAIN INSULATION

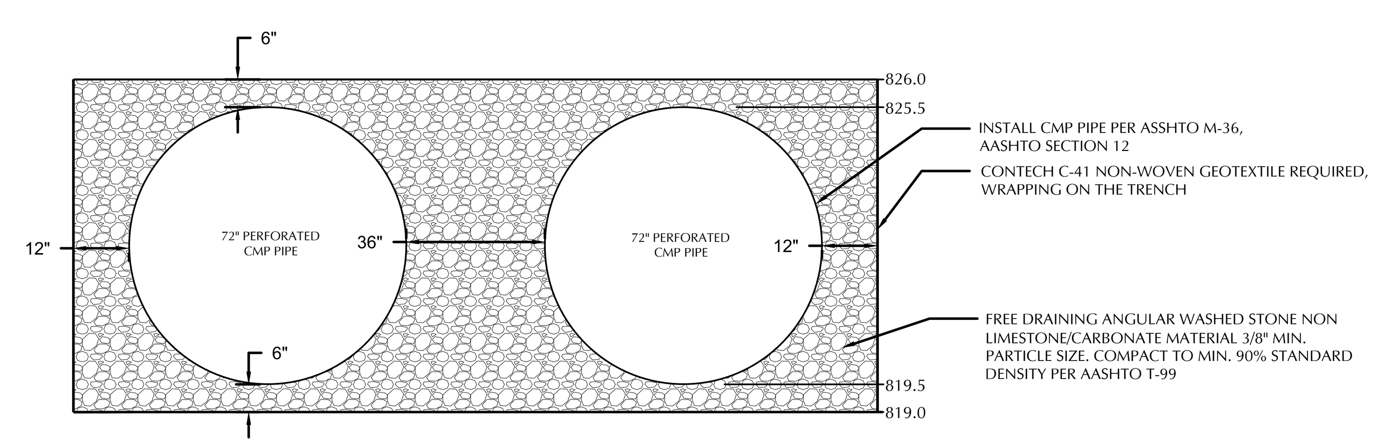

(CONTRACTOR TO PROVIDE SHOP DRAWINGS FOR REVIEW)

UNDERGROUND INFILTRATION SYSTEM 2 (SOUTH SYSTEM) TYPICAL SECTION
SCALE: N/A

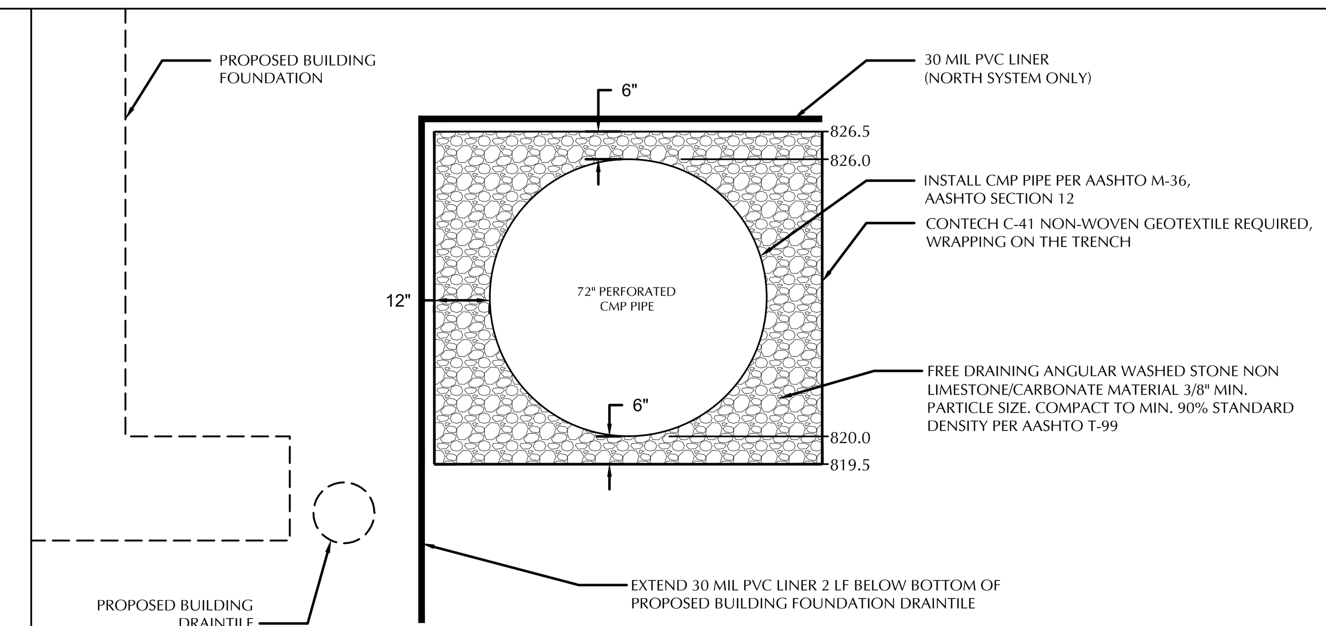

(CONTRACTOR TO PROVIDE SHOP DRAWINGS FOR REVIEW)

UNDERGROUND INFILTRATION SYSTEM 1 (NORTH SYSTEM) TYPICAL SECTION
SCALE: N/A

MGA DLR Group
© MGA 2015
© 2015, DLR Group Inc., A Minnesota Corporation. ALL RIGHTS RESERVED

LOUCKS ASSOCIATES
Planning • Civil Engineering • Land Surveying
Landscape Architecture • Environmental
7200 Hemlock Lane - Suite 300
Maple Grove, MN 55369
Telephone: (763) 424-5505
www.LoucksAssociates.com
Loucks Project #14019F

I hereby certify that this plan, specification or report was prepared by me or under my direct supervision and that I am a duly Licensed Professional Engineer under the laws of the State of Minnesota.
Nicholas M. Mannel - PE
45861 License No. 02/27/15 Date

MICHAEL GREEN ARCHITECTURE
57 E CORDOVA STREET
VANCOUVER BC
CANADA V6A 1K3

DLR Group Inc.
520 Nicollet Mall, Suite 200
MINNEAPOLIS, MN 55402
USA

DATE	REV	DESCRIPTION
2015 03 05		CHECK SET
2015 02 27		LAND USE APPLICATION
2015 02 18		BID PACKAGE #1

MINNEAPOLIS T3
323 N. Washington Ave.
Minneapolis, MN 55401

40-14127-00

C8.2

DETAIL SHEET

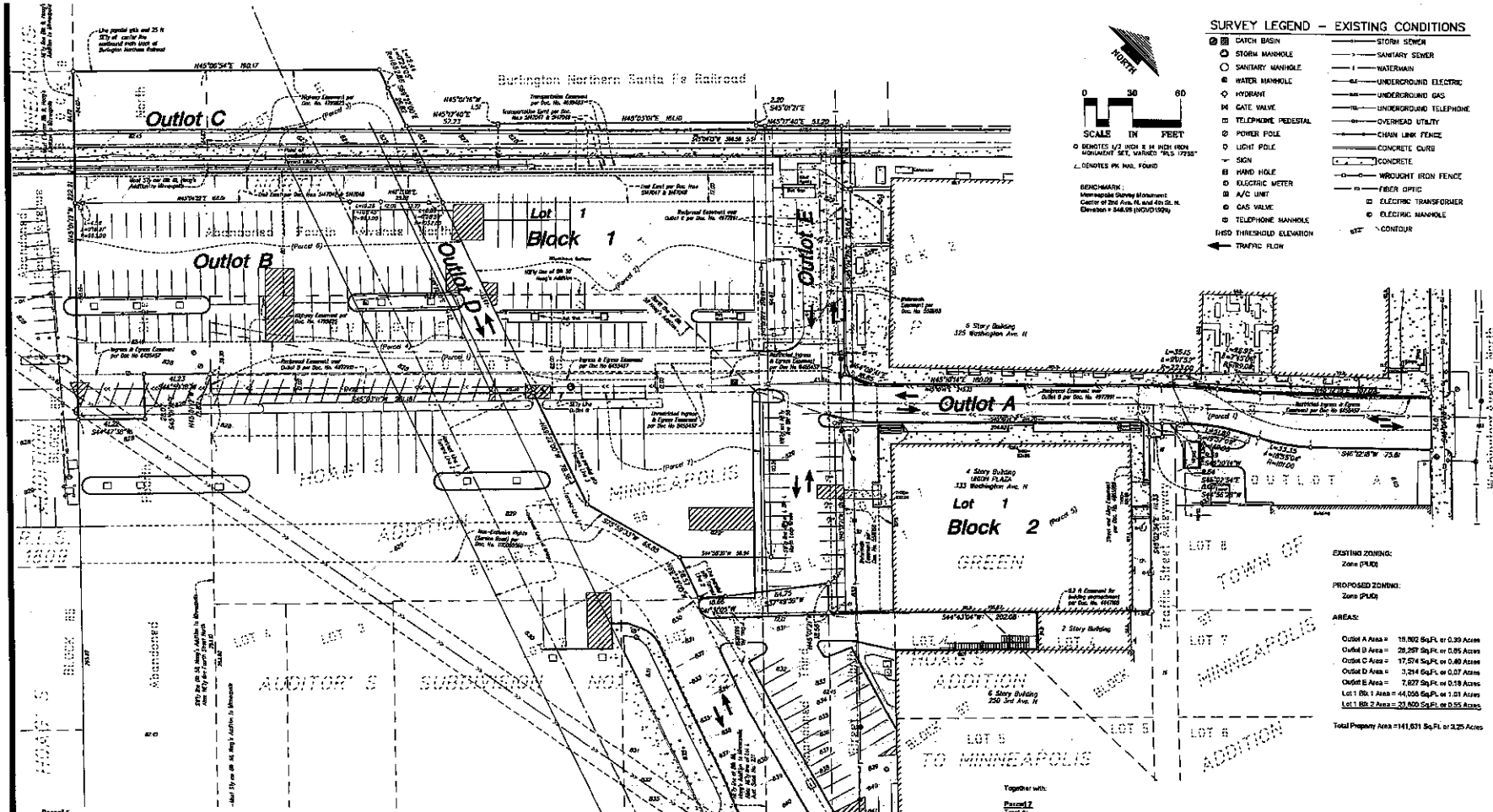

SURVEY LEGEND – EXISTING CONDITIONS

- CATCH BASIN
- STORM MANHOLE
- SANITARY MANHOLE
- WATER MANHOLE
- HYDRANT
- GATE VALVE
- TELEPHONE PEDESTAL
- POWER POLE
- LIGHT POLE
- SIGN
- HAND HOLE
- ELECTRIC METER
- A/C UNIT
- GAS VALVE
- TELEPHONE MANHOLE
- THSD THRESHOLD ELEVATION
- TRAFFIC FLOW
- STORM SEWER
- SANITARY SEWER
- WATERMAIN
- UNDERGROUND ELECTRIC
- UNDERGROUND GAS
- UNDERGROUND TELEPHONE
- OVERHEAD UTILITY
- CHAIN LINK FENCE
- CONCRETE CURB
- CONCRETE
- WROUGHT IRON FENCE
- FIBER OPTIC
- ELECTRIC TRANSFORMER
- ELECTRIC MANHOLE
- CONTOUR

○ DENOTES 1/2 INCH X 14 INCH IRON MONUMENT SET, MARKED "RLS 17355"

⌐ DENOTES PK NAIL FOUND

EXISTING ZONING:
Zone (PUD)

PROPOSED ZONING:
Zone (PUD)

AREAS:

Outlot A Area =	16,502 Sq.Ft. or 0.39 Acres
Outlot B Area =	28,297 Sq.Ft. or 0.65 Acres
Outlot C Area =	17,574 Sq.Ft. or 0.40 Acres
Outlot D Area =	3,214 Sq.Ft. or 0.07 Acres
Outlot E Area =	7,827 Sq.Ft. or 0.18 Acres
Lot 1 Blk 1 Area =	44,056 Sq.Ft. or 1.01 Acres
Lot 1 Blk 2 Area =	23,600 Sq.Ft. or 0.55 Acres

Total Property Area = 141,631 Sq.Ft. or 3.25 Acres

Parcel 6

That part of abandoned Fourth Avenue North which lies northeasterly of the northeasterly line of Fourth Street North and southerly of a line run parallel with and distant 57 feet northerly of Line 1 described as follows:

Line 1:

Beginning at the point of intersection of the centerline of Second Avenue North with the centerline of Third Street North; thence run northwesterly on the centerline of Third Street North for 10.43 feet; thence deflect to the left on a tangential curve having a radius of 818.51 feet and a delta angle of 24 degrees 20 minutes 39 seconds for 347.77 feet; thence tangent to said curve for 605.69 feet; thence deflect to the right on a tangential curve having a radius of 1909.80 feet and a delta angle of 24 degrees 20 minutes 00 seconds for 810.67 feet and there terminating.

And

That part of the southwesterly half of abandoned Fourth Street North which is adjacent to Blocks 9 and 65, Hoag's Addition to Minneapolis, Hennepin County, Minnesota, which lies northwesterly of the following described line: Beginning at a point on the northeasterly line of said Block 65 distant 265.57 feet northwesterly of the most easterly corner of said Block 65; thence northeasterly along an extension of a line drawn from the last described point to a point on the southwesterly line of said Block 65, distant 267.56 feet northwesterly from the most southerly corner of said Block 65 to the centerline of abandoned Fourth Street North and said line there terminating; and lying southeasterly of the following described line: Beginning at the point of intersection of the northeasterly line of said Block 9 and a line which is parallel with and 25 feet southeasterly of the centerline of the eastbound main track of the Burlington Northern Railroad, said point of beginning being 64.72 feet northeasterly of the most easterly corner of said Block 9; thence northeasterly along said line which is parallel with and 25 feet southeasterly of the centerline of the eastbound main track to a point on the southwesterly line of Block 10, Hoag's Addition to Minneapolis, distant 64.63 feet northwesterly of the most southerly corner thereof and said line there terminating.

And

That part of the northeasterly half of abandoned Fourth Street North which is adjacent to Blocks 10 and 58, Hoag's Addition to Minneapolis, Hennepin County, Minnesota, which lies northwesterly of the following described line: Beginning at a point on the southwesterly line of Block 58, Hoag's Addition to Minneapolis, said point distant 293.10 feet northwesterly of the most southerly corner of said Block 58; thence southwesterly along an extension of a line drawn from the last described point to a point on the northwesterly extension of the northeasterly line of said Block 58, distant 280.15 feet northwesterly from the most easterly corner of said Block 58 to the centerline of Fourth Street North and said line there terminating; and lying southeasterly of the following described line: Beginning at the point of intersection of the northeasterly line of said Block 9 and a line which is parallel with and 25 feet southeasterly of the centerline of the eastbound main track of the Burlington Northern Railroad, said point of beginning being 64.72 feet northeasterly of the most easterly corner of said Block 9; thence northeasterly along said line which is parallel with and 25 feet southeasterly of the centerline of the eastbound main track to a point on the southwesterly line of Block 10, Hoag's Addition to Minneapolis, distant 64.63 feet northwesterly of the most southerly corner thereof and said line there terminating.

(Abacad Property, Hennepin County, Minnesota)

Together with:

Parcel 7

Tract A:

That part of Block 58, Hoag's Addition to Minneapolis, described as beginning at a point on the Southwesterly line of said Block 58 distant 253.80 feet Northwesterly from the most Southerly corner of said Block 58; thence Northwesterly along said Southwesterly line a distance of 30.50 feet; thence Northeasterly to a point on the Northwesterly extension of the Northeasterly line of said Block 58 distant 280.15 feet Northwesterly from the most Easterly corner of said Block 58; thence Southeasterly along said extension and along said Northeasterly line a distance of 39.30 feet; thence Southwesterly to the point of beginning; except the Southeasterly 12 feet of the Northwesterly 62 feet of said Block 58, Hoag's Addition to Minneapolis.

Tract B:

That part of Block 58, Hoag's Addition to Minneapolis, lying southeasterly of a line drawn from a point on the southwesterly line of said Block 58 distant 253.6 feet northwesterly from the most southerly corner of said Block 58 to a point on the northeasterly line of said Block 58 distant 250.85 feet northwesterly from the most easterly corner of said Block 58, except Lots 1, 2, 3 and 4, Auditors Subdivision Number 221, Hennepin County, Minnesota;

which lies northeasterly of Line 1 described below;

Line 1:

Commencing at a point on Line 2 described below; distant 212.71 feet southeasterly of its point of termination; thence northeasterly at right angles to said Line 2 for 57 feet to the point of beginning of Line 1 to be described; thence southeasterly parallel with said Line 2 for 80 feet; thence northeasterly to a point distant 95 feet (measured at right angles) of a point on said Line 2, distant 347.71 feet southeasterly of its point of termination; thence southeasterly parallel with said Line 2 to an intersection with the southwesterly line of Tract B hereinbefore described and there terminating.

Line 2

Beginning at the point of intersection of the center line of Second Avenue North with the center line of Third Street North; thence northwesterly on the center line of Third Street North for 10.43 feet; thence deflect to the left on a tangential curve having a radius of 818.51 feet and a delta angle of 24 degrees 20 minutes 39 seconds for 347.77 feet; thence on tangent to said curve for 605.69 feet and there terminating.

(Torrens Property, Hennepin County, Minnesota)

Together with:

Parcels 1, 2, 3, 4 and 5

Outlots B, C, D, E and F and Lot 1, Block 1, North Loop Green, according to the recorded plat thereof, Hennepin County, Minnesota.

(Torrens Property)

Project Name:

North Loop Green
Second Addition
T3

Minneapolis, Minnesota

Owner/Developer:

Hines

90 South Seventh Street
Suite 130
Minneapolis, MN 55402

Professional Services:

LOHER ASSOCIATES

Planning • Civil Engineering • Land Surveying
Landscape Architecture • Environmental

7500 Flying Cloud Drive • Suite 100
Minneapolis, MN 55344
Telephone: (952) 934-2020
www.loherassociates.com

©2015

CADD Qualification:

CADD Engineering and Consultant by the firm of Loher Associates, Inc. shall be performed to the best of their ability, knowledge and judgment. Since CADD is a dynamic medium, the accuracy of information stored in CADD files shall be subject to the limitations of software, hardware, software or hardware upgrades, and the ability of each subsequent user to verify the accuracy of information produced or stored using the firm's CADD files.

S:\14019\MASTER\DWG\Prelim Plat 2nd Add

Revisions:

02-17-15	Original Issue
02-18-15	Add Traffic Arrows

Professional Signature:

I hereby certify that this plan, specification, or report was prepared by me or under my direct supervision and that I am a duly Licensed Professional Engineer under the laws of the State of Minnesota.

Nancy D. Nelson

Nancy D. Nelson, PE

17355 — 02-18-14
License No. — Date

Quality Control:

Reviewed by — Drawn by: TMB

HDN — Date: —

Vicinity Map:

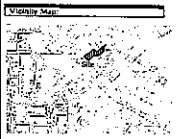

Sheet Title:

Preliminary Plat
North Loop Green
2nd Addition

Project No.:

14-019 G

Sheet No.:

Sheet 1 of 1

Plotted: 02/18/2015 2:24 PM W:\0014\14019\DWG\DETAIL\SURVEY

NORTH LOOP GREEN SECOND ADDITION

R.T. DOC. No. _____
C.R. DOC. No. _____

KNOW ALL PERSONS BY THESE PRESENTS: That Hines North Loop Green, LLC, a Delaware limited liability company, fee owner, of the following described property situated in the County of Hennepin, State of Minnesota, to wit

That part of abandoned Fourth Avenue North which lies northeasterly of the northeasterly line of Fourth Street North and southerly of a line run parallel with and distant 57 feet northerly of Line 1 described as follows:
Line 1:
Beginning at the point of intersection of the centerline of Second Avenue North with the centerline of Third Street North; thence run northwesterly on the centerline of Third Street North for 10.43 feet; thence deflect to the left on a tangential curve having a radius of 818.51 feet and a delta angle of 24 degrees 20 minutes 39 seconds for 347.77 feet; thence tangent to said curve for 605.89 feet; thence deflect to the right on a tangential curve having a radius of 1500.86 feet and a delta angle of 24 degrees 30 minutes 00 seconds for 616.67 feet and there terminating.

And
That part of the southwesterly half of abandoned Fourth Street North which is adjacent to Blocks 9 and 85, Hoag's Addition to Minneapolis, Hennepin County, Minnesota, which lies northwesterly of the following described line: Beginning at a point on the northeasterly line of said Block 85 distant 265.87 feet northwesterly of the most easterly corner of said Block 85; thence northeasterly along an extension of a line drawn from the last described point to a point on the southwesterly line of said Block 85, distant 287.56 feet northwesterly from the most southerly corner of said Block 85 to the centerline of abandoned Fourth Street North and said line there terminating; and lying southwesterly of the following described line: Beginning at the point of intersection of the northeasterly line of said Block 9 and a line which is parallel with and 25 feet southwesterly of the centerline of the eastbound main track of the Burlington Northern Railroad, said point of beginning being 64.72 feet northwesterly of the most easterly corner of said Block 9; thence northeasterly along said line which is parallel with and 25 feet southeasterly of the centerline of the eastbound main track in a point on the southwesterly line of Block 10, Hoag's Addition to Minneapolis, distant 64.63 feet northwesterly of the most southerly corner thereof and said line there terminating.

And
That part of the northeasterly half of abandoned Fourth Street North which is adjacent to Blocks 10 and 58, Hoag's Addition to Minneapolis, Hennepin County, Minnesota, which lies northwesterly of the following described line: Beginning at a point on the southwesterly line of Block 58, Hoag's Addition to Minneapolis, said point distant 290.10 feet northwesterly of the most southerly corner of said Block 58; thence southwesterly along an extension of a line drawn from the last described point to a point on the northwesterly extension of the northeasterly line of said Block 58, distant 290.15 feet northwesterly from the most easterly corner of said Block 58 to the centerline of Fourth Street North and said line there terminating; and lying southeasterly of the following described line: Beginning at the point of intersection of the northeasterly line of said Block 9 and a line which is parallel with and 25 feet southeasterly of the centerline of the eastbound main track of the Burlington Northern Railroad, said point of beginning being 64.72 feet northwesterly of the most easterly corner of said Block 9; thence northeasterly along said line which is parallel with and 25 feet southeasterly of the centerline of the eastbound main track to a point on the southwesterly line of Block 10, Hoag's Addition to Minneapolis, distant 64.63 feet northwesterly of the most southerly corner thereof and said line there terminating.
(Abstract Property)

Together with:

Outlots D, E and F and Lot 1, Block 1, North Loop Green, according to the recorded plat thereof.
(Torrens Property)

AND that North Loop Green Owners' Association, a Minnesota nonprofit corporation, fee owner, of the following described property situated in the County of Hennepin, State of Minnesota:

Outlots B, and C, North Loop Green, according to the recorded plat thereof.
(Torrens Property)

AND that Hines T3 Development LLC, a Delaware limited liability company, fee owner, of the following described property situated in the County of Hennepin, State of Minnesota:

Tract A:
That part of Block 58, Hoag's Addition to Minneapolis, described as beginning at a point on the Southwesterly line of said Block 58 distant 253.85 feet Northwesterly from the most Southerly corner of said Block 58; thence Northwestedly along said Southwesterly line a distance of 39.30 feet; thence Northwesterly to a point on the Northeasterly extension of the Northeasterly line of said Block 58 distant 290.15 feet Northwesterly from the most Easterly corner of said Block 58; thence Southeasterly along said extension and along said Northeasterly line a distance of 39.30 feet; thence Southwesterly to the point of beginning; except the Southeasterly 12 feet of the Northwesterly 63 feet of said Block 58, Hoag's Addition to Minneapolis.

Tract B:
That part of Block 58, Hoag's Addition to Minneapolis, lying southeasterly of a line drawn from a point on the southwesterly line of said Block 58 distant 253.8 feet northwesterly from the most southerly corner of said Block 58 to a point on the northeasterly line of said Block 58 distant 250.85 feet northwesterly from the most easterly corner of said Block 58, except Lots 1, 2, 3 and 4, Auditor's Subdivision Number 221, Hennepin County, Minnesota;

which lies northeasterly of Line 1 described below.

Line 1:
Commencing at a point on Line 2 described below, distant 212.71 feet southeasterly of its point of termination; thence northeasterly at right angles to said Line 2 for 57 feet to the point of beginning of Line 1 to be described; thence southeasterly parallel with said Line 2 for 90 feet; thence northeasterly to a point distant 95 feet (measured at right angles) of a point on said Line 2, distant 347.71 feet southeasterly of its point of termination; thence southeasterly parallel with said Line 2 to an intersection with the southeasterly line of Tract B hereinbefore described and there terminating.

Line 2:
Beginning at the point of intersection of the center line of Second Avenue North with the center line of Third Street North; thence northwesterly on the center line of Third Street North for 10.43 feet; thence deflect to the left on a tangential curve having a radius of 818.51 feet and a delta angle of 24 degrees 20 minutes 39 seconds for 347.77 feet; thence on tangent to said curve for 605.89 feet and there terminating.
(Torrens Property)

Have caused the same to be surveyed and platted as NORTH LOOP GREEN SECOND ADDITION.

In witness whereof said Hines North Loop Green, LLC, a Delaware limited liability company has caused these presents to be signed by its proper officer this _____ day of _____, 201____.

HINES NORTH LOOP GREEN, LLC

_____
David H. Spillman, Vice President

State of _____
County of _____

This instrument was acknowledged before me this _____ day of _____, 201____, by _____, Vice President of Hines Holding, Inc., the General Partner of Hines Interests Limited Partnership, the Managing Member of Hines North Loop Green LLC, a Delaware limited liability company on behalf of the company.

_____
(Signature)

_____
(Printed Name)
Notary Public _____ County, _____
my Commission Expires January 31, 201____

In witness whereof said North Loop Green Owners' Association, a Minnesota nonprofit corporation has caused these presents to be signed by its proper officer this _____ day of _____, 201____.

NORTH LOOP GREEN OWNERS' ASSOCIATION

_____
David H. Spillman, Vice President

State of _____
County of _____

This instrument was acknowledged before me this _____ day of _____, 201____, by _____, Vice President of Hines Holding, Inc., the General Partner of Hines Interests Limited Partnership, the Managing Member of Hines North Loop Green LLC, a Delaware limited liability company on behalf of the company.

_____
(Signature)

_____
(Printed Name)
Notary Public _____ County, _____
My Commission Expires January 31, 201____

In witness whereof said Hines T3 Development, LLC, a Delaware limited liability company has caused these presents to be signed by its proper officer this _____ day of _____, 201____.

HINES T3 DEVELOPMENT, LLC

_____
David H. Spillman, Vice President

State of _____
County of _____

This instrument was acknowledged before me this _____ day of _____, 201____, by _____, Vice President of Hines Holding, Inc., the General Partner of Hines Interests Limited Partnership, the Managing Member of Hines North Loop Green LLC, a Delaware limited liability company on behalf of the company.

_____
(Signature)

_____
(Printed Name)
Notary Public _____ County, _____
My Commission Expires January 31, 201____

SURVEYORS CERTIFICATION

I, Henry D. Nelson, do hereby certify that this plat was prepared by me or under my direct supervision; that I am a duly Licensed Land Surveyor in the State of Minnesota; that this plat is a correct representation of the boundary survey; that all mathematical data and labels are correctly designated on this plat; that all monuments depicted on this plat have been, or will be correctly set within one year; that all water boundaries and wet lands, as defined in Minnesota Statutes, Section 505.01, Subd. 3, as of the date of this certificate are shown and labeled on this plat; and all public ways are shown and labeled on this plat.

Dated this _____ day of _____, 201____

_____
Henry D. Nelson, Licensed Land Surveyor
Minnesota License No. 17255

State of Minnesota
County of Hennepin

This instrument was acknowledged before me this _____ day of _____, 201____ by Henry D. Nelson, a Licensed Land Surveyor.

_____
(Signature)

_____
(Printed Name)
Notary Public Hennepin County, Minnesota
My Commission Expires January 31, 201____

MINNEAPOLIS, MINNESOTA

I, The Secretary of the Planning Commission of the City of Minneapolis, Minnesota, do hereby certify that on this ___day of _____, 201____, the City of Minneapolis acting by and through its City Planning Commission duly approved the plat of NORTH LOOP GREEN SECOND ADDITION, and duly authorized such action of the Commission by its Secretary. The prescribed ten-day period for appeal has elapsed without receipt of an appeal, as provided by Title 22, Section 598.320 of the Minneapolis Code of Ordinances.

_____ Secretary of Planning Commission

MINNEAPOLIS, MINNESOTA

I hereby certify that this plat of NORTH LOOP GREEN SECOND ADDITION was approved by the City Planning Commission of the City of Minneapolis at a meeting thereof held this ___day of _____, 201____. If applicable, the written comments and recommendations of the Commissioner of Transportation and the County Highway Engineer have been received by the City or the prescribed 30 day period has elapsed without receipt of such comments and recommendations, as provided by Minn. Statutes, Section 505.03, Subd. 2.

City Clerk of Minneapolis, Minnesota

_____, Assistant City Clerk

RESIDENT AND REAL ESTATE SERVICES, Hennepin County, Minnesota

I hereby certify that taxes payable in 201____ and prior years have been paid for land described on this plat, dated this _____ day of _____, 201____.

Mark V. Chapin, Hennepin County Auditor

By _____, Deputy

SURVEY DIVISION, Hennepin County, Minnesota

Pursuant to MN. STAT. Sec. 383B.565 (1969) this plat has been approved this _____ day of _____, 201____.

Chris P. Mavis, Hennepin County Surveyor

By _____

REGISTRAR OF TITLES, Hennepin County, Minnesota

I hereby certify that the within plat of NORTH LOOP GREEN SECOND ADDITION was filed in this office this _____ day of _____, 201____, at _____o'clock__M.

Martin McCormick, Registrar of Titles

By _____ Deputy

COUNTY RECORDER, Hennepin County, Minnesota

I hereby certify that the within plat of NORTH LOOP GREEN SECOND ADDITION was recorded in this office this _____ day of _____, 201____, at _____o'clock__M.

Martin McCormick, County Recorder

By _____ Deputy

LOUCKS ASSOCIATES

NORTH LOOP GREEN SECOND ADDITION

R.T. DOC. No. _____
C.R. DOC. No. _____

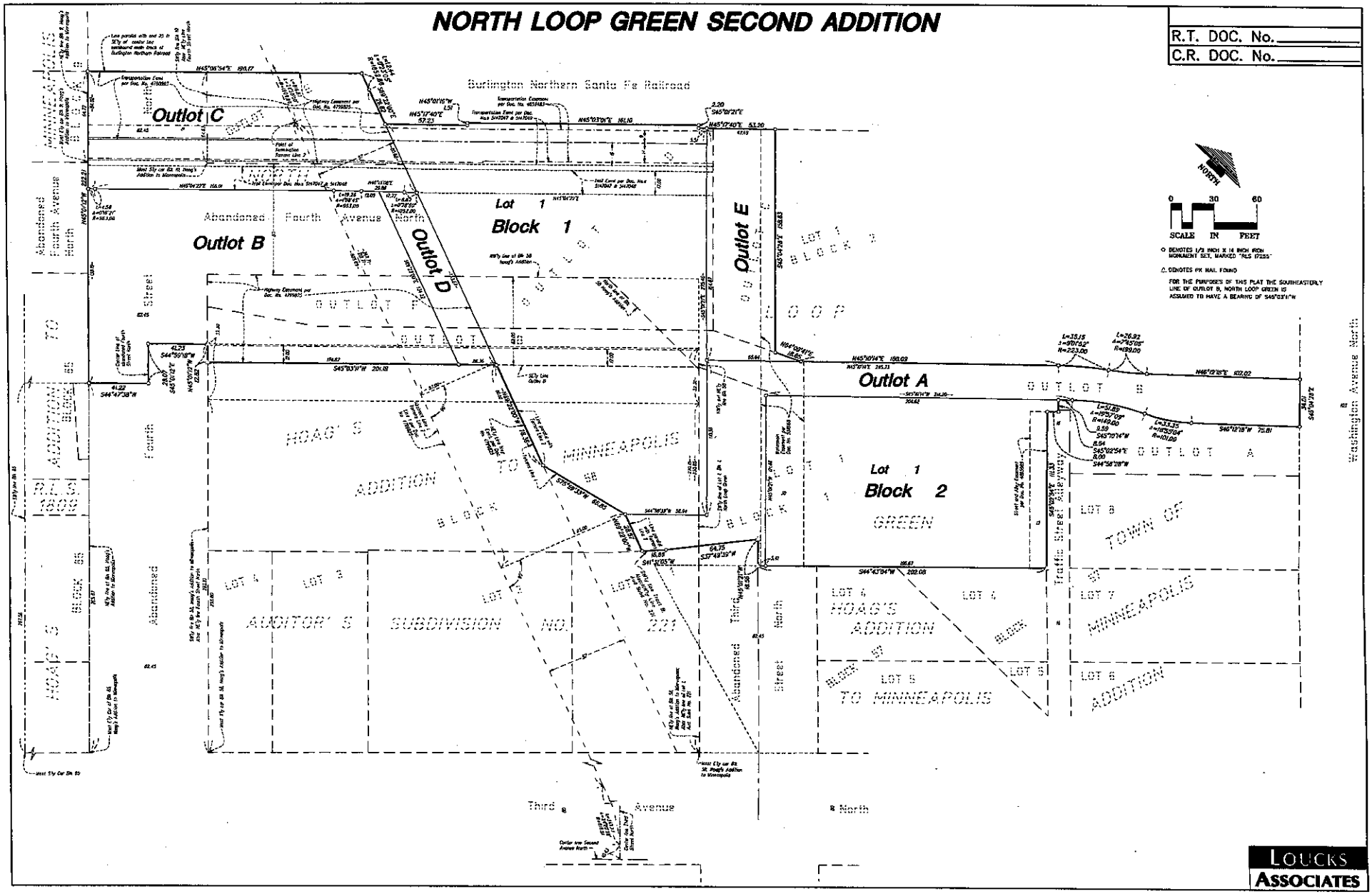

LOUCKS ASSOCIATES

SHEET 2 OF 2 SHEETS

Certificate of Correction for:

NORTH LOOP GREEN

Pursuant to the provisions of Minnesota Statutes, Chapter 505.174, I, Henry D. Nelson, a duly Licensed Land Surveyor in and for the State of Minnesota declares as follows:

1. That I prepared the plat of NORTH LOOP GREEN dated July 13, 2012 and filed on July 22, 2012 in the Office of the Registrar of Titles, Hennepin County, Minnesota, as Document No. 4977987.

2. That said plat contains errors, omissions or defects described in particular as follows: The graphic portion of the plat of NORTH LOOP GREEN shows an erroneous location of the north line of Hoag's Addition to Minneapolis. This erroneous location omits a small triangular portion of property as shown on the attached Exhibit 'A'. The legal description of NORTH LOOP GREEN included all of that part of Lot 10, Block 58, Town of Minneapolis shown as Lot 1, Block 21, Bradford and Lewis's Addition to Minneapolis. We have shown the location of this omitted area and have labelled it as Outlot B.

3. That said plat is hereby corrected in particular as follows: Revise the graphic location of the section line as shown on attached Exhibit 'A'.

I hereby certify that this Surveyor's Certificate of Plat Correction was prepared by me or under my direct supervision and that I am a duly Licensed Land Surveyor under the laws of the State of Minnesota.

Dated this _____ day of _____, 201____.

_____
Henry D. Nelson, Licensed Land Surveyor
Minnesota License No. 17255

This Surveyor's Certificate of Plat Correction to the plat of NORTH LOOP GREEN was approved by the City of Minneapolis, Minnesota, at a regular meeting held this _____ day of _____, 201____.

City of Minneapolis, Minnesota

_____ _____
Secretary of Planning Commission City Clerk

County Surveyor

This Surveyor's Certificate of Plat Correction has been reviewed and is approved this _____ day of _____, 201____.

By _____
Chris F. Mavis, Hennepin County Surveyor

Exhibit 'A'

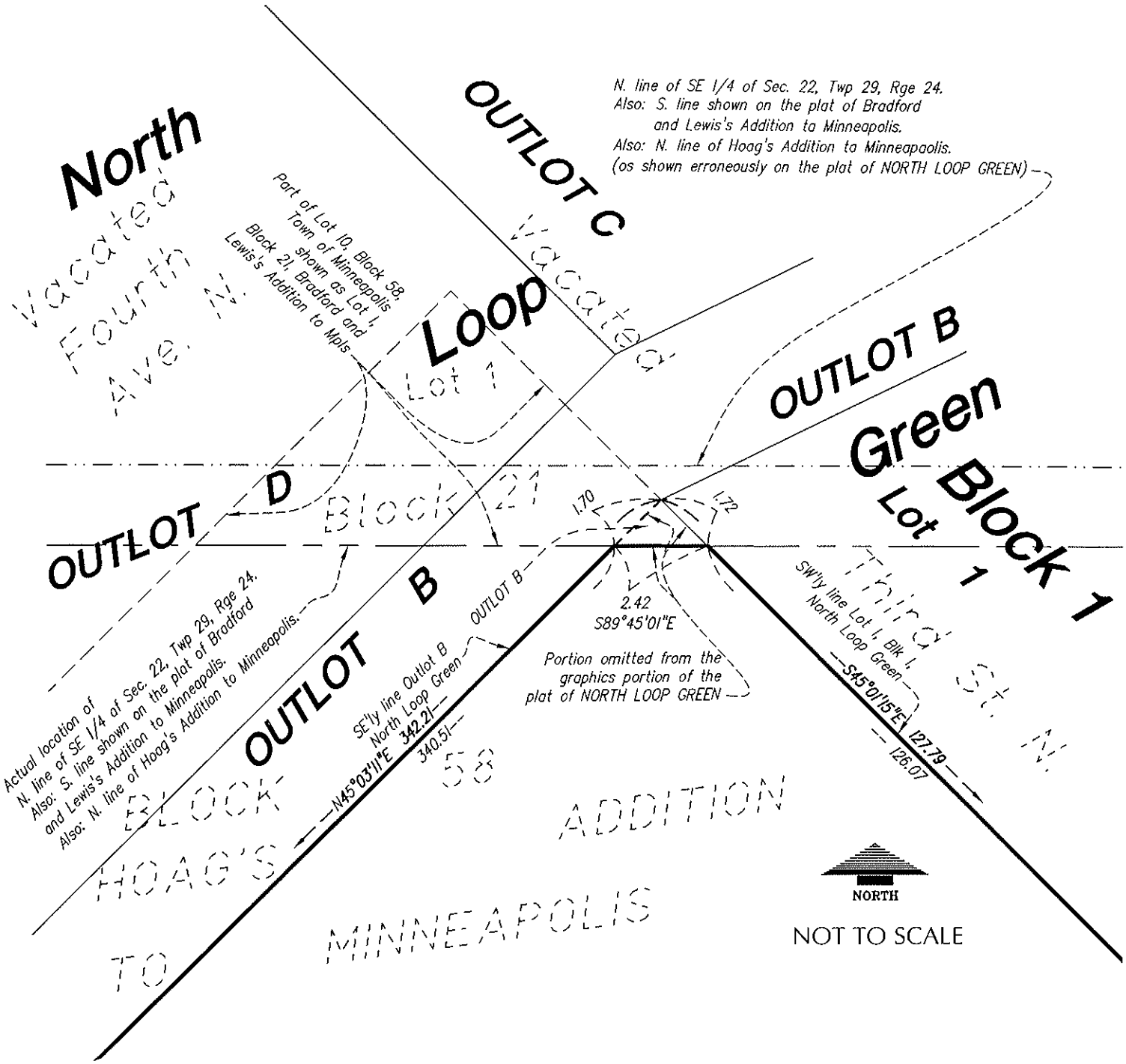

Loucks Associates
7200 Hemlock Lane, Suite 300
Minneapolis, Minnesota 55369-5592
Telephone: (763)424-5505 Fax: (763)424-5822
Web Page: www.LoucksAssociates.com
Planning • Civil Engineering • Land Surveying
Landscape Architecture • Environmental

Department of Public Works
Engineering Design Division/Right-of-Way Section
309 2nd Avenue South, Room 200
673-3607

Date: April 3, 2015

To: Hilary Dvorak – Planning
Erik Nilsson, City Attorney

From: Robert Boblett, Right of Way

Subject: North Loop Green 2nd Addition -- Preliminary and Final

I have reviewed the proposed preliminary and final versions of the North Loop Green 2nd Addition, and we have no Right of Way issues.

Dvorak, Hilary A.

From: Nilsson, Erik A.
Sent: Friday, April 03, 2015 2:48 PM
To: Dvorak, Hilary A.
Subject: RE: North Loop Green 2nd Addition -- Preliminary and Final

Hilary-

This is approved on my end too.

Have a good weekend-

Erik E. Nilsson | Assistant Minneapolis City Attorney | Phone: 612.673.2192 | Fax: 612.673.3362

Privileged and/or Confidential and/or Private Information:
This electronic message may contain information that is attorney-client or work product privileged and/or confidential and/or private. Only the intended recipient of this communication may waive the attorney-client privilege. To preserve the privilege, only distribute copies to those employees whose input on the issues is necessary.

If you are not the intended recipient of this e-mail: (1) do not read the content of the message; (2) immediately notify the sender that you incorrectly received the message; and (3) do not disseminate, distribute or copy this e-mail.

From: Boblett, Robert
Sent: Friday, April 03, 2015 2:42 PM
To: Dvorak, Hilary A.; Nilsson, Erik A.
Subject: North Loop Green 2nd Addition -- Preliminary and Final

Review Attached...

Bob
Right of Way
(612) 673-2428

Kai
SALON

DERAIL

NOW LEASING
DOCKSTREETFLATS.COM
DAILY $4.50

NOW LEASING
DOCKSTREETFLATS.COM

BERG
BAG CO
TRUCKS

DARBY'S
PATIO
NO
PARKING
BERG
BAG CO
TRUCKS
NO
STADIUM
PARKING

Hines

February 25, 2015

Council Member Jacob Frey
City Hall, Room 307
350 South 5th Street
Minneapolis, MN 55415

Via U.S. Mail

Re: Applications for Development of T3 Office Project

Dear Council Member Frey:

On behalf of Hines North Loop Green ("Hines"), I am writing to inform you that we will be submitting applications for Site Plan Review, Planned Unit Development, and Subdivision for the T3 Office Project (T3) which is located in the Minneapolis Warehouse Historic District.

T3 will be a seven-story heavy timber office building containing approximately 215,000 rentable square feet. The project will be Phase 2 of the North Loop Green Planned Unit Development (PUD) located at 323 Washington Avenue North in the Rail Yards Area of the Minneapolis Warehouse Historic District. The T3 project will redevelop a site currently used as a surface parking lot into a multi-tenant office development that provides new Class A office space and street level commercial activity in proximity to numerous alternative modes of transportation including light rail, commuter rail, bus, regional trails and bikeways, and the pedestrian skyway system. The T3 project is anticipated to be constructed in 2015 - 2016.

The two-lane private road, Dock Street, that was constructed as part of the PUD Phase 1 Dock Street Apartments project will provide the main access to and from the site. Dock Street was constructed by and is maintained by Hines, but is open to the public. The portion of Dock Street running from Washington Avenue North connecting to the project access drive located within the 3rd Street North View Corridor was built during the construction of the Phase 1 project.

The connection to/from the Cedar Lake Trail to the North Loop Neighborhood that was constructed with the Phase 1 Dock Street Apartments project will remain intact. The connection from the trail allows users to travel through the site on sidewalks or shared bicycle access along Dock Street.

150 Wells Fargo Center
90 South Seventh Street
Minneapolis, Minnesota 55402
P 612.344.1200
F 612.344.1189

I am the contact person for the application and my contact information is as follows:

Bob Pfefferle
Hines
90 South 7th Street, Suite 150
Minneapolis, MN 55402
(612) 332-9286
robert.pfefferle@hines.com

Please let me know if you have any questions or would like any further information at this time.

Sincerely,

Robert R. Pfefferle
Hines

Hines

February 25, 2015

Mr. David Frank
President
North Loop Neighborhood Association

Via Electronic Mail

Re: Applications for Development of T3 Office Project

Dear David:

On behalf of Hines North Loop Green ("Hines"), I am writing to inform you that we will be submitting applications for Site Plan Review, Planned Unit Development, and Subdivision for the T3 Office Project (T3) which is located in the Minneapolis Warehouse Historic District.

T3 will be a seven-story heavy timber office building containing approximately 215,000 rentable square feet. The project will be Phase 2 of the North Loop Green Planned Unit Development (PUD) located at 323 Washington Avenue North in the Rail Yards Area of the Minneapolis Warehouse Historic District. The T3 project will redevelop a site currently used as a surface parking lot into a multi-tenant office development that provides new Class A office space and street level commercial activity in proximity to numerous alternative modes of transportation including light rail, commuter rail, bus, regional trails and bikeways, and the pedestrian skyway system. The T3 project is anticipated to be constructed in 2015 - 2016.

The two-lane private road, Dock Street, that was constructed as part of the PUD Phase 1 Dock Street Apartments project will provide the main access to and from the site. Dock Street was constructed by and is maintained by Hines, but is open to the public. The portion of Dock Street running from Washington Avenue North connecting to the project access drive located within the 3rd Street North View Corridor was built during the construction of the Phase 1 project.

The connection to/from the Cedar Lake Trail to the North Loop Neighborhood that was constructed with the Phase 1 Dock Street Apartments project will remain intact. The connection from the trail allows users to travel through the site on sidewalks or shared bicycle access along Dock Street.

150 Wells Fargo Center, 90 South Seventh Street
Minneapolis, Minnesota 55402
P 612.344.1200
F 612.344.1189

I am the contact person for the application and my contact information is as follows:

Bob Pfefferle
Hines
90 South 7th Street, Suite 150
Minneapolis, MN 55402
(612) 247-1269
robert.pfefferle@hines.com

Please let me know if you have any questions or would like any further information at this time.

Sincerely,

Robert R. Pfefferle
Hines