CPED STAFF REPORT

Prepared for the City Planning Commission

CPC Agenda Item #3
April 27, 2015
BZZ-7062 and Vac -1641

LAND USE APPLICATION SUMMARY

Property Location: 420 East Hennepin
Project Name: 420 East Hennepin
Prepared By: Aaron Hanauer, Senior City Planner, (612) 673-2494
Applicant: Mark Krogh, Java Companies
Project Contact: Nathaniel Shea, Tanek
Request: To construct a one-story, approximately 5,100 square foot commercial building
Required Applications:

Alley Vacation	That part of the alley as shown on the plat of Rearrangement of Block 11, St. Anthony Falls Addition, bounded by Lots 1, 2 and 3 and by Central Avenue.
Site Plan Review	To construct a one-story, approximately 5,100 square foot commercial building

SITE DATA

Existing Zoning	C2/Neighborhood Corridor Commercial District PO/Pedestrian Oriented Overlay District
Lot Area	13,856 square feet / 0.32 acres
Ward(s)	3
Neighborhood(s)	Nicollet Island East Bank Adjacent to Marcy Holmes
Designated Future Land Use	Mixed use
Land Use Features	East Hennepin Activity Center East Hennepin Avenue Commercial Corridor Central Avenue Commercial Corridor
Small Area Plan(s)	Nicollet Island-East Bank Neighborhood Small Area Plan (2014)

Date Application Deemed Complete	April 10, 2015	**Date Extension Letter Sent**	N/A
End of 60-Day Decision Period	June 9, 2015	**End of 120-Day Decision Period**	N/A

BACKGROUND

SITE DESCRIPTION AND PRESENT USE.

The project site is roughly triangular in shape and has street frontage along East Hennepin Avenue, Central Avenue Northeast and 5th Street Southeast. Currently, there is an approximately 2,000 square foot building that was built in 1970 as a gas station at the southern portion of the property; the rest of the lot is surface parking that provides parking for approximately 30 vehicles. There are four curb cuts to the property; two along Central Avenue Northeast and two along East Hennepin Avenue.

SURROUNDING PROPERTIES AND NEIGHBORHOOD.

East Hennepin Avenue, and Central Avenue Northeast are highly trafficked streets that are well served by mass transit. Within the immediate area, there is primarily one to four-story commercial buildings; the neighboring building to the south, 416 East Hennepin Avenue is a two-story building with storefronts on both Central Avenue Northeast and East Hennepin Avenue. City records show that there is not a residential use within this property. The zoning of the subject and surrounding properties is C2/Neighborhood Corridor Commercial District.

PROJECT DESCRIPTION.

The proposed building is a 5,053 square foot, one-story brick building that will be built out to the East Hennepin Avenue and Central Avenue Northeast property lines. The building would be placed eight feet from the 5th Street Northeast property line; a patio is proposed between the building and 5th Street Northeast. The existing building would be demolished as part of the project. The building is proposed to be divided into three establishments; two restaurants and a haircut establishment. Pedestrian entrances would be located on all four elevations; two entrances on 5th Street Northeast, one entrance on each the east (East Hennepin Avenue) and west elevations (Central Avenue Northeast) and three entrances on the south elevation (facing the parking lot). The project site would have two vehicle access points; one on East Hennepin Avenue and one on Central Avenue Northeast. The project includes 19 off-street parking spaces. The applicant is also proposing to vacate a small dead-end alley which is located along Central Avenue Northeast in the middle of their property that has been in place since at least 1912 (source: 1912-1930 Sanborn map).

RELATED APPROVALS.

An administrative application was approved to allow a donation collection bin at 420 East Hennepin Avenue in 2011(BZZ-5241).

PUBLIC COMMENTS.

CPED has not received any correspondence prior to the staff report publication. Any correspondence received after the publication of the staff report and prior to the public meeting will be forwarded on to the Planning Commission for consideration.

ANALYSIS

SITE PLAN REVIEW

The Department of Community Planning and Economic Development has analyzed the application based on the required findings and applicable standards in the site plan review chapter:

1. Conformance to all applicable standards of Chapter 530, Site Plan Review.

Building Placement and Design – *Meets requirements*

- The placement of building will reinforce the street wall along East Hennepin Avenue and Central Avenue Northeast as the building would be built out to the property line. The building will also help create a building wall along 5th Street Southeast as it will be built 8 feet from the property line. The project will also maximize natural surveillance and visibility with the large percentage of windows and facilitate pedestrian access and circulation with the pedestrian doors leading directly to the public sidewalk or walkway.
- The first floor of the building will be located no greater than 8 feet from the property line abutting a street.
- 5th Street Southeast is the only street in which there is space between the building and the property line. The applicant is proposing an eight-foot deep patio at this location.
- The building would have principal entrances facing the public street on East Hennepin Avenue, Central Avenue and 5th Street Southeast.
- The on-site accessory parking facility will be located to the interior of the site.
- The building walls contain architectural detail such as vertically-oriented metal awnings and horizontally oriented metal copings above windows and entries. The building will also contain windows as required by Chapter 530 that will create visual interest and security of adjacent outdoor spaces by maximizing natural surveillance and visibility.
- The building does not contain blank walls that exceed 25 feet in length.
- The applicant is proposing brick panels as the only exterior material besides windows. Per the Minneapolis Guide to Exterior Building Walls and Materials, brick panels are considered a durable material and are allowed to comprise 75 percent of the elevation. The applicant's proposal is in compliance with the allowed percentages (See Table 1). The exterior materials and appearance of the rear and side walls are similar and compatible with the front of the building. All elevations will have two tones of brick. Given the small size of the building, CPED encourages the applicant to consider having one brick color, instead of two, for the entire building.
- Plain face concrete block will not be an exterior building material.
- The seven principal entrances are clearly defined and emphasized through the use of a vertically-oriented metal awnings and horizontally-oriented metal copings. The building will exceed the window requirements (see Table 2 below). Since the building is within the PO District, at least 40 percent of the first floor façade that faces a public street or sidewalk shall be windows or doors; the elevation that faces the onsite parking lot is required to have 30 percent. As conditioned, the windows and doors shall be clear or lightly tinted glass with a visible light transmittance of 0.6 or higher and shall not have shelving, mechanical equipment or other similar features that block views into and out of the building between four and seven feet above adjacent grade for the required window percentage. The design of the windows meets the requirements outlined in 530.120. The window fenestration of the two-tenant building is evenly distributed and each tenant meets the minimum window requirement.

- There will be no inactive functions along the perimeter of the building.
- The flat roof of the proposed building is similar to surrounding buildings.
- There is no parking garage for this project.

Table 1. Percentage of Exterior Materials per Elevation (excludes windows)

Material	Allowed max %	North (5th)	East (Central)	West (Hennepin)	South (parking lot)
Brick (panel)	75%	37%	46%	50%	49%

Table 2. Percentage of Windows Required for Elevations Facing a Public Street, Sidewalk, Pathway, or On-Site Parking (Nonresidential Use)

	Code Requirement		Proposed	
North (5th Street)				
1st Floor	40% minimum	167 sq. ft.	63%	260 sq. ft.
South (parking lot)				
1st Floor	30% minimum	226 sq. ft.	51%	386 sq. ft.
East (Central Ave.)				
1st Floor	40% minimum	224 sq. ft.	54%	300 sq. ft.
West (Hennepin Ave.)				
1st Floor	40% minimum	240 sq. ft.	50%	300 sq. ft.

Access and Circulation – *Meets requirements*

- The entrances along Central Avenue Northeast and East Hennepin Avenue lead directly to the public sidewalk. The entrances along 5th Street Northeast will have a walkway at least four feet in width leading to the public sidewalk, and the entrances on the south elevation leading to the surface parking lot will be 7.5' in width. As conditioned, the walkway connecting the building entrances on the south elevation to the parking lot will be well lit.
- The project site currently has an uncovered transit shelter along East Hennepin Avenue. Metro Transit stated that this bus stop meets their standards for a covered bus shelter, but it cannot accommodate one at this time because of space constraints on the sidewalk due to the location of an existing tree. Since the sidewalk will be reconstructed, CPED encourages the applicant to coordinate with Public Works and Metro Transit to provide electrical connections for heat and light to a potential future shelter.
- Vehicular access/circulation is designed to minimize conflicts with pedestrian traffic. The project reduces the number of curb cuts from four to two to the project site. The applicant has designed the parking lot to have all maneuvering take place on site and has narrowed the driveway at the property lines to 20 feet in width.
- The project site does not share an alley with a residential use(s).
- The site plan minimizes the use of impervious surfaces and will exceed their landscaping percentage requirement (see Table 3).

Landscaping and Screening – *Meets requirements*

- The composition and location of landscaped areas complement scale of development and surroundings.

- The project site meets or exceeds the minimum landscape area, canopy tree, and shrub requirement (see Table 3). The applicant is also proposing perennials and grasses within their landscaped areas.
- The parking area along Central Avenue Northeast and East Hennepin Avenue is required to comply with the landscaping and screening requirements outlined in section 530.170. The landscaped yards along both Central Avenue Northeast and Hennepin Avenue East meet these requirements. The landscaped yards are a minimum of seven feet in width, they will have screening with shrubs that are not less than 60 percent opaque, and a tree will be provided for each 25 linear feet of parking lot frontage.
- City records indicate that there is not a residential use in the building to the south, 416 East Hennepin Avenue; therefore, a landscaped yard is not required between the parking lot and this building to the south. However, the applicant is proposing an 8.5' wide landscaped yard between the off-street parking and the shared property line with 416 East Hennepin Avenue.
- The corners of the parking lot where rows of parking spaces leave areas unavailable for parking or vehicular circulation will be landscaped as specified for a required landscaped yard.
- No parking space will be located more than 50 feet from the center of an on-site deciduous tree. The applicant is proposing a tree island that is seven feet in width in the middle of the southern 10 parking spaces to help meet this requirement.
- As conditioned, all landscape areas shall be covered with turf grass, native grasses, perennial flowering plants, vines, wood mulch, shrubs or trees. In addition, the installation and maintenance of all landscape materials shall comply with the standards outlined in section 530.120.

Table 2. Landscaping and Screening Requirements

	Code Requirement	Proposed
Lot Area	--	13,856 sq. ft.
Building footprint	--	5,053 sq. ft.
Remaining Lot Area	--	8,803 sq. ft.
Landscaping Required	1,761 sq. ft.	1,856 sq. ft.
Canopy Trees (1: 500 sq. ft.)	5 trees	5 trees
Shrubs (1: 100 sq. ft.)	18 shrubs	62 shrubs

Additional Standards – *Meets requirements*

- A 6"x6" continuous curb will be installed along the perimeter of the parking lot and driveway. CPED encourages the applicant to work with Public Works and to provide on-site retention and filtration of stormwater.
- The site plan will not block views of important elements of the city.
- The placement of the building will have minimal casting of shadows on public spaces and adjacent properties.
- The placement of the building is located and arranged to minimize the generation of wind currents at ground level.
- The site plan includes crime prevention design elements as specified in section 530.260. This includes natural surveillance and visibility with a greater amount of windows than required, territorial reinforcement with the landscaping, and natural access control with the entrances leading directly to the street or walkway.
- The project site does not include a locally designated historic resource or structure that has been determined to be eligible to be locally designated.

2. Conformance with all applicable regulations of the zoning ordinance.

The applicant is proposing two restaurants and a haircut establishment which is considered a general retail sales and services use. These uses are *permitted uses* in the C2 zoning district. However, per section 551.100, fast food restaurants and restaurants with a drive-through window are not permitted in the PO/Pedestrian Oriented Overlay District.

Off-street Parking and Loading – *Meets requirements*

- 19 off-street parking spaces are proposed, which is in compliance with the minimum and maximum off-street parking requirements. The base off-street parking requirement for restaurant uses is 1 space per 500 square feet of gross floor area up to 2,000 square feet plus one space per 300 square feet of gross floor area in excess of 2,000 square feet. Restaurants are proposed in spaces labeled Tenant 1 and 3 on the floor plan. These spaces are 2,196 and 1,894 square feet respectively and would require five and four parking spaces respectively. Since the project site is within a pedestrian oriented overlay district and it is a nonresidential use, the off-street parking requirement is 75 percent of the minimum requirement. Therefore, the required parking for the restaurant spaces is four and three parking spaces. Tenant 3 is proposed to be a 936 square foot haircut establishment. Per Table 541-1, non-residential uses with 1,000 square feet or less shall be exempt from minimum off-street parking requirements. Therefore, the minimum off-street parking for the proposed building is seven spaces.
- The base maximum allowed parking for a restaurant use is 1 space per 75 square feet of gross floor area. This would allow the restaurant labeled Tenant 1 to have 29 off-street parking spaces and Tenant 3 to have 25 off-street parking spaces. The maximum off-street parking for a general retail sales and services use is one space for every 200 square feet of floor area. Therefore, Tenant 2 would be allowed to have five off-street parking spaces. The maximum parking allowed for the entire building would be 59 spaces. Since the property is within the PO district and the uses are nonresidential, the maximum off-street parking allowed is 75 percent of the maximum allowed as specified in Table 541-1. Therefore, the maximum parking allowed would be 22 spaces for Tenant 1, four spaces for Tenant 2, and 19 spaces for Tenant 3; 45 spaces total. CPED also analyzed a scenario where all three uses would be general retail sales and services. If that was the case, the maximum allowed parking would be 19 spaces after the applied maximum set in the PO district requirements.
- The proposed parking area design meets the requirements outlined in Chapter 541 Off-Street Parking and Loading. The driveways at Central Avenue Northeast and East Hennepin Avenue are 20 feet in width and there is a 22-foot wide, two-way drive aisle for maneuvering within the parking area. There will be 14 standard sized parking spaces (8.5' wide by 18' deep) and 5 compact sized parking spaces (8' wide by 15' deep). Per 541.330, 75 percent of the minimum required parking spaces (i.e. seven spaces) are required to comply with the minimum dimensions for standard spaces.
- Per Table 541-3, each establishment is required to provide three bike parking spaces (nine total) and that 50 percent off the required bike parking spaces are required to be located within 50 feet of a principal entrance. The applicant is proposing to provide 10 bike parking spaces along East Hennepin Avenue; all within 50 feet of a principal entrance. As a condition of approval, the placement of the proposed bike parking spaces require an encroachment permit.
- No loading is required for the 5,053 square foot restaurant building.

Table 3. Vehicle Parking Requirements Per Use (Chapter 541)

	Minimum Parking Requirement	Applicable Reductions	Total Minimum Requirement	Maximum Parking Allowed	Proposed
Establishment 1: Restaurant	5	1	4	22	--
Establishment 2: General Retail Sales and Services	0	N/A	0	4	
Establishment 3: Restaurant	4	1	3	19	
Total	**9**	**2**	**7**	**44**	**19**

Table 4. Bicycle Parking and Loading Requirements (Chapter 541)

	Minimum Bicycle Parking	Minimum Short-Term	Minimum Long-Term	Proposed	Loading Requirement	Proposed
Establishment 1: Restaurant	3	Not less than 50%	--	--	0	0
Establishment 2: General Retail Sales and Services	3	Not less than 50%	--	--	0	0
Establishment 3: Restaurant	3	Not less than 50%	--	--	0	0
Total	**9**	**--**	**--**	**10**	**0**	**0**

Building Bulk and Height – *Meets requirements*

Table 5. Building Bulk and Height Requirements

	Code Requirement	Proposed
Lot Area	--	13,825 sq. ft. / 0.32 acres
Gross Floor Area (GFA)	--	5,053 sq. ft.
Minimum Floor Area Ratio (GFA/Lot Area)	N/A	0.3
Maximum Floor Area Ratio (GFA/Lot Area)	1.7	0.3
Maximum Building Height	4 stories or 56 feet, whichever is less	1 story/17 feet

Lot Requirements – *Meets requirements*

- Per Table 548-2, there are no lot dimension requirements for restaurants or general retail sales and services establishments.

Yard Requirements – *Meets requirements*

- The C2 zoning district does not have minimum yard requirements when bordering nonresidential or office residential zoning districts, or nonresidential structures. The project site is surrounded by parcels that are zoned C2 and none of the adjacent properties are a residential use.

Signs – *Not applicable*

- The applicant has not submitted sufficient sign details to evaluate. As conditioned, all signs will be required to meet the standards outlined in Chapter 543 of the zoning code.

Refuse Screening – *Meets requirements*

- The screening of the refuse and storage containers will meet the requirements of 535.80 in terms of compatibility and height. The applicant is proposing an 8.25' tall, brick/stone enclosure with wood swing-out doors. CPED encourages the applicant to place the trash enclosure in a less visible location in the middle of the site.

Screening of Mechanical Equipment – *Meets requirements with Conditions of Approval*

- No roof plan was provided with the application. All rooftop mechanical equipment will be required to meet the screening standards outlined in Section 535.70. No public utility transformers are proposed as part of the project.

Lighting – *Meets requirements with Conditions of Approval*

- A lighting plan was not provided with the application. All lighting will be required to meet the standards outlined in Section 535.590.

Impervious Surface Area – *Not applicable*

- There is not a maximum impervious surface area standard for the C2 zoning district.

Specific Development Standards – *Meets requirements with Conditions of Approval*

- As conditioned, the sit down restaurants will be required to meet the specific development standard that the premise, all adjacent streets and sidewalks within 100 feet shall be inspected regularly for purposes of removing any litter found thereon.

Overlay District Standards – *Meets requirements*

The project site is in compliance with the PO district requirements.

- The building will not have a drive-through window (551.90).
- The proposed establishments are not fast food restaurant(s) (551.100).
- The building placement is within eight feet of a lot line abutting a street (551.110).
- The fenestration exceeds the minimum 40 percent requirement (551.120).
- The accessory parking lot does not exceed 60 feet in width (551.140).
- The off-street parking is in compliance with the minimum and maximum number of off-street parking allowed (551.140).

PDR

The project had an initial PDR review on February 12, 2015. The requirements outlined in the report will need to be met prior to building permit issuance.

3. Conformance with the applicable policies of *The Minneapolis Plan for Sustainable Growth*.

The Minneapolis Plan for Sustainable Growth identifies the site as mixed use on the future land use map. The mixed use future land use encourages mixed use development including mixed use with residential. The proposed project will have three uses within the building. The project site is part of the East Hennepin Activity Center and has street frontage along both the East Hennepin Avenue Commercial Corridor and the Central Avenue Commercial Corridor. The proposed development is consistent with the following principles and policies outlined in the comprehensive plan:

Land Use Policy 1.3: Ensure that development plans incorporate appropriate transportation access and facilities, particularly for bicycle, pedestrian, and transit.

1.3.1 Require safe, convenient, and direct pedestrian connections between principal building entrances and the public right-of-way in all new development and, where practical, in conjunction with renovation and expansion of existing buildings.

Land Use Policy 1.4: Develop and maintain strong and successful commercial and mixed use areas with a wide range of character and functions to serve the needs of current and future users.

1.4.1 Support a variety of commercial districts and corridors of varying size, intensity of development, mix of uses, and market served.
1.4.4 Continue to encourage principles of traditional urban design including site layout that screens off-street parking and loading, buildings that reinforce the street wall, principal entrances that face the public sidewalks, and windows that provide "eyes on the street".

Land Use Policy 1.5: Promote growth and encourage overall city vitality by directing new commercial and mixed use development to designated corridors and districts.

Land Use Policy 1.10: Support development along Commercial Corridors that enhances the street's character, fosters pedestrian movement, expands the range of goods and services available, and improves the ability to accommodate automobile traffic.

Land Use Policy 1.12: Support Activity Centers by preserving the mix and intensity of land uses and by enhancing the design features that give each center its unique urban character.

1.12.1 Encourage a variety of commercial and residential uses that generate activity all day long and into the evening.
1.12.2 Encourage mixed use buildings, with commercial uses located on the ground floor and secure entrances for residential uses.
1.12.3 Encourage active uses on the ground floor of buildings in Activity Centers.

Land Use Policy 10.10: Support urban design standards that emphasize a traditional urban form in commercial areas.

10.10.1 Enhance the city's commercial districts by encouraging appropriate building forms and designs.
10.10.4 Orient new buildings to the street to foster safe and successful commercial nodes and corridors.
10.10.6 Require storefront window transparency to assure both natural surveillance and an inviting pedestrian experience.

Urban Design Policy 10.18: Reduce the visual impact of automobile parking facilities.

10.18.1 Require that parking lots meet or exceed the landscaping and screening requirements of the zoning code, especially along transit corridors, adjacent to residential areas, and areas of transition between land uses.
10.18.3 Locate parking lots to the rear or interior of the site.
10.18.4 Provide walkways within parking lots in order to guide pedestrians through the site.
10.18.17 Minimize the width of ingress and egress lanes along the public right of way in order to provide safe pedestrian access across large driveways.

Urban Design Policy 10.19: Landscaping is encouraged in order to complement the scale of the site and its surroundings, enhance the built environment, create and define public and private spaces, buffer and screen, incorporate crime prevention principles, and provide shade, aesthetic appeal, and environmental benefits.

10.19.1 In general, larger, well-placed, contiguous planting areas that create and define public and private spaces shall be preferred to smaller, disconnected areas.
10.19.2 Plant and tree types should complement the surrounding area and should include a variety of species throughout the site that include seasonal interest. Species should be indigenous or proven adaptable to the local climate and should not be invasive on native species.

Urban Design Policy 10.22: Use Crime Prevention Through Environmental Design (CPTED) principles when designing all projects that impact the public realm, including open spaces and parks, on publicly owned and private land.

10.22.1 Integrate "eyes on the street" into building design through the use of windows to foster safer and more successful commercial areas in the city.
10.22.3 Design the site, landscaping, and buildings to promote natural observation and maximize the opportunities for people to observe adjacent spaces and public sidewalks.
10.22.5 Locate landscaping, sidewalks, lighting, fencing and building features to clearly guide pedestrian movement on or through the site and to control and restrict people to appropriate locations.

It is recognized that the one-story building is not in compliance with Land Use Policy: 1.12.5 which encourage a height of at least two stories for new buildings in Activity Centers. During pre-application meetings, CPED encouraged the applicant to consider a two-story (or taller) building on multiple occasions. However, the applicant did not pursue this option. Given that there is not a minimum floor area ratio requirement, the proposal complies with the zoning code requirements.

4. Conformance with applicable development plans or objectives adopted by the City Council.

The Nicollet Island-East Bank Neighborhood Small Area Plan provides additional guidance of the project site. The project is in conformance with the small area plan's major strategic goal of

cultivating a mixed-use corridor. It is also in conformance with the plan's top priorities as the new development will be a quality development with active uses and redeveloping a small and underutilized parcel. In addition, the new building will have a large amount of glazing on all elevations, which increases its focus on pedestrians

5. Alternative compliance.

The project complies with all standards outlined in Chapter 530, Site Plan Review.

VACATION

RESPONSES FROM UTILITIES AND AFFECTED PROPERTY OWNERS. Of the responses received, including Public Works, there were no objections or easements requested.

FINDINGS. The applicant is proposing to vacate a small dead-end alley (approximately 800 square feet) which is located along Central Avenue Northeast in the middle of their property that has been in place since at least 1912 (source: 1912-1930 Sanborn map). This right-of-way exists on paper only and does not function as a public alley.

The Department of Public Works and the Department of Community Planning and Economic Development find that the area proposed for vacation is not needed for public purpose, is not part of a public transportation corridor, and can be vacated.

RECOMMENDATIONS

The Department of Community Planning and Economic Development recommends that the City Planning Commission adopt staff findings for the application by Java Companies for the property located at 420 East Hennepin Avenue:

A. Site Plan Review.

Recommended motion: **Approve** subject to the following conditions:

1. Per 530.120 (b) (2), the glass within the doors shall be clear or lightly tinted glass with a visible light transmittance ratio of 0.6 or higher. In addition, the windows shall not have shelving, mechanical equipment or other similar features that block views into and out of the building between four and seven feet above adjacent grade for the required window percentage.
2. All lighting shall be required to meet the standards outlined in Section 535.590. The walkway connecting the building entrances on the south elevation to the parking lot shall be well lit. Any proposed light poles shall comply with 535.110.
3. Per 530.180, all landscape areas shall be covered with turf grass, native grasses, perennial flowering plants, vines, wood mulch, shrubs or trees. In addition, the installation and maintenance of all landscape materials shall comply with the standards outlined in section 530.120.
4. Per 551.100, fast food restaurants are prohibited at this location. In addition, sit down restaurants will be required to meet the specific development standard outlined in Chapter 536 that the premise, all adjacent streets and sidewalks within 100 feet shall be inspected regularly for purposes of removing any litter found thereon.
5. The placement of the proposed bike parking spaces require an encroachment permit approved by Public Works.

6. All rooftop mechanical equipment will be required to meet the standards outlined in Section 535.70

B. Vacation

Recommended motion: **Approve** the application to vacate the part of the alley as shown on the plat of Rearrangement of Block 11, St. Anthony Falls Addition, bounded by Lots 1, 2 and 3 and by Central Avenue.

ATTACHMENTS

1. PDR report
2. Public Works response to vacation request
3. Written description and findings submitted by applicant
4. Zoning map
5. Plans –survey, removal, civil, landscape, elevations
6. Aerial and photos

Minneapolis Development Review
250 South 4th Street
Room 300
Minneapolis, MN 55415

Preliminary Development Review Report

Development Coordinator Assigned: **DONALD ZART**
(612) 673-2726
don.zart@minneapolismn.gov

Status *
RESUBMISSION REQUIRED

Tracking Number:	PDR 1001284
Applicant:	420 HENNEPIN AVE E LLC 333 WASHINGTON AVE N, STE 401 MINNEAPOLIS, MN 55401
Site Address:	420 HENNEPIN AVE E
Date Submitted:	04-FEB-2015
Date Reviewed:	12-FEB-2015

Purpose

The purpose of the Preliminary Development Review (PDR) is to provide Customers with comments about their proposed development. City personnel, who specialize in various disciplines, review site plans to identify issues and provide feedback to the Customers to assist them in developing their final site plans.

The City of Minneapolis encourages the use of green building techniques. For additional information please check out our green building web page at: http://www.ci.minneapolis.mn.us/mdr/GreenBuildingOptions_home.asp.

DISCLAIMER: The information in this review is based solely on the preliminary site plan submitted. The comments contained in this report are preliminary ONLY and are subject to modification.

Project Scope

Proposed new one story, 5,023 sq ft building. As proposed there will be 2 restaurants sharing the space.

Review Findings (by Discipline)

❑ Fire Safety

- The Restaurant that faces Central Ave should have a separate address
- Fire department connection must be located on the address side of building and within 150 feet of a hydrant
- Maintain fire apparatus access at all times

❑ Business Licensing

- Please work with the assigned DC, Don Zart, regarding the Health Department's Plan Review and the required Business License.

***Approved**: You may continue to the next phase of developing your project.
***Resubmission Required**: You cannot move forward or obtain permits until your plans have been resubmitted and approved.

❑ Zoning - Planning

- At a minimum site plan review application will be required for the proposed new construction.
- Applicant is proposing 16 percent landscaping which is below the minimum 20 percent required:
- Call out bike parking and state the number of bikes the bike racks will accommodate.
- trash enclosure elevations/details will be required for land use review.
- a second tree will be required along Central Avenue NE to comply with the site plan review requirement: "Not less than one (1) tree shall be provided for each twenty-five (25) linear feet or fraction thereof of parking or loading area lot frontage."
- Will likely require a main entrance along 5th Street SE to comply with site plan review standard: "The building shall be oriented so that at least one (1) principal entrance faces the public street. In the case of a corner lot, the principal entrance shall face the front lot line."
- Proposing pavement foxi rose for screening of the parking lot along Central Avenue NE and Hennepin Avenue Northeast. Provide documentation that shrub planting will meet the requirement of being three feet in height and not less than 60 percent opaque year around.
- Provide details of restaurant and confirmation that it will not be a fast food restaurant; fast food restaurants are not allowed in newly constructed buildings in the C2 District or PO District (548.300 and 551.100)

❑ Addressing

- The proposed addresses are 420 Hennepin East and 421 Central Ave SE.

❑ Parks - Forestry

- (4) Honey locust in grates on Hennepin side. If full walk replacement is planned no roots greater than 2" may be cut during grading or curb and gutter replacement. Use existing subgrade inside drip lines if permitted. I don't know if they plan to reset existing grates, or replace or remove. The preferred would be to just remove grates.
- Craig Pinkalla Minneapolis Park & Recreation Board - Forestry Preservation Inspections 612-499-9233. Contact Craig regarding removal or protection of trees during construction in the city right of way.
- Effective January 1, 2014, the City of Minneapolis and the Minneapolis Park and Recreation Board adopted an update to the existing Parkland Dedication Ordinance.
- The adopted City of Minneapolis Parkland Dedication ordinance is located in Section 598.340 of the City's Land Subdivision ordinance:
- http://library.municode.com/index.aspx?clientId=11490
- As adopted, the fee in lieu of dedication for new residential units is $1,500 per unit (affordable units excluded per ordinance) and for commercial and industrial development it is $200 per development employee (as defined in ordinance). Any dedication fee (if required) must be paid at the time of building permit issuance. There is also an administration fee that is 5% of the calculated park dedication fee.
- As proposed, for your project at 420 Hennepin Ave E, the calculated dedication fee is as follows:
- Maximum fee at current maximum per development employee = $1,000
- 5% of $1,000 (Administrative Fee) = $ 50
- Total = $1,050
- This is a preliminary calculation based on your current proposal; a final calculation will be made at the time of building permit submittal.
- For further information, please contact Don Zart at (612)673-2726.

❑ Water

- The plan as submitted meets the requirements of the Public Works Water Maintenance & Distribution Division.

❑ Right of Way

- An encroachment permit shall be required for all streetscape elements in the Public right-of-way such as: plants & shrubs, planters, tree grates and other landscaping elements, sidewalk furniture (including bike racks and bollards), and sidewalk elements other than standard concrete walkways such as pavers, stairs, raised landings, retaining walls, access ramps, and railings (NOTE: railings may not extend into the sidewalk pedestrian area). Please contact Bob Boblett at (612) 673-2428 for further information.
- Note to the Applicant: Any elements of an earth retention system and related operations (such as construction crane boom swings) that fall within the Public right-of-way will require an encroachment permit application. If there are to be any earth retention systems which will extend outside the property line of the development then a plan must be submitted showing details of the system. All such elements shall be removed from the Public right-of-way following construction with the exception of tie-backs which may remain but must be uncoupled and de-tensioned. Please contact Bob Boblett at (612) 673-2428 for further information.
- In addition, any elements of an earth retention system and related excavations that fall within the Public right-of-way will require a "Right-of-Way Excavation Permit". This permit is typically issued to the General Contractor just prior to the start of construction. However, it is the Applicant's responsibility to insure that all required permits have been acquired by its consultants, contractors, sub-contractor's prior to the start of work.
- Contact Paul Cao at (612) 673-2943 for position and alignment of bike racks proposed in the Public right-of-way. If the racks are privately owned, they will require an encroachment permit.
- Note to the Applicant: The existing alley indicated on the survey is mistakenly identified as "vacated". The Applicant will be required to go through the vacation process and is encouraged to apply through the City Clerks Office. For further information on the process and an application, please contact (612) 673-2428.

❑ Traffic and Parking

- All Metro Transit Bus stops shall be clearly identified on the plans.
- Current ordinance states that all maneuvers associated with loading, parking or sanitation pick up for a private development shall occur on private property. Please provide a narrative explaining the trash removal operations and show turning maneuvers for all truck type vehicles that will be using the site and loading/parking entrance areas. Per City Ordinance the Applicant shall provide for (and identify) a solid waste collection point (SWCP) on the site plans. The location of the SWCP is subject to the review and approval of the Public Works Department.
- Each parking space should have turning maneuvers that can be done without crossing the right of way for each direction the vehicle could be traveling in. Show the turning maneuvers for the two end spaces on the westerly most parking lane.
- Please contact Bill Prince at (612) 673-3901 regarding existing and proposed street lighting. All street lighting (existing and proposed) shall be shown clearly on the site plan.
- Note to the Applicant: Please add the following notes to the site plan:
    - Street lighting installed as part of the Project shall be inspected by the City. Contractors shall arrange for inspections with the Traffic Department, please contact Dave Prehall at (612) 673-5759 for further information. Any lighting installations not meeting City specifications will be required to be reinstalled at Owner expense.
    - An obstruction permit is required anytime construction work is performed in the Public right-of-way. Please contact Scott Kramer at (612) 673-2383 regarding details of sidewalk and lane closures. Log on to http://minneapolis.mn.roway.net/ for a permit.
    - Contact Allan Klugman at (612) 673-2743 prior to construction for the temporary removal/temporary relocation of any City of Minneapolis signal system that may be in the way of construction.
    - All costs for relocation and/or repair of City Traffic facilities shall be borne by the Contractor and/or Property Owner.
    - Contact Doug Maday at (612) 673-5755 prior to construction for the removal of any City of Minneapolis right of way signs that may be in the way of construction.

❑ Street Design

- The plan as submitted meets the requirements of the Public Works Street Design Division.

❑ Sidewalk

- Note to the Applicant: Any existing sidewalk, curb and gutter, alley, or other concrete infrastructure in the public right of way that is currently defective, and any that is damaged during construction, must be removed and replaced at the time of the site development work.
- The site plans include removal and replacement of all curb and sidewalk along Hennepin Ave., but only partial removals and replacements along Central Ave.; the Applicant should consider removal and replacement of all curb & gutter and all sidewalks within the project limits.
- ADA compliant pedestrian ramps are required at each established crosswalk within the project limits; in addition to the intersection at Hennepin Ave. and 5th St. S.E. construct an ADA compliant pedestrian ramp at 5th St. S.E. and Central Ave.

❑ Environmental Health

- City records indicate that a Shell Gas Station was constructed on site in 1970. No records for the installation of gasoline tanks could be identified in either the Minneapolis Fire Department or Minnesota Pollution Control Agency records. In November 2014, 2 underground tanks were removed. No detection of petroleum product was found in soil samples taken from the tank basin. The site is currently enrolled in the MPCA Voluntary Investigation and Clean-up program. A site contingency plan needs to be developed and submitted to the MPCA VIC program as part of the site remedial action plan addressing actions that will be taken regarding if a tank is found during redevelopment.
- If the project will be disturbing identified impacted soils on the site preapproval for removal, disposal and/or reuse of must occur from the MCPA and the City of Minneapolis prior to beginning excavation activities. If impacted soil is encountered during site activities call the MN State Duty officer at (615) 649-5451.
- If dewatering is required during site construction see below for city permit requirements. Subgrade structures should be designed to prevent infiltration of groundwater without the need for a permanent dewatering system being installed. If a continuously operating permanent dewatering system is needed it must be approved as part of the sanitary sewer and storm drain site plan approval prior to construction beginning.
- No construction, demolition or commercial power maintenance equipment shall be operated within the city between the hours of 6:00 p.m. and 7:00 a.m. on weekdays or during any hours on Saturdays, Sundays and state and federal holidays, except under permit. Contact Environmental Services at 612-673-3867 for permit information.
- Permits and approval are required from Environmental Services for the following activities: Temporary storage of impacted soils on site prior to disposal or reuse; Reuse of impacted soils on site; Dewatering and discharge of accumulated storm water or ground water, underground or aboveground tank installation or removal, well construction or sealing. Contact Tom Frame at 612-673-5807 for permit applications and approvals.

❑ Historical Preservation Committee

- The wrecking of the existing structure will require a review for historic preservation.

❑ Sewer Design

- Utility Connections: The proposed sanitary sewer connection connects to a 12" cement pipe that was lined with a 10" PVC pipe. If possible, it is preferred that the proposed connection occur at the existing manhole adjacent to where the proposed connection is currently located. Please evaluate if this is feasible, if not contact Jeremy Strehlo for additional connection requirements. If connecting to the manhole the invert of the connection should be at or above the crown of the outgoing sewer but by no more than 2'.
- For comments or questions on Public Works Surface Water & Sewers Division related requirements please contact Jeremy Strehlo, (Professional Engineer) at (612) 673-3973, or jeremy.strehlo@minneapolismn.gov

❑ Construction Code Services

- Relocate Accessible parking with aisle to the shortest accessible route of travel to the building accessible entrance(s) per 2015 Minnesota State Accessibility Code Section 1106.6.
- Clearly mark "No Parking" on accessible aisle as required per 2015 Minnesota State Accessibility Code Section502.4.4. Also, accessible aisle location, width and length must comply with 2015 Minnesota State Accessibility Code Section(s) 502.4.1, 502.4.2 and 502.4.3.
- Submit section view drawing of proposed concrete ribbon curb.
- Clearly identify accessible entrance doors for both restaurants and must comply with 2015 Minnesota State Accessibility Code Section 402.2.1. Minimum 5' x 5' landing at accessible entrance doors and it must be noted on site plan.
- Install new direction signage on entrance doors on 5 Street East, directing public to ADA Compliance doors and ADA Parking Area.
- Submit SAC Determination Letter when submitting construction plans for review.

END OF REPORT

Minneapolis
City of Lakes

Department of Public Works
Steven A. Kotke, P.E.
City Engineer
Director

350 South 5th Street - Room 203
Minneapolis MN 55415

Office 612 673-2352
Fax 612 673-3565
TTY 612 673-2157

March 31, 2015

Aaron Hanauer
CPED-Planning
250 4th St. So., Room 100
Minneapolis, MN 55415

RE: Vacating a dead-end alley at 420 Hennepin Ave. E.
(Vacation 1641)

Dear Mr. Hanauer:

Public Works staff has reviewed this vacation petition and recommends Approval of said petition.

The area to be vacated are described as a dead-end alley located at 420 Hennepin Ave. E., and legally described as:

> *All that part of the alley as shown on the plat of Rearrangement of Block 11, St. Anthony Falls Addition, bounded by Lots 1, 2 and 3 and by Central Avenue.*

Sincerely,

Don Elwood, P.E.
Director, Transportation Planning & Engineering

Cc: Dennis Morris

Call 311 Minneapolis
City Information and Services

www.ci.minneapolis.mn.us

Affirmative Action Employer

Statement of Proposed Use and Project Description

TO: Minneapolis Planning Department

FROM: Patrick Sarver
Civil Site Group

DATE: 2/13/2015

RE: 420 East Hennepin – Land Use Application

The 420 East Hennepin project is proposing to construct a new commercial/retail building.

The project is located at 420 East Hennepin Avenue in Minneapolis. The project includes the demolition of the existing building and parking lot on the site to facilitate the construction of the proposed building. Parking and landscaped areas will be constructed within the property limits along with the reconstruction of adjacent city sidewalks and curb and gutters.

Patrick Sarver
Civil Site Group
952-250-2003

Mark Krogh, Java Companies **3rd**

NAME OF APPLICANT WARD

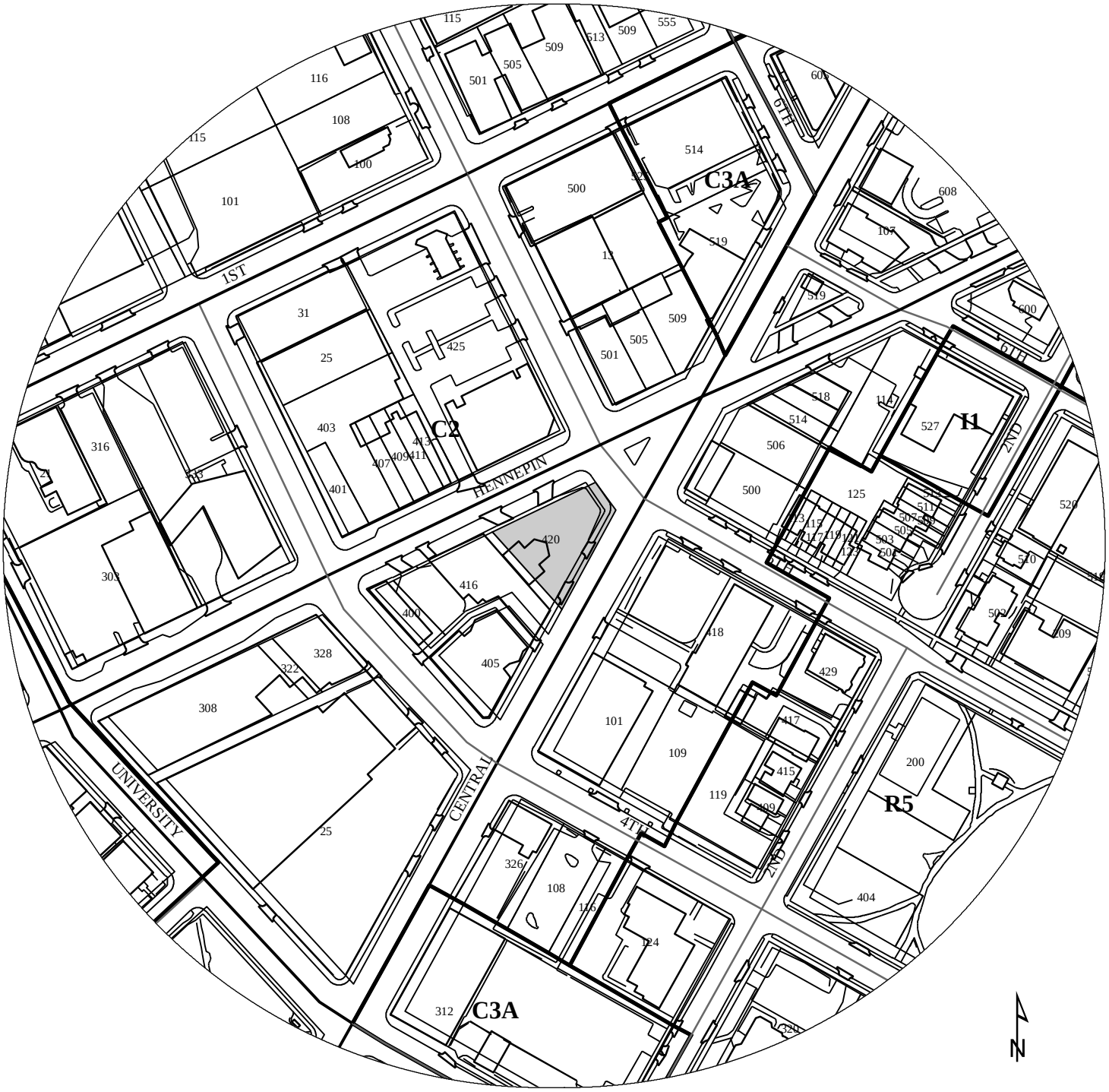

200 100 0 200 400

PROPERTY ADDRESS

420 East Hennepin Avenue

FILE NUMBER

BZZ-7062

420 EAST HENNEPIN

MINNEAPOLIS, MINNESOTA

ISSUED FOR: MODIFIED PDR

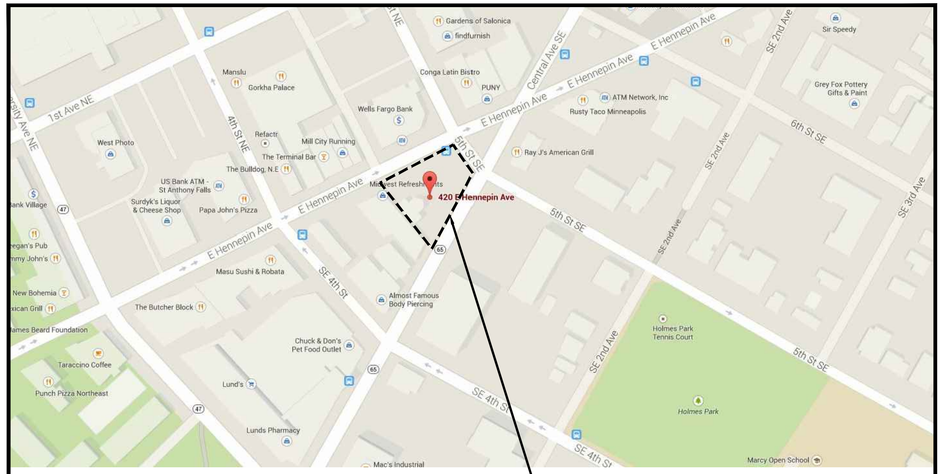

SITE LOCATION MAP

SITE LOCATION

OWNER, DEVELOPER, CONTRACTOR SIGNED STATEMENT

ALL CLEARING, GRADING, CONSTRUCTION OR DEVELOPMENT WILL BE DONE PURSUANT TO THE PLAN. SINGED BY PARTIES BELOW:

OWNER: _____

DEVELOPER: _____

CONTRACTOR: _____

DEVELOPER / PROPERTY OWNER:

420 HENNEPIN AVE E LLC
333 WASHINGTON AVENUE NORTH, SUITE 401
MINNEAPOLIS, MN 55401

ENGINEER / LANDSCAPE ARCHITECT:

CIVIL SITE GROUP
4931 W 35TH STREET
SUITE 200
ST LOUIS PARK, MN 55416
612-615-0060

SURVEYOR:

ACRE LAND SURVEYING, INC.
9140 BALTIMORE STREET NE, SUITE 100
BLAINE, MN 55449
763-458-2997

GEOTECHNICAL ENGINEER:

TBD

MASTER LEGEND:

- 932 — EX. 1' CONTOUR ELEVATION INTERVAL
- x 932.0 — EXISTING SPOT GRADE ELEVATION
- 939 — PROPOSED 1' CONTOUR ELEVATION INTERVAL
- 932.0 — SPOT GRADE ELEVATION (GUTTER/FLOW LINE UNLESS OTHERWISE NOTED)
- 932.0BC / 932.0TC — SPOT GRADE ELEVATION BACK OF CURB (TOP OF CURB)
- 932.0TW — SPOT GRADE ELEVATION TOP OF WALL
- 932.0BW — SPOT GRADE ELEVATION BOTTOM OF WALL
- DRAINAGE ARROW
- EOF — EMERGENCY OVERFLOW
- SILT FENCE / GRADING LIMIT
- INLET PROTECTION
- STABILIZED CONSTRUCTION ENTRANCE
- SOIL BORING LOCATION
- T.O. — CURB AND GUTTER (T.O = TIP OUT)
- PROPOSED MANHOLE STORM
- PROPOSED CATCH BASIN OR CATCH BASIN MANHOLE STORM
- PROPOSED GATE VALVE
- PROPOSED FIRE HYDRANT
- PROPOSED MANHOLE SANITARY
- PROPOSED SIGN
- PROPOSED LIGHT
- PROPOSED SANITARY SEWER
- PROPOSED STORM SEWER
- PROPOSED WATER MAIN
- EXISTING SANITARY SEWER
- EXISTING STORM SEWER
- EXISTING WATER MAIN
- G — EXISTING GAS MAIN
- E — EXISTING UNDERGROUND ELECTRIC
- C — EXISTING UNDERGROUND CABLE
- EXISTING MANHOLE
- EXISTING CATCH BASIN
- EXISTING HYDRANT
- EXISTING STOPBOX
- EXISTING GATE VALVE
- EXISTING ELECTRIC BOX
- EXISTING LIGHT
- EXISTING GAS METER
- EXISTING GAS VALVE

GOPHER STATE ONE CALL
WWW.GOPHERSTATEONECALL.ORG
(800) 252-1166 TOLL FREE
(651) 454-0002 LOCAL

SHEET INDEX

SHEET NUMBER	SHEET TITLE
C0.0	TITLE SHEET
C0.1	SITE SURVEY
C1.0	REMOVALS PLAN
C2.0	SITE PLAN
C3.0	GRADING PLAN
C4.0	UTILITY PLAN
C5.0	CIVIL DETAILS
C5.1	CIVIL DETAILS
C5.2	CIVIL DETAILS
C5.3	CIVIL DETAILS
L1.0	LANDSCAPE PLAN
L1.1	LANDSCAPE PLAN
SW1.0	STORM WATER POLLUTION PREVENTION PLAN - EXISTING CONDITIONS
SW1.1	STORM WATER POLLUTION PREVENTION PLAN - PROPOSED CONDITIONS
SW1.2	STORM WATER POLLUTION PREVENTION PLAN - DETAILS
SW1.3	STORM WATER POLLUTION PREVENTION PLAN - NARRATIVE

CivilSite GROUP
4931 W. 35TH ST. SUITE 200
ST. LOUIS PARK, MN 55416
CivilSiteGroup.com
Matt Pavek 763-213-3944
Pat Sarver 952-250-2003

PROJECT

420 EAST HENNEPIN

420 East Hennepin, Minneapolis, MN

420 Hennepin Ave E LLC

333 Washington Avenue North, Suite 401, Minneapolis, MN

I HEREBY CERTIFY THAT THIS PLAN, SPECIFICATION, OR REPORT WAS PREPARED BY ME OR UNDER MY DIRECT SUPERVISION AND THAT I AM A DULY LICENSED PROFESSIONAL ENGINEER UNDER THE LAWS OF THE STATE OF MINNESOTA.

Matthew R. Pavek

DATE 2/23/15 LICENSE NO. 44263

ISSUE/SUBMITTAL SUMMARY

DATE	DESCRIPTION
1/30/15	MODIFIED PDR SUBMITTAL
2/23/15	CITY SUBMITTAL

REVISION SUMMARY

DATE	DESCRIPTION

TITLE SHEET

C0.0

ALTA/ACSM LAND TITLE SURVEY

~for~ CIVIL SITE GROUP

PROPERTY ADDRESS: #420 HENNEPIN AVE. E., MIINEAPOLIS, MN 55414

P.I.D.#23-029-24-12-0131

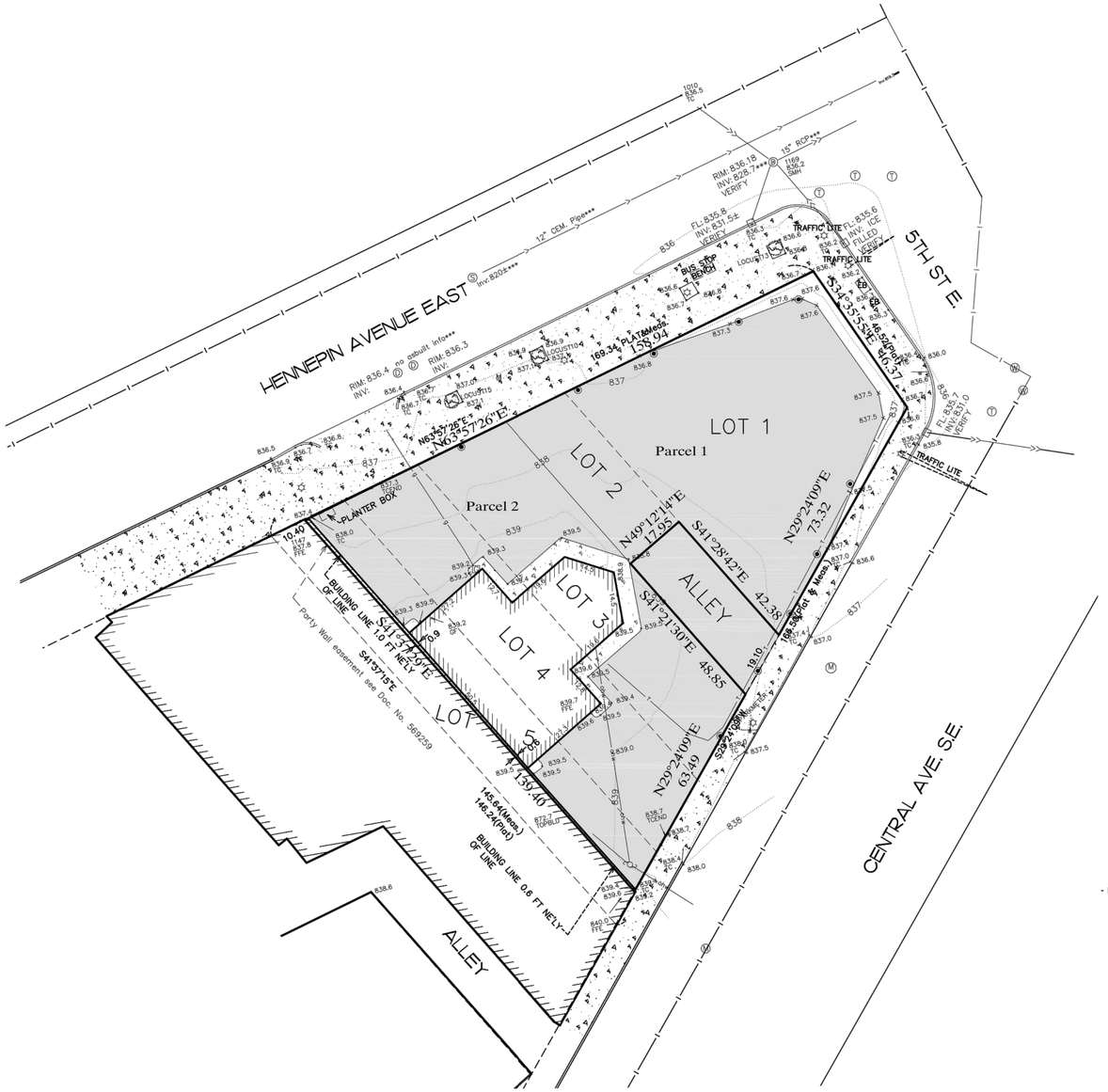

BENCHMARK

BASIS FOR ELEVATION: NAVD 88 (VIA REAL TIME GPS MEASUREMENTS UTILIZING MINNESOTA DEPARTMENT OF TRANSPORTATION VRS NETWORK)

GRAPHIC SCALE

20 0 10 20 40 80

(IN FEET)
1 inch = 20 ft.

NORTH

LEGAL DESCRIPTION

As referenced from Title Commitment No. 38898 dated 8/05/14, provided by Stewart Title Guaranty Company and issued by Commercial Partners Title, LLC

Parcel 1
Lots 1 and 2, "Rearrangement of Block 11, St. Anthony Falls", Hennepin County, Minnesota.

Abstract Property

Parcel 2
Lots 3 and 4 and that part of Lot 5, lying Northeasterly from a line commencing at a point on the Southeasterly line of Central Avenue, now called Hennepin Avenue in the City of Minneapolis; a distance, 10.4 feet Northeasterly from the most Westerly corner of said Lot 5 and running thence Southeasterly parallel with the Southwest line of said Lot 5 to the Northwesterly side of First Avenue Southeast, now called Central Avenue, which line runs through the center or party-wall, all in "Rearrangement of Block 11, St. Anthony Falls", Hennepin County, Minnesota.

Torrens Property
Torrens Certificate No. 864531

LEGEND

- Ⓢ DENOTES SANITARY SEWER MANHOLE
- Ⓓ DENOTES STORM SEWER MANHOLE
- □ DENOTES CATCH BASIN
- Ⓜ DENOTES MISCELLANEOUS MANHOLE
- Ⓣ DENOTES TELEPHONE MANHOLE
- Ⓖ DENOTES GAS METER/BOX
- ×1011.2 DENOTES EXISTING ELEVATION.
- DENOTES SIGN/PARKING METER
- DENOTES STREET LIGHT
- DENOTES BOLLARD
- ohw DENOTES OVERHEAD WIRE
- T DENOTES UNDERGROUND TELEPHONE
- I DENOTES WATERMAIN
- > DENOTES SANITARY SEWER
- >> DENOTES STORM SEWER
- DENOTES CONCRETE
- DENOTES BITUMINOUS
- DENOTES EXISTING CONTOUR
- *** DENOTES INFORMATION PER CITY AS-BUILT NEEDS TO BE VERIFIED

TABLE A NOTES

2. Title Commitment has 420 Hennepin Ave E (PID#23-029-24-12-0131)

4. The Gross Land area of Subject Property is 13,099± Sq. Ft. or 0.3± Acres.

5. The Vertical Relief is based on NAVD 88 (VIA REAL TIME GPS MEASUREMENTS UTILIZING MINNESOTA DEPARTMENT OF TRANSPORTATION VRS NETWORK).

11. Utilities shown hereon are based on observed evidence and together with gopher ticket Number 150060509. Excavations were not made during the process of this survey to locate underground utilities and/or structures. The location of underground utilities and/or structures may vary from locations shown hereon and underground utilities and/or structures may be encountered. Contact Gopher State One Call Notification Center at (651) 454-0002 for verification of utility type and field location prior to excavation.

16. There is no observable evidence of building construction or building additions within recent months. There is no observable evidence of recent street or sidewalk repairs within recent months.

18. There is no observable evidence of site use as a solid waste dump, sump or sanitary landfill.

SCHEDULE B2 NOTES

ITEM 12- THIS DOCUMENT DOES NOT CONFINE EASEMENT AREA.

ZONING & SETBACK INFORMATION

- PROPERTY ZONED C2 (Neighborhood Corridor Commercial District)

- SETBACKS BUILDING
  - See City of Minneapolis
- PARKING SETBACKS:
  - See City of Minneapolis

REVISION SUMMARY

DATE	DESCRIPTION

SITE SURVE

C0.1

VICINITY MAP

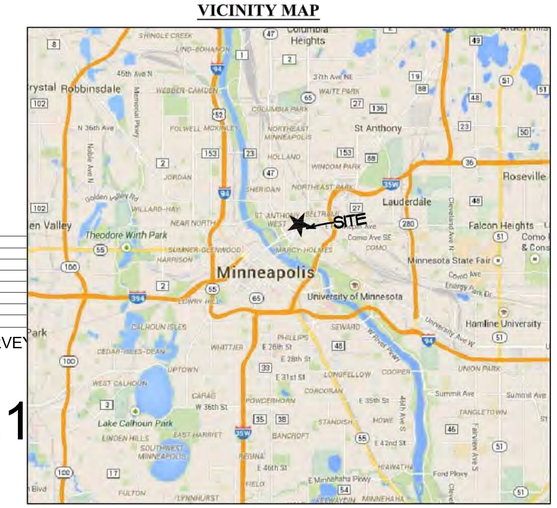

City of Minneapolis, Minnesota (No Scale)

I hereby certify to Java Capital Partners LLC, Commercial Partners Title, LLC and Stewart Title Guarnaty Company to their heirs, successors and assigns, that I have surveyed the property legally described hereon; that this survey is a true, correct and accurate drawing and representation of said property and the boundaries thereof; that this map or plat and the survey on which it is based were made in accordance with "Minimum Standard Detail Requirements for ALTA/ACSM Land Title Surveys," as jointly established and adopted by ALTA and ACSM in 2011, and includes Items 2, 4, 5, 6(a), 7(a), 8, 11(a)(b), 16 and 18 of Table A thereof, and meets the Accuracy Standards (as adopted by ALTA and ACSM and in effect on the date of this certification), and that in locating or identifying recorded easements or other recorded documents I have relied upon the Commitment for Title Insurance issued by Commercial Partners Title, LLC an agent for Stewart Title Guaranty Company, dated August 5th, 2014 file no. 38898.

Dated 1/30/2015

Michael D. Nelson, L.S. #49546

ACRE LAND SURVEYING
Serving Twin Cities Metro area and beyond
763-458-2997 acrelandsurvey@gmail.com

C:\Users\Owner\OneDrive\CAD-1D\15007Alta\dwg\15007alta.dwg 1/30/2015 1:31:44 PM CST

JOB #15007

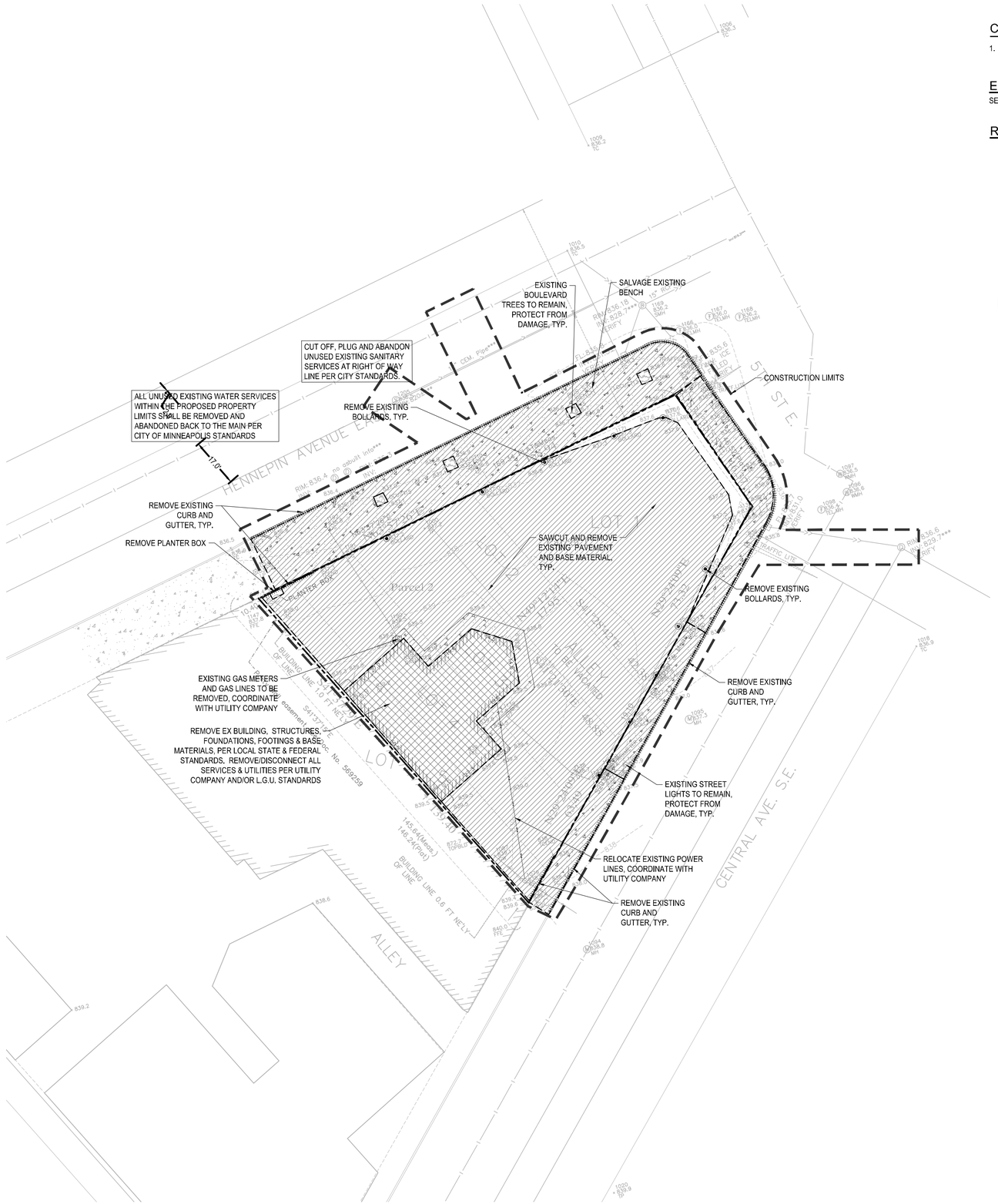
EXISTING BOULEVARD TREES TO REMAIN, PROTECT FROM DAMAGE, TYP.
SALVAGE EXISTING BENCH
CUT OFF, PLUG AND ABANDON UNUSED EXISTING SANITARY SERVICES AT RIGHT OF WAY LINE PER CITY STANDARDS.
ALL UNUSED EXISTING WATER SERVICES WITHIN THE PROPOSED PROPERTY LIMITS SHALL BE REMOVED AND ABANDONED BACK TO THE MAIN PER CITY OF MINNEAPOLIS STANDARDS
REMOVE EXISTING BOLLARDS, TYP.
CONSTRUCTION LIMITS
HENNEPIN AVENUE E.
REMOVE EXISTING CURB AND GUTTER, TYP.
REMOVE PLANTER BOX
SAWCUT AND REMOVE EXISTING PAVEMENT AND BASE MATERIAL, TYP.
REMOVE EXISTING BOLLARDS, TYP.
EXISTING GAS METERS AND GAS LINES TO BE REMOVED, COORDINATE WITH UTILITY COMPANY
REMOVE EX BUILDING, STRUCTURES, FOUNDATIONS, FOOTINGS & BASE MATERIALS, PER LOCAL STATE & FEDERAL STANDARDS. REMOVE/DISCONNECT ALL SERVICES & UTILITIES PER UTILITY COMPANY AND/OR L.G.U. STANDARDS
REMOVE EXISTING CURB AND GUTTER, TYP.
EXISTING STREET LIGHTS TO REMAIN, PROTECT FROM DAMAGE, TYP.
RELOCATE EXISTING POWER LINES, COORDINATE WITH UTILITY COMPANY
REMOVE EXISTING CURB AND GUTTER, TYP.
CENTRAL AVE. S.E.
ALLEY
Parcel 2
LOT 1
LOT 2
LOT 3
LOT 4
LOT 5
LOT 6
LOT 7
LOT 8
LOT 9
LOT 10
LOT 11
LOT 12
LOT 13
LOT 14
LOT 15
LOT 16
LOT 17
LOT 18
LOT 19
LOT 20
LOT

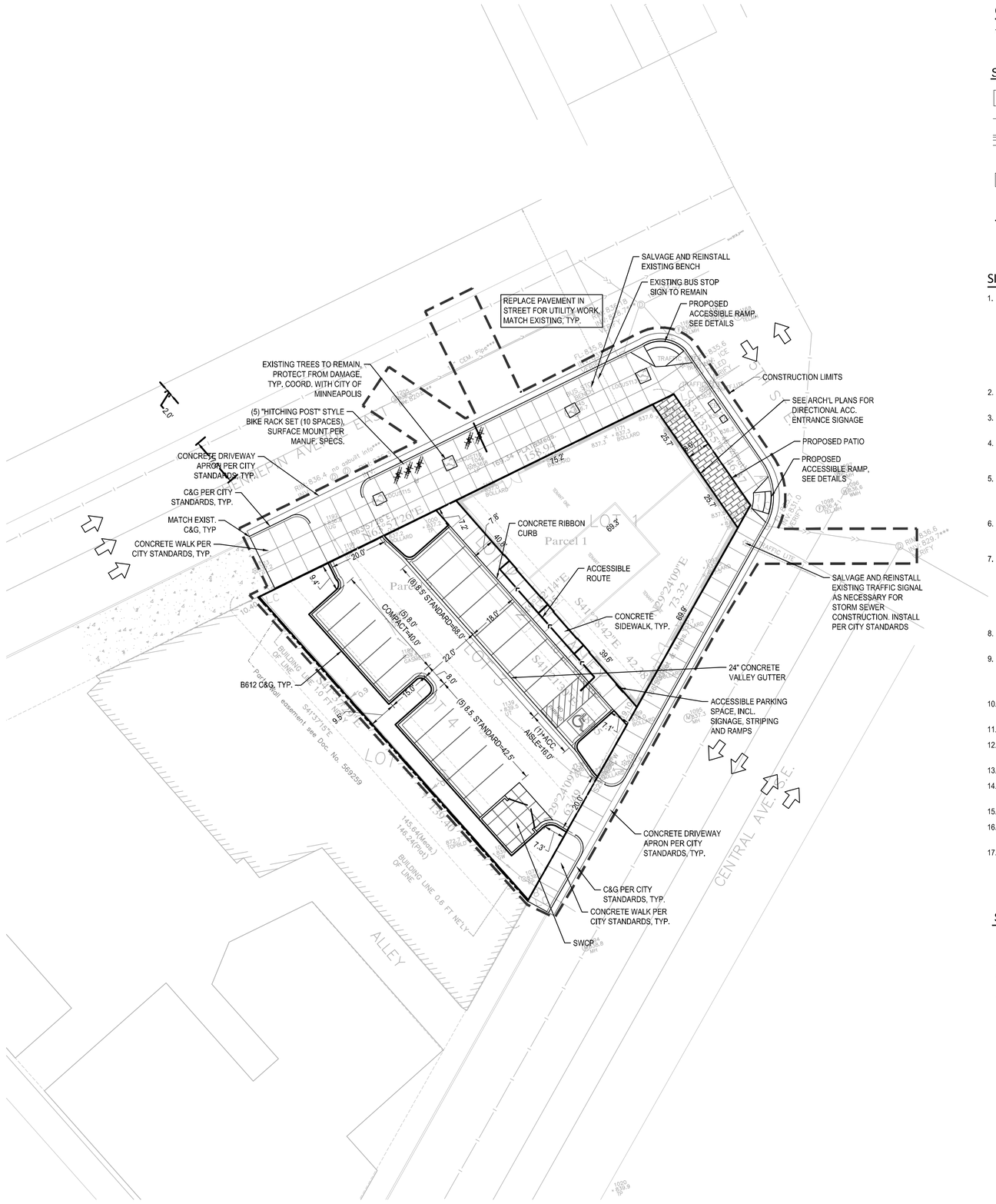

CITY OF MINNEAPOLIS SITE SPECIFIC NOTES:

1. RESERVED FOR CITY SPECIFIC NOTES.

SITE PLAN LEGEND:

- CONCRETE PAVEMENT AS SPECIFIED (PAD OR WALK)
- PROPERTY LINE
- CURB AND GUTTER-SEE NOTES (T.O.) TIP OUT GUTTER WHERE APPLICABLE-SEE PLAN
- TRAFFIC DIRECTIONAL ARROWS
- SIGN AND POST ASSEMBLY. SHOP DRAWINGS REQUIRED. HC = ACCESSIBLE SIGN NP = NO PARKING FIRE LANE ST = STOP CP = COMPACT CAR PARKING ONLY

SITE LAYOUT NOTES:

1. CONTRACTOR SHALL VERIFY LOCATIONS AND LAYOUT OF ALL SITE ELEMENTS PRIOR TO BEGINNING CONSTRUCTION, INCLUDING BUT NOT LIMITED TO, LOCATIONS OF EXISTING AND PROPOSED PROPERTY LINES, EASEMENTS, SETBACKS, UTILITIES, BUILDINGS AND PAVEMENTS. CONTRACTOR IS RESPONSIBLE FOR FINAL LOCATIONS OF ALL ELEMENTS FOR THE SITE. ANY REVISIONS REQUIRED AFTER COMMENCEMENT OF CONSTRUCTION, DUE TO LOCATIONAL ADJUSTMENTS SHALL BE CORRECTED AT NO ADDITIONAL COST TO OWNER. ADJUSTMENTS TO THE LAYOUT SHALL BE APPROVED BY THE ENGINEER/LANDSCAPE ARCHITECT PRIOR TO INSTALLATION OF MATERIALS. STAKE LAYOUT FOR APPROVAL.
2. THE CONTRACTOR SHALL OBTAIN ALL NECESSARY PERMITS PRIOR TO CONSTRUCTION, INCLUDING A RIGHT-OF-WAY AND STREET OPENING PERMIT.
3. THE CONTRACTOR SHALL VERIFY RECOMMENDATIONS NOTED IN THE GEO TECHNICAL REPORT PRIOR TO INSTALLATION OF SITE IMPROVEMENT MATERIALS.
4. CONTRACTOR SHALL FIELD VERIFY COORDINATES AND LOCATION DIMENSIONS OF THE BUILDING AND STAKE FOR REVIEW AND APPROVAL BY THE OWNERS REPRESENTATIVE PRIOR TO INSTALLATION OF FOOTING MATERIALS.
5. LOCATIONS OF STRUCTURES, ROADWAY PAVEMENTS, CURBS AND GUTTERS, BOLLARDS, AND WALKS ARE APPROXIMATE AND SHALL BE STAKED IN THE FIELD, PRIOR TO INSTALLATION, FOR REVIEW AND APPROVAL BY THE ENGINEER/LANDSCAPE ARCHITECT.
6. CURB DIMENSIONS SHOWN ARE TO FACE OF CURB. BUILDING DIMENSIONS ARE TO FACE OF CONCRETE FOUNDATION. LOCATION OF BUILDING IS TO BUILDING FOUNDATION AND SHALL BE AS SHOWN ON THE DRAWINGS.
7. THE CONTRACTOR SHALL SUBMIT SHOP DRAWINGS OR SAMPLES AS SPECIFIED FOR REVIEW AND APPROVAL BY THE ENGINEER/LANDSCAPE ARCHITECT PRIOR TO FABRICATION FOR ALL PREFABRICATED SITE IMPROVEMENT MATERIALS SUCH AS, BUT NOT LIMITED TO THE FOLLOWING, FURNISHINGS, PAVEMENTS, WALLS, RAILINGS, BENCHES, FLAGPOLES, LANDING PADS FOR CURB RAMPS, AND LIGHT AND POLES. THE OWNER RESERVES THE RIGHT TO REJECT INSTALLED MATERIALS NOT PREVIOUSLY APPROVED.
8. PEDESTRIAN CURB RAMPS SHALL BE CONSTRUCTED WITH TRUNCATED DOME LANDING AREAS IN ACCORDANCE WITH A.D.A. REQUIREMENTS-SEE DETAIL.
9. CROSSWALK STRIPING SHALL BE 24" WIDE WHITE PAINTED LINE, SPACED 48" ON CENTER PERPENDICULAR TO THE FLOW OF TRAFFIC. WIDTH OF CROSSWALK SHALL BE 5' WIDE. ALL OTHER PAVEMENT MARKINGS SHALL BE WHITE IN COLOR UNLESS OTHERWISE NOTED OR REQUIRED BY ADA OR LOCAL GOVERNING BODIES.
10. CURB AND GUTTER TYPE SHALL BE B612 UNLESS OTHERWISE NOTED ON THE DRAWINGS-TAPER BETWEEN CURB TYPES-SEE DETAIL.
11. ALL CURB RADII ARE MINIMUM 3' UNLESS OTHERWISE NOTED.
12. CONTRACTOR SHALL REFER TO FINAL PLAT FOR LOT BOUNDARIES, NUMBERS, AREAS AND DIMENSIONS PRIOR TO SITE IMPROVEMENTS.
13. FIELD VERIFY ALL EXISTING SITE CONDITIONS, DIMENSIONS.
14. PARKING IS TO BE SET PARALLEL OR PERPENDICULAR TO EXISTING BUILDING UNLESS NOTED OTHERWISE.
15. ALL PARKING LOT PAINT STRIPPING TO BE WHITE, 4" WIDE TYP.
16. BITUMINOUS PAVING TO BE "LIGHT DUTY" UNLESS OTHERWISE NOTED. SEE DETAIL SHEETS FOR PAVEMENT SECTIONS.
17. ALL TREES THAT ARE TO REMAIN ARE TO BE PROTECTED FROM DAMAGE WITH A CONSTRUCTION FENCE AT THE DRIP LINE. SEE LANDSCAPE DOCUMENTS.

SITE AREA CALCULATIONS:

	EXISTING		PROPOSED	
BUILDING COVERAGE	1,958 SF	14.1%	5,050 SF	36.4%
ALL PAVEMENTS	11,409 SF	82.3%	7,022 SF	50.6%
ALL NON-PAVEMENTS	500 SF	3.6%	1,795 SF	12.9%
TOTAL SITE AREA	13,867 SF	100.0%	13,867 SF	100.0%
IMPERVIOUS SURFACE				
EXISTING CONDITION	13,367 SF	96.4%		
PROPOSED CONDITION	12,072 SF	87.1%		
DIFFERENCE	-1,295 SF	-9.3%		

OWNER INFORMATION

OWNER: 420 HENNEPIN AVE E LLC
333 WASHINGTON AVENUE NORTH, SUITE 401
MINNEAPOLIS, MN 55401

OPERATIONAL NOTES:

1. ALL SNOW WILL EITHER BE PLOWED TO LANDSCAPE AREAS OR REMOVED FROM SITE AT EACH PLOWING.
2. TRASH STORAGE WILL BE PROVIDED IN THE ONSITE SOLID WASTE COLLECTION POINT AS IDENTIFIED ON THE PLANS. SOLID WASTE DISPOSAL TRUCKS WILL PULL IN TO THE PARKING AREA AND THE SOLID WASTE BINS WILL BE ROLLED OUT INTO THE DRIVE LANE FOR LOADING AND DISPOSAL. NO TRUCK TURNING WILL BE REQUIRED.

CITY COORDINATION NOTES:

1. TRAFFIC & PARKING

1.1. COORDINATE WITH BILL PRINCE, CITY OF MINNEAPOLIS, (612) 673-3901 FOR ALL WORK REGARDING STREET LIGHTING AND ELECTRICAL SYSTEMS. STREET LIGHTING INSTALLED AS PART OF THE PROJECT SHALL BE INSPECTED BY THE CITY, CONTACT DAVE PREHALL (612) 673-5759. ANY LIGHTING INSTALLATIONS NOT MEETING CITY SPECIFICATIONS WILL BE REQUIRED TO BE REINSTALLED AT CONTRACTOR'S EXPENSE.

1.2. COORDINATE WITH BOB BOBLETT CITY OF MINNEAPOLIS, (612) 673-2428 FOR ALL ISSUES REGARDING WORK IN AND ADJACENT TO CITY RIGHTS-OF-WAY. AN ENCROACHMENT PERMIT SHALL BE REQUIRED FOR ALL STREETSCAPE ELEMENTS IN THE PUBLIC ROW. ANY ELEMENTS OF AN EARTH RETENTION SYSTEM AND RELATED OPERATIONS WILL REQUIRE AN ENCROACHMENT PERMIT. ANY EXCAVATIONS THAT FALL WITHIN THE PUBLIC ROW WILL REQUIRE A ROW EXCAVATION PERMIT.

1.3. COORDINATE WITH SCOTT KRAMER, CITY OF MINNEAPOLIS, (612) 673-2383 REGARDING ANY WORK THAT IS PERFORMED IN THE RIGHT-OF-WAY. AN OBSTRUCTION PERMIT WILL BE REQUIRED FOR ALL WORK IN THE RIGHT-OF-WAY. CONTACT SCOTT KRAMER REGARDING DETAILS OF SIDEWALK AND LANE CLOSURES.

1.4. COORDINATE WITH CRAIG PINKALLA, CITY OF MINNEAPOLIS, (612) 499-9233 FOR ALL WORK REGARDING REMOVAL OR PROTECTION OF TREES DURING CONSTRUCTION IN THE CITY RIGHT-OF-WAY.

1.5. COORDINATE WITH PAUL CAO, CITY OF MINNEAPOLIS, (612) 673-2943 FOR ALL WORK REGARDING BIKE RACKS IN THE CITY RIGHT-OF-WAY.

1.6. COORDINATE WITH ALLAN KLUGMAN, CITY OF MINNEAPOLIS, (612) 673-5750 PRIOR TO CONSTRUCTION FOR THE TEMPORARY REMOVAL/RELOCATION OF ANY CITY OF MINNEAPOLIS SIGNAL SYSTEM. ALL COSTS FOR RELOCATION AND/OR REPAIR OF CITY TRAFFIC SHALL BE BORNE BY THE CONTRACTOR.

1.7. COORDINATE WITH DOUG MADAY, CITY OF MINNEPOLIS, (612) 673-5755 PRIOR TO CONSTRUCTION FOR THE REMOVAL OR RELOCATION OF ANY CITY OF MINNEAPOLIS RIGHT-OF-WAY SIGNS.

2. ENVIRONMENTAL HEALTH

2.1. COORDINATE WITH ENVIRONMENTAL SERVICES, CITY OF MINNEAPOLIS, (612) 673-3867 FOR PERMITS RELATING TO AFTER HOURS WORK, TEMPORARY STORAGE OF IMPACTED SOILS ON SITE PRIOR TO DISPOSAL OR REUSE, REMEDIATION OF CONTAMINATED SOIL AND GROUNDWATER, REUSE OF IMPACTED SOILS ON SITE, DEWATERING AND DISCHARGE OF ACCUMULATED STORM WATER OR GROUND WATER TO CITY SEWERS, FLAMMABLE WASTE TRAPS, UNDERGROUND OR ABOVEGROUND TANK INSTALLATION OR REMOVAL, WELL CONSTRUCTION OR SEALING, OR ON-SITE ROCK CRUSHING.

2.2. NO CONSTRUCTION, DEMOLITION OR COMMERCIAL POWER MAINTENANCE EQUIPMENT SHALL BE OPERATED WITHIN THE CITY BETWEEN THE HOURS OF 6:00 PM AND 7:00 AM ON WEEKDAYS OR DURING ANY HOURS ON SATURDAYS, SUNDAYS AND STATE AND FEDERAL HOLIDAYS, EXCEPT UNDER PERMIT.

2.3. IF CONTAMINATED SOIL IS ENCOUNTERED, IT MUST BE REPORTED TO THE MINNESOTA DUTY OFFICER AT (651) 649-5451. PREAPPROVAL FOR REMOVAL OR REUSE MUST OCCUR FROM THE MPCA AND THE CITY OF MINNEAPOLIS.

3. FORESTRY DEPARTMENT

3.1. TO PROTECT ROOT ZONES, NO CONSTRUCTION EQUIPMENT OR MATERIALS SHALL BE PLACED, PARKED, OR STORED ON ANY UNPAVED AREA WITHIN THE DRIP LINE OF ANY CITY OWNED TREE. NO CHEMICALS OR PETROLEUM PRODUCTS SHALL BE DEPOSITED ON ANY UNPAVED AREA IN THE CITY RIGHT-OF-WAY.

3.2. ANY TREE ROOTS ENCOUNTERED ARE TO BE CLEANLY CUT USING HAND TOOLS.

3.3. NO OPEN EXCAVATION OR BORE PITS ALLOWED WITHIN 8 FEET OF CITY STREET TREES.

3.4. CARE SHALL BE TAKEN NOT TO DAMAGE TREE TRUNKS OR BRANCHES. CONTRACTOR MUST CONTACT FORESTRY DEPARTMENT INSPECTION AT (612) 499-9233 AT LEAST 3 DAYS PRIOR TO STARTING WORK TO DISCUSS PROBLEMS OF OVERHANGING BRANCHES THAT MAY BE DAMAGED.

GOPHER STATE ONE CALL
WWW.GOPHERSTATEONECALL.ORG
(800) 252-1166 TOLL FREE
(651) 454-0002 LOCAL

N
1" = 20'-0"
10'-0" 0 20'-0" 20 ft

CivilSite GROUP
4931 W. 35TH ST. SUITE 200
ST. LOUIS PARK, MN 55416
CivilSiteGroup.com
Matt Pavek 763-213-3944
Pat Sarver 952-250-2003

PROJECT
420 EAST HENNEPIN
420 East Hennepin, Minneapolis, MN
420 Hennepin Ave E LLC
333 Washington Avenue North, Suite 401, Minneapolis, MN

I HEREBY CERTIFY THAT THIS PLAN, SPECIFICATION, OR REPORT WAS PREPARED BY ME OR UNDER MY DIRECT SUPERVISION AND THAT I AM A DULY LICENSED PROFESSIONAL ENGINEER UNDER THE LAWS OF THE STATE OF MINNESOTA.

Matthew R. Pavek
DATE 2/23/15 LICENSE NO. 44263

ISSUE/SUBMITTAL SUMMARY

DATE	DESCRIPTION
1/30/15	MODIFIED PDR SUBMITTAL
2/23/15	CITY SUBMITTAL

REVISION SUMMARY

DATE	DESCRIPTION

SITE PLAN

C2.0

NON STORM WATER DISCHARGES:

THERE ARE NO KNOWN NON-STORM WATER DISCHARGES ON THE EXISTING SITE AND NONE ARE PROPOSED AS PART OF THIS DEVELOPMENT.

GROUNDWATER STATEMENT:

THIS PROJECT DOES NOT PROPOSE ANY PERMANENT GROUNDWATER DISCHARGE TO THE STORM WATER SYSTEM.

OWNER, DEVELOPER, CONTRACTOR SIGNED STATEMENT

ALL CLEARING, GRADING, CONSTRUCTION OR DEVELOPMENT WILL BE DONE PURSUANT TO THE PLAN. SINGED BY PARTIES BELOW:

OWNER: _____

DEVELOPER: _____

CONTRACTOR: _____

GRADING PLAN LEGEND:

891	EX. 1' CONTOUR ELEVATION INTERVAL
819	1.0' CONTOUR ELEVATION INTERVAL
891.0	SPOT GRADE ELEVATION (FLOW LINE UNLESS OTHERWISE NOTED)
891.0 G	SPOT GRADE ELEVATION GUTTER
891.0 BC	SPOT GRADE ELEVATION BACK OF CURB (TOP OF CURB)
891.0 BS/TS	SPOT GRADE ELEVATION BOTTOM OF STAIRS/TOP OF STAIRS
T.O.	TIP OUT (T.O.) CURB AND GUTTER WHERE APPLICABLE - TAPER GUTTERS TO DRAIN AS SHOWN
	EXISTING AND PROPOSED DRAINAGE ARROWS

CITY OF MINNEAPOLIS GRADING NOTES:

1. RESERVED FOR CITY SPECIFIC GRADING NOTES.

EROSION CONTROL NOTES:

SEE SWPPP ON SHEETS SW1.0-SW1.3

GROUNDWATER INFORMATION:

PER GEOTECHNICAL REPORT BY XXXXX, INC., DATED XX-XX-XX GROUNDWATER WAS OBSERVED AT ELEVATIONS RANGING FROM XXX.XX TO XXX.XX

THE BORINGS & GROUNDWATER ARE AS FOLLOWS:

B-1	XXX.XX
B-2	XXX.XX
B-3	XXX.XX
B-4	XXX.XX

PROPOSED FOOTING DRAIN TILE INVERT ELEVATION = XXX.XX

GENERAL GRADING NOTES:

1. SEE SITE PLAN FOR HORIZONTAL LAYOUT & GENERAL GRADING NOTES.
2. THE CONTRACTOR SHALL COMPLETE THE SITE GRADING CONSTRUCTION (INCLUDING BUT NOT LIMITED TO SITE PREPARATION, SOIL CORRECTION, EXCAVATION, EMBANKMENT, ETC.) IN ACCORDANCE WITH THE REQUIREMENTS OF THE OWNER'S SOILS ENGINEER, ALL SOIL TESTING SHALL BE COMPLETED BY THE OWNER'S SOILS ENGINEER. THE CONTRACTOR SHALL BE RESPONSIBLE FOR COORDINATING ALL REQUIRED SOIL TESTS AND INSPECTIONS WITH THE SOILS ENGINEER.
3. GRADING AND EXCAVATION ACTIVITIES SHALL BE PERFORMED IN ACCORDANCE WITH THE NATIONAL POLLUTION DISCHARGE ELIMINATION SYSTEM (NPDES) PERMIT REQUIREMENTS & PERMIT REQUIREMENTS OF THE CITY.
4. PROPOSED SPOT GRADES ARE FLOW-LINE FINISHED GRADE ELEVATIONS, UNLESS OTHERWISE NOTED.
5. GRADES OF WALKS SHALL BE INSTALLED WITH 5% MAX. LONGITUDINAL SLOPE AND 1% MIN. AND 2% MAX. CROSS SLOPE, UNLESS OTHERWISE NOTED.
6. PROPOSED SLOPES SHALL NOT EXCEED 3:1 UNLESS INDICATED OTHERWISE ON THE DRAWINGS. MAXIMUM SLOPES IN MAINTAINED AREAS IS 4:1
7. PROPOSED RETAINING WALLS, FREESTANDING WALLS, OR COMBINATION OF WALL TYPES GREATER THAN 4' IN HEIGHT SHALL BE DESIGNED AND ENGINEERED BY A REGISTERED RETAINING WALL ENGINEER. DESIGN DRAWINGS SHALL BE SUBMITTED FOR REVIEW AND APPROVAL PRIOR TO CONSTRUCTION.
8. THE CONTRACTOR SHALL BE RESPONSIBLE FOR MAINTENANCE OF GRADE STAKES THROUGHOUT THE DURATION OF CONSTRUCTION TO ESTABLISH PROPER GRADES. THE CONTRACTOR SHALL ALSO BE RESPONSIBLE FOR A FINAL FIELD CHECK OF FINISHED GRADES ACCEPTABLE TO THE ENGINEER/LANDSCAPE ARCHITECT PRIOR TO TOPSOIL AND SODDING ACTIVITIES.
9. IF EXCESS OR SHORTAGE OF SOIL MATERIAL EXISTS, THE CONTRACTOR SHALL TRANSPORT ALL EXCESS SOIL MATERIAL OFF THE SITE TO AN AREA SELECTED BY THE CONTRACTOR, OR IMPORT SUITABLE MATERIAL TO THE SITE.
10. EXCAVATE TOPSOIL FROM AREAS TO BE FURTHER EXCAVATED OR REGRADED AND STOCKPILE IN AREAS DESIGNATED ON THE SITE. THE CONTRACTOR SHALL SALVAGE ENOUGH TOPSOIL FOR RESPREADING ON THE SITE AS SPECIFIED. EXCESS TOPSOIL SHALL BE PLACED IN EMBANKMENT AREAS, OUTSIDE OF BUILDING PADS, ROADWAYS AND PARKING AREAS. THE CONTRACTOR SHALL SUBCUT CUT AREAS, WHERE TURF IS TO BE ESTABLISHED, TO A DEPTH OF 6 INCHES. RESPREAD TOPSOIL IN AREAS WHERE TURF IS TO BE ESTABLISHED TO A MINIMUM DEPTH OF 6 INCHES.
11. FINISHED GRADING SHALL BE COMPLETED. THE CONTRACTOR SHALL UNIFORMLY GRADE AREAS WITHIN LIMITS OF GRADING, INCLUDING ADJACENT TRANSITION AREAS. PROVIDE A SMOOTH FINISHED SURFACE WITHIN SPECIFIED TOLERANCES, WITH UNIFORM LEVELS OR SLOPES BETWEEN POINTS WHERE ELEVATIONS ARE SHOWN, OR BETWEEN SUCH POINTS AND EXISTING GRADES. AREAS THAT HAVE BEEN FINISH GRADED SHALL BE PROTECTED FROM SUBSEQUENT CONSTRUCTION OPERATIONS, TRAFFIC AND EROSION. REPAIR ALL AREAS THAT HAVE BECOME RUTTED BY TRAFFIC OR ERODED BY WATER OR HAS SETTLED BELOW THE CORRECT GRADE. ALL AREAS DISTURBED BY THE CONTRACTOR'S OPERATIONS SHALL BE RESTORED TO EQUAL OR BETTER THAN ORIGINAL CONDITION OR TO THE REQUIREMENTS OF THE NEW WORK.
12. PRIOR TO PLACEMENT OF THE AGGREGATE BASE, A TEST ROLL WILL BE REQUIRED ON THE STREET AND/OR PARKING AREA SUBGRADE. THE CONTRACTOR SHALL PROVIDE A LOADED TANDEM AXLE TRUCK WITH A GROSS WEIGHT OF 25 TONS. THE TEST ROLLING SHALL BE AT THE DIRECTION OF THE SOILS ENGINEER AND SHALL BE COMPLETED IN AREAS AS DIRECTED BY THE SOILS ENGINEER. THE SOILS ENGINEER SHALL DETERMINE WHICH SECTIONS OF THE STREET OR PARKING AREA ARE UNSTABLE. CORRECTION OF THE SUBGRADE SOILS SHALL BE COMPLETED IN ACCORDANCE WITH THE REQUIREMENTS OF THE SOILS ENGINEER.
13. TOLERANCES
    - 13.1. THE BUILDING SUBGRADE FINISHED SURFACE ELEVATION SHALL NOT VARY BY MORE THAN 0.30 FOOT ABOVE, OR 0.30 FOOT BELOW, THE PRESCRIBED ELEVATION AT ANY POINT WHERE MEASUREMENT IS MADE.
    - 13.2. THE STREET OR PARKING AREA SUBGRADE FINISHED SURFACE ELEVATION SHALL NOT VARY BY MORE THAN 0.05 FOOT ABOVE, OR 0.10 FOOT BELOW, THE PRESCRIBED ELEVATION OF ANY POINT WHERE MEASUREMENT IS MADE.
    - 13.3. AREAS WHICH ARE TO RECEIVE TOPSOIL SHALL BE GRADED TO WITHIN 0.30 FOOT ABOVE OR BELOW THE REQUIRED ELEVATION, UNLESS DIRECTED OTHERWISE BY THE ENGINEER.
    - 13.4. TOPSOIL SHALL BE GRADED TO PLUS OR MINUS 1/2 INCH OF THE SPECIFIED THICKNESS.
14. MAINTENANCE
    - 14.1. THE CONTRACTOR SHALL PROTECT NEWLY GRADED AREAS FROM TRAFFIC AND EROSION, AND KEEP AREA FREE OF TRASH AND DEBRIS.
    - 14.2. CONTRACTOR SHALL REPAIR AND REESTABLISH GRADES IN SETTLED, ERODED AND RUTTED AREAS TO SPECIFIED TOLERANCES. DURING THE CONSTRUCTION, IF REQUIRED, AND DURING THE WARRANTY PERIOD, ERODED AREAS WHERE TURF IS TO BE ESTABLISHED SHALL BE RESEEDED AND MULCHED.
    - 14.3. WHERE COMPLETED COMPACTED AREAS ARE DISTURBED BY SUBSEQUENT CONSTRUCTION OPERATIONS OR ADVERSE WEATHER, CONTRACTOR SHALL SCARIFY, SURFACE, RESHAPE, AND COMPACT TO REQUIRED DENSITY PRIOR TO FURTHER CONSTRUCTION.

GOPHER STATE ONE CALL
WWW.GOPHERSTATEONECALL.ORG
(800) 252-1166 TOLL FREE
(651) 454-0002 LOCAL

N

1" = 20'-0"
10'-0" 0 20'-0"

CivilSite GROUP
4931 W. 35TH ST. SUITE 200
ST. LOUIS PARK, MN 55416
CivilSiteGroup.com
Matt Pavek 763-213-3944
Pat Sarver 952-250-2003

PROJECT

420 EAST HENNEPIN

420 East Hennepin, Minneapolis, MN

420 Hennepin Ave E LLC

333 Washington Avenue North, Suite 401, Minneapolis, MN

I HEREBY CERTIFY THAT THIS PLAN, SPECIFICATION, OR REPORT WAS PREPARED BY ME OR UNDER MY DIRECT SUPERVISION AND THAT I AM A DULY LICENSED PROFESSIONAL ENGINEER UNDER THE LAWS OF THE STATE OF MINNESOTA.

Matthew R. Pavek

DATE 2/23/15 LICENSE NO. 44263

ISSUE/SUBMITTAL SUMMARY

DATE	DESCRIPTION
1/30/15	MODIFIED PDR SUBMITTAL
2/23/15	CITY SUBMITTAL

REVISION SUMMARY

DATE	DESCRIPTION

GRADING PLAN

C3.0

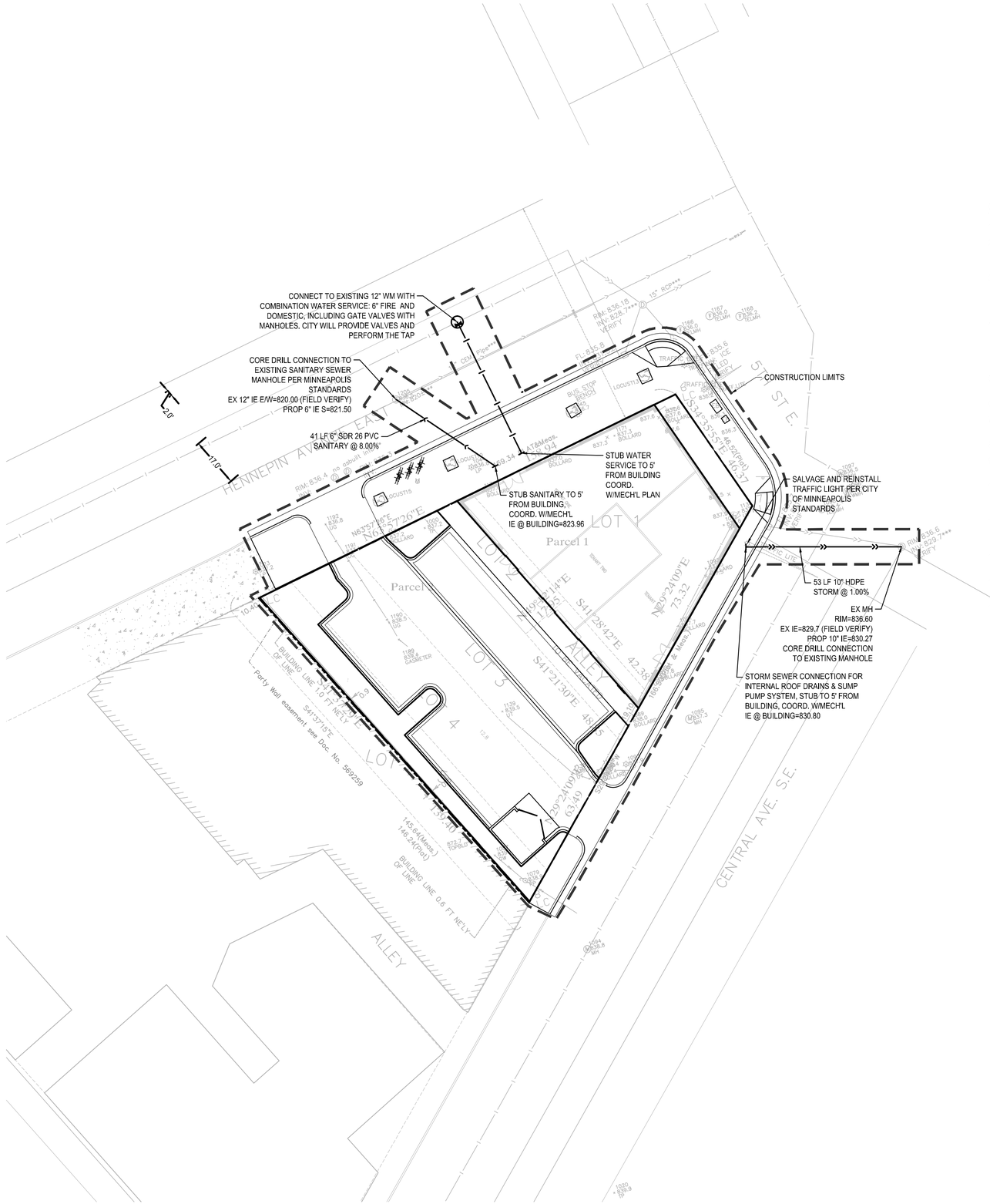

CITY OF MINNEAPOLIS UTILITY NOTES:

1. RESERVED FOR CITY SPECIFIC UTILITY NOTES.

UTILITY LEGEND:

- MANHOLE OR CATCH BASIN
- MANHOLE OR CATCH BASIN
- WATER MAIN
- SANITARY SEWER
- STORM SEWER

GENERAL UTILITY NOTES:

1. SEE SITE PLAN FOR HORIZONTAL DIMENSIONS AND LAYOUT.
2. CONTRACTOR SHALL FIELD VERIFY LOCATION AND ELEVATION OF EXISTING UTILITIES AND TOPOGRAPHIC FEATURES PRIOR TO CONSTRUCTION. THE CONTRACTOR SHALL IMMEDIATELY NOTIFY THE ENGINEER OF DISCREPANCIES OR VARIATIONS FROM THE PLANS.
3. ALL EXISTING UTILITY LOCATIONS SHOWN ARE APPROXIMATE. CONTACT "GOPHER STATE ONE CALL" (651-454-0002 OR 800-252-1166) FOR UTILITY LOCATIONS, 48 HOURS PRIOR TO CONSTRUCTION. THE CONTRACTOR SHALL REPAIR OR REPLACE ANY UTILTIES THAT ARE DAMAGED DURING CONSTRUCTION AT NO COST TO THE OWNER.
4. UTILITY INSTALLATION SHALL CONFORM TO THE CURRENT EDITION OF "STANDARD SPECIFICATIONS FOR WATER MAIN AND SERVICE LINE INSTALLATION" AND "SANITARY SEWER AND STORM SEWER INSTALLATION" AS PREPARED BY THE CITY ENGINEERS ASSOCIATION OF MINNESOTA (CEAM), AND SHALL CONFORM WITH THE REQUIREMENTS OF THE CITY AND THE PROJECT SPECIFICATIONS.
5. CASTINGS SHALL BE SALVAGED FROM STRUCTURE REMOVALS AND RE-USED OR PLACED AT THE DIRECTION OF THE OWNER.
6. ALL WATER PIPE SHALL BE CLASS 52 DUCTILE IRON PIPE (DIP) UNLESS OTHERWISE NOTED.
7. ALL SANITARY SEWER SHALL BE SDR 26 POLYVINYL CHLORIDE (PVC) UNLESS OTHERWISE NOTED.
8. ALL STORM SEWER PIPE SHALL BE HDPE UNLESS OTHERWISE NOTED.
9. PIPE LENGTHS SHOWN ARE FROM CENTER TO CENTER OF STRUCTURE OR TO END OF FLARED END SECTION.
10. UTILTIES ON THE PLAN ARE SHOWN TO WITHIN 5' OF THE BUILDING FOOTPRINT. THE CONTRACTOR IS ULTIMATELY RESPONSIBLE FOR THE FINAL CONNECTION TO BUILDING LINES. COORDINATE WITH ARCHITECTURAL AND MECHANICAL PLANS.
11. CATCH BASINS AND MANHOLES IN PAVED AREAS SHALL BE SUMPED 0.04 FEET. ALL CATCH BASINS IN GUTTERS SHALL BE SUMPED 0.15 FEET PER DETAILS. RIM ELEVATIONS SHOWN ON THIS PLAN DO NOT REFLECT SUMPED ELEVATIONS.
12. ALL FIRE HYDRANTS SHALL BE LOCATED 5 FEET BEHIND BACK OF CURB UNLESS OTHERWISE NOTED.
13. HYDRANT TYPE, VALVE, AND CONNECTION SHALL BE IN ACCORDANCE WITH CITY REQUIREMENTS. HYDRANT EXTENSIONS ARE INCIDENTAL.
14. A MINIMUM OF 8 FEET OF COVER IS REQUIRED OVER ALL WATERMAIN, UNLESS OTHERWISE NOTED. EXTRA DEPTH MAY BE REQUIRED TO MAINTAIN A MINIMUM OF 18" VERTICAL SEPARATION TO SANITARY OR STORM SEWER LINES. EXTRA DEPTH WATERMAIN IS INCIDENTAL.
15. A MINIMUM OF 18 INCHES OF VERTICAL SEPARATION AND 10 FEET OF HORIZONTAL SEPARATION IS REQUIRED FOR ALL UTILITIES, UNLESS OTHERWISE NOTED.
16. ALL CONNECTIONS TO EXISTING UTILITIES SHALL BE IN ACCORDANCE WITH CITY STANDARDS AND COORDINATED WITH THE CITY PRIOR TO CONSTRUCTION.
17. CONNECTIONS TO EXISTING STRUCUTRES SHALL BE CORE-DRILLED.
18. COORDINATE LOCATIONS AND SIZES OF SERVICE CONNECTIONS WITH THE MECHANICAL DRAWINGS.
19. COORDINATE INSTALLATION AND SCHEDULING OF THE INSTALLATION OF UTILITIES WITH ADJACENT CONTRACTORS AND CITY STAFF.
20. ALL STREET REPAIRS AND PATCHING SHALL BE PERFORMED PER THE REQUIREMENTS OF THE CITY. ALL PAVEMENT CONNECTIONS SHALL BE SAWCUT. ALL TRAFFIC CONTROLS SHALL BE PROVIDED BY THE CONTRACTOR AND SHALL BE ESTABLISHED PER THE REQUIREMENTS OF THE MINNESOTA MANUAL ON UNIFORM TRAFFIC CONTROL DEVICES (MMUTCD) AND THE CITY. THIS SHALL INCLUDE BUT NOT BE LIMITED TO SIGNAGE, BARRICADES, FLASHERS, AND FLAGGERS AS NEEDED. ALL PUBLIC STREETS SHALL BE OPEN TO TRAFFIC AT ALL TIMES. NO ROAD CLOSURES SHALL BE PERMITTED WITHOUT APPROVAL BY THE CITY.
21. ALL STRUCTURES, PUBLIC AND PRIVATE, SHALL BE ADJUSTED TO PROPOSED GRADES WHERE REQUIRED. THE REQUIREMENTS OF ALL OWNERS MUST BE COMPLIED WITH. STRUCTURES BEING RESET TO PAVED AREAS MUST MEET OWNERS REQUIREMENTS FOR TRAFFIC LOADING.
22. CONTRACTOR SHALL CORDINATE ALL WORK WITH PRIVATE UTILITY COMPANIES.
23. CONTRACTOR SHALL COORDINATE CONNECTION OF IRRIGATION SERVICE TO UTILITIES. COORDINATE THE INSTALLATION OF IRRIGATION SLEEVES NECESSARY AS TO NOT IMPACT INSTALLATION OF UTILITIES.
24. CONTRACTOR SHALL MAINTAIN AS-BUILT PLANS THROUGHOUT CONSTRUCTION AND SUBMIT THESE PLANS TO ENGINEER UPON COMPLETION OF WORK.
25. ALL JOINTS AND CONNECTIONS IN STORM SEWER SYSTEM SHALL BE GASTIGHT OR WATERTIGHT. APPROVED RESILIENT RUBBER JOINTS MUST BE USED TO MAKE WATERTIGHT CONNECTIONS TO MANHOLES, CATCHBASINS, OR OTHER STRUCTURES.

GOPHER STATE ONE CALL
WWW.GOPHERSTATEONECALL.ORG
(800) 252-1166 TOLL FREE
(651) 454-0002 LOCAL

N

1" = 20'-0"
10'-0" 0 20'-0"

CivilSite GROUP
4931 W. 35TH ST. SUITE 200
ST. LOUIS PARK, MN 55416
CivilSiteGroup.com
Matt Pavek 763-213-3944
Pat Sarver 952-250-2003

PROJECT
420 EAST HENNEPIN
420 East Hennepin, Minneapolis, MN
420 Hennepin Ave E LLC
333 Washington Avenue North, Suite 401, Minneapolis, MN

I HEREBY CERTIFY THAT THIS PLAN, SPECIFICATION, OR REPORT WAS PREPARED BY ME OR UNDER MY DIRECT SUPERVISION AND THAT I AM A DULY LICENSED PROFESSIONAL ENGINEER UNDER THE LAWS OF THE STATE OF MINNESOTA.

Matthew R. Pavek
DATE 2/23/15 LICENSE NO. 44263

ISSUE/SUBMITTAL SUMMARY

DATE	DESCRIPTION
1/30/15	MODIFIED PDR SUBMITTAL
2/23/15	CITY SUBMITTAL

REVISION SUMMARY

DATE	DESCRIPTION

UTILITY PLAN

C4.0

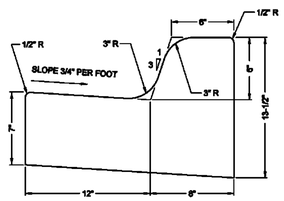

*SLOPE NOT TO EXCEED 1:20 AT CURB RAMPS

MINNEAPOLIS DEPARTMENT OF PUBLIC WORKS		B612 CURB AND GUTTER	STANDARD PLATE NO. ROAD-1000
DRAWN: JFC	DATE: 4/1/05		
APPROVED: GAS	DATE: 5/19/05		

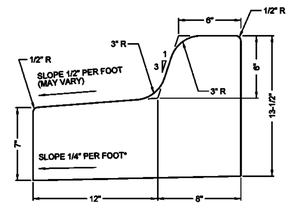

MINNEAPOLIS DEPARTMENT OF PUBLIC WORKS		B612 CURB AND GUTTER TIPOUT	STANDARD PLATE NO. ROAD-1001
DRAWN: JFC	DATE: 4/1/05		
APPROVED: GAS	DATE: 5/19/05		

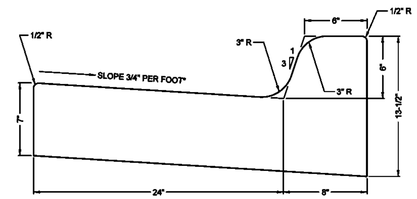

*SLOPE NOT TO EXCEED 1:20 AT CURB RAMPS

MINNEAPOLIS DEPARTMENT OF PUBLIC WORKS		B-624 CURB AND GUTTER	STANDARD PLATE NO. ROAD-1003
DRAWN: JFC	DATE: 9/10/07		
APPROVED: GAS	DATE: 5/19/05		

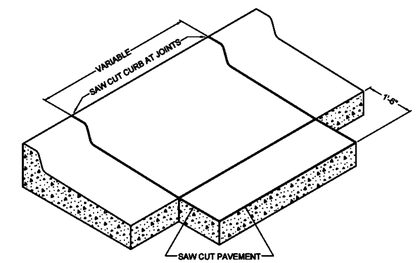

MINNEAPOLIS DEPARTMENT OF PUBLIC WORKS		SAW CUT AT CURB AND GUTTER REMOVAL	STANDARD PLATE NO. ROAD-1010
DRAWN: JFC	DATE: 9/10/07		
APPROVED: GAS	DATE: 5/19/05		

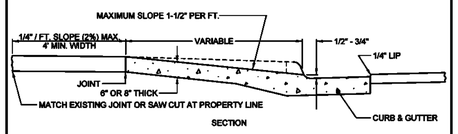

SECTION

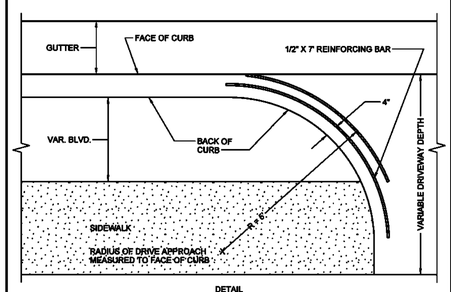

DETAIL

MINNEAPOLIS DEPARTMENT OF PUBLIC WORKS		TYPICAL DRIVEWAY CONSTRUCTION	STANDARD PLATE NO. ROAD-2001
DRAWN: JFC	DATE: 9/10/07		
APPROVED: GAS	DATE: 5/19/05		

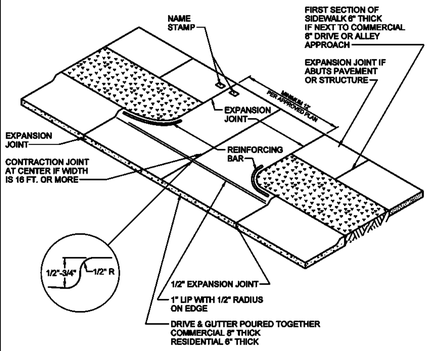

MINNEAPOLIS DEPARTMENT OF PUBLIC WORKS		TYPICAL DRIVEWAY	STANDARD PLATE NO. ROAD-2002
DRAWN: JFC	DATE: 9/10/07		
APPROVED: GAS	DATE: 5/19/05		

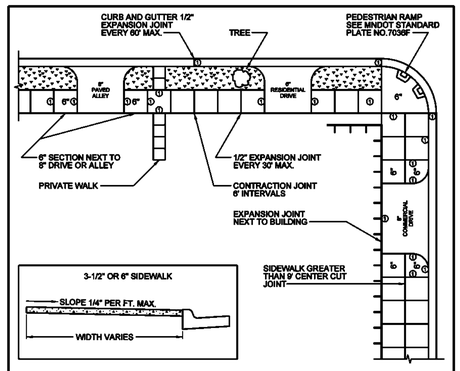

NOTE:
1. EXPANSION MATERIAL REQUIRED (SEE MNDOT SPEC BOOK, 2301.3K JOINT CONSTRUCTION).
FIRST SECTION NEXT TO COMMERCIAL DRIVEWAY OR ALLEY 6" THICK.
1/2" THICK EXPANSION JOINTS AT 30' INTERVALS (MAXIMUM).
EXPANSION TO BE USED WHEN SIDEWALK ABUTS BUILDING.
CONTRACTION JOINT TO BE CENTERED ON SIDEWALK WIDER THAN 9'.
CONTRACTION JOINT TO BE PLACED EVERY 8' OR LESS.

MINNEAPOLIS DEPARTMENT OF PUBLIC WORKS		TYPICAL SIDEWALK AND DRIVEWAY CONSTRUCTION	STANDARD PLATE NO. ROAD-2003
DRAWN: JFC	DATE: 9/10/07		
APPROVED: GAS	DATE: 5/19/05		

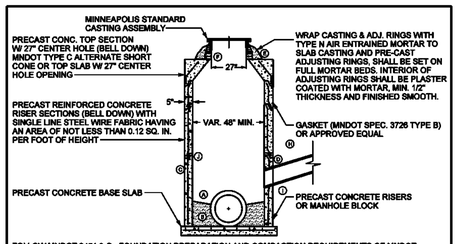

FOLLOW MNDOT 2451.3-C - FOUNDATION PREPARATION AND COMPACTION REQUIREMENTS OF MNDOT 2105.3 F1 - SPECIFIED DENSITY METHOD (100% COMPACTION REQUIREMENTS OF STANDARD PROCTOR)

MNDOT DESIGN F, MODIFIED
CONTINUOUS INSIDE DIAMETER
USE MINNEAPOLIS SHORT CONE SECTION (MNDOT TYPE C ALTERNATE) OR TOP SLAB ONLY

(A) BOTTOM TO BE SHAPED 2/3 OF PIPE DIAMETER WITH POURED CONCRETE TO PROVIDE EFFICIENT FLOW.
(B) WHEN THE INVERT OF THE INLET PIPE IS BELOW THE SPRING LINE OF THE MAIN, THEN PROVIDE CONCRETE "POWER FLOWS" FOR POSITIVE DOWN STREAM FLOW THROUGH MANHOLE.
(C) PRE-CAST CONCRETE MANHOLE SECTIONS.
(D) FILL AROUND INLET PIPE AND LIFTING HOLES WITH CEMENT MORTAR. TYPE N AIR ENTRAINED, FINISH SMOOTH AS NECESSARY. ALL PIPES CONNECTING TO MHS SHALL BE TRIMMED FLUSH TO THE INTERIOR WALL OF THE MH STRUCTURE.
(E) MANHOLE CASTING SHALL BE SET ON A FULL MORTAR BED, TYPE N AIR ENTRAINED
(F) THE NUMBER OF CONCRETE ADJUSTING RINGS SHALL BE LIMITED TO PROVIDE A MAXIMUM THICKNESS OF 8" INCLUDING MORTAR, TYPE N AIR ENTRAINED WITH A MINIMUM OF 1 - 2" ADJUSTING RING.
ALL ADJUSTING RINGS TO BE NEATLY SEALED WITH CONCRETE GROUT, TYPE N AIR ENTRAINED, ON THE INTERIOR OF THE STRUCTURE.
MINIMUM OF 2" OF ADJUSTING RINGS & MORTAR TYPE N AIR ENTRAINED REQUIRED.
ALL WOOD AND NON-CONCRETE ADJUSTING DEVICES SHALL BE REMOVED.
(G) CONCRETE MANHOLE BLOCK MAY BE USED WITH THE APPROVAL OF CITY ENGINEER.
INTERIOR & EXTERIOR OF BLOCK WORK SHALL BE MORTAR PLASTERED, TYPE N AIR ENTRAINED, TO A SMOOTH FINISH, MIN. 1/2" THICKNESS.
(H) SUITABLE BACKFILL UNIFORMLY DISTRIBUTED IN 8" OR LESS LAYERS AND COMPACTED BEFORE SUCCESSIVE LAYERS ARE ADDED. MNDOT 2451.3 D - BACKFILLING EXCAVATIONS, COMPACTION IN ACCORDANCE WITH MNDOT 2105.3 F1 - SPECIFIED DENSITY METHOD.
(J) FILL ANNULAR SPACE ON BELL END OF 1ST RISER SECTION WITH BRICK AND MORTAR, TYPE N AIR ENTRAINED, IF REQUIRED.
(I) WATER STOP REQUIRED ON PVC, DIP, VCP, HDPE, HOBAS, PPP.

MINNEAPOLIS SHORT CONE SECTION SHALL BE USED UNLESS OTHERWISE SPECIFIED IN THE PLANS AND PLASTER COATED WITH TYPE N AIR ENTRAINED MORTAR (TO A SMOOTH FINISH).
ALL PRE-CAST MH RISER SECTIONS SHALL BE CONFIGURED TO PLACE THE BELL END DOWN.

MINNEAPOLIS CUSTOM
MNDOT SPEC. REF. 2506
MODIFIED MNDOT 4000J, 4005L
NOT TO SCALE

MINNEAPOLIS DEPARTMENT OF PUBLIC WORKS		TYPICAL MANHOLE CONSTRUCTION	STANDARD PLATE NO. SEWR-1000-R1
DRAWN: DCD	DATE: 12/09		
APPROVED: HRS	DATE: 12/09		

CivilSite GROUP
4931 W. 35TH ST. SUITE 200
ST. LOUIS PARK, MN 55416
CivilSiteGroup.com
Matt Pavek 763-213-3944
Pat Sarver 952-250-2003

PROJECT

420 EAST HENNEPIN

420 East Hennepin, Minneapolis, MN

420 Hennepin Ave E LLC

333 Washington Avenue North, Suite 401, Minneapolis, MN

I HEREBY CERTIFY THAT THIS PLAN, SPECIFICATION, OR REPORT WAS PREPARED BY ME OR UNDER MY DIRECT SUPERVISION AND THAT I AM A DULY LICENSED PROFESSIONAL ENGINEER UNDER THE LAWS OF THE STATE OF MINNESOTA.

Matthew R. Pavek

DATE 2/23/15 LICENSE NO. 44263

ISSUE/SUBMITTAL SUMMARY

DATE	DESCRIPTION
1/30/15	MODIFIED PDR SUBMITTAL
2/23/15	CITY SUBMITTAL

REVISION SUMMARY

DATE	DESCRIPTION

CIVIL DETAILS

C5.0

STRUCTURE	PRECAST CONCRETE BASE				
SIZE (in.)	OUTSIDE DIA. (in.)	"T" (in.)	MIN. REINFORCEMENT ① (in.) BAR NUMBER	SPACING (in.)	WT. (lbs.)
30	44	6	#4	12	1580
48	66	6	#4	12	1580
60	78	8	#4	12	3320
72	92	8	#4	12	4820
84	105	8	#4	8	6130
96	120	8	#4	8	7850
108	132	10	#4	8	10690
120	148	12	#4	8	17440

ALL REBARS ARE IN ENGLISH DESIGNATIONS

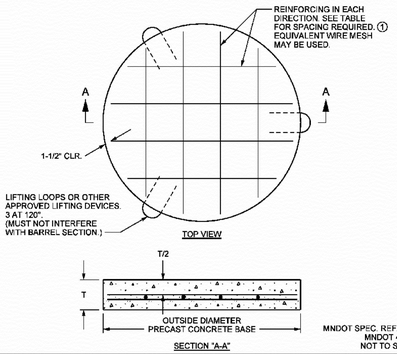

MNDOT SPEC. REF. 2506
MNDOT 4011E
NOT TO SCALE

MINNEAPOLIS DEPARTMENT OF PUBLIC WORKES | DRAWN: CKD | DATE: 2/03 | APPROVED: HRS | DATE: 12/06 | MANHOLE BASE SLAB | STANDARD PLATE NO. SEWR-1003

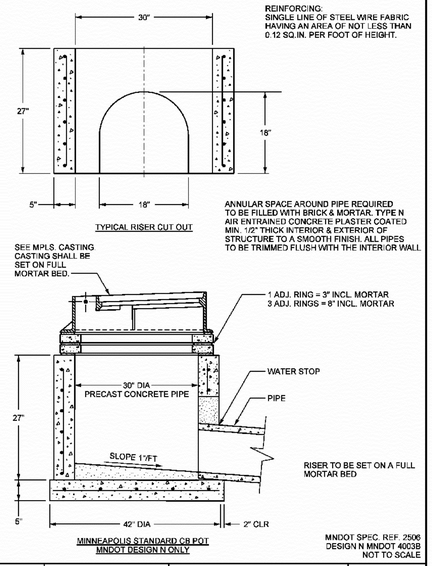

REINFORCING:
SINGLE LINE OF STEEL WIRE FABRIC HAVING AN AREA OF NOT LESS THAN 0.12 SQ.IN. PER FOOT OF HEIGHT.

ANNULAR SPACE AROUND PIPE REQUIRED TO BE FILLED WITH BRICK & MORTAR. TYPE N AIR ENTRAINED CONCRETE PLASTER COATED MIN. 1/2" THICK INTERIOR & EXTERIOR OF STRUCTURE TO A SMOOTH FINISH. ALL PIPES TO BE TRIMMED FLUSH WITH THE INTERIOR WALL.

RISER TO BE SET ON A FULL MORTAR BED

MNDOT SPEC. REF. 2506
DESIGN N MNDOT 4003B
NOT TO SCALE

MINNEAPOLIS DEPARTMENT OF PUBLIC WORKES | DRAWN: DCD | DATE: 12/09 | APPROVED: HRS | DATE: 12/09 | PRECAST CATCH BASIN POT | STANDARD PLATE NO. SEWR-1008-R1

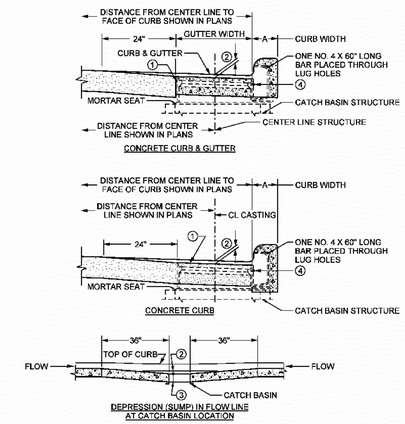

NOTES:
① CATCH BASIN CASTING.
② ON ALL APPLICATIONS USE 1-1/4" SUMP. SUMP SHALL BE MEASURED AT CENTER OF CASTING.
③ SAME THICKNESS AS ADJACENT PAVEMENT OR GUTTER.
④ CURB INLET CASTING SHALL BE FASTENED TEMPORARILY TO FRAME. CASTING WITH 2 CAP SCREWS. DURING CURB CONSTRUCTION. CAP SCREWS MUST BE REMOVED AFTER CURB HAS HARDENED.

COMPENSATE FOR TILT BY VARYING THE DEPTH OF MORTAR SEAT.
ALL REINFORCEMENT REQUIRED IS INCIDENTAL, WITH NO DIRECT PAYMENT.
ALL REBARS ARE IN ENGLISH DESIGNATIONS.
ALL REBARS ARE GRADE 60

MNDOT SPEC. REF. 2506
MNDOT 7111J
NOT TO SCALE

MINNEAPOLIS DEPARTMENT OF PUBLIC WORKES | DRAWN: DCD | DATE: 12/09 | APPROVED: HRS | DATE: 12/06 | CATCH BASIN INSTALLATION | STANDARD PLATE NO. SEWR-1009

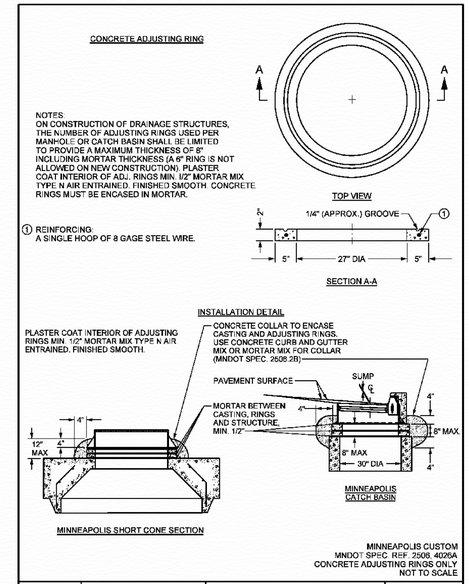

MINNEAPOLIS CUSTOM
MNDOT SPEC. REF. 2506, 4026A
CONCRETE ADJUSTING RINGS ONLY
NOT TO SCALE

MINNEAPOLIS DEPARTMENT OF PUBLIC WORKES | DRAWN: DCD | DATE: 12/09 | APPROVED: HRS | DATE: 12/09 | CONCRETE ADJUSTING RINGS | STANDARD PLATE NO. SEWR-1011-R1

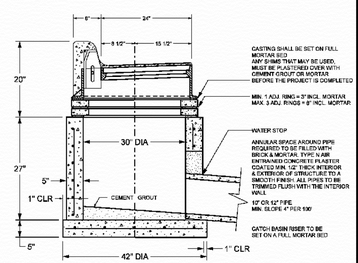

TYPICAL CATCH BASIN CONSTRUCTION, MINNEAPOLIS STANDARD

SEWR PLATE REFERENCES:
SEWR-1003
SEWR-1008-R1
SEWR-1009
SEWR-1010
SEWR-1011-R1
SEWR-2006
SEWR-2007
SEWR-2008
SEWR-3000
SEWR-3001

MNDOT SPEC. REF. 2506
DESIGN N MNDOT 4003B
NOT TO SCALE

MINNEAPOLIS DEPARTMENT OF PUBLIC WORKES | DRAWN: DCD | DATE: 12/12 | APPROVED: KMM | DATE: 12/12 | STANDARD CATCH BASIN CONSTRUCTION | STANDARD PLATE NO. SEWR-1017

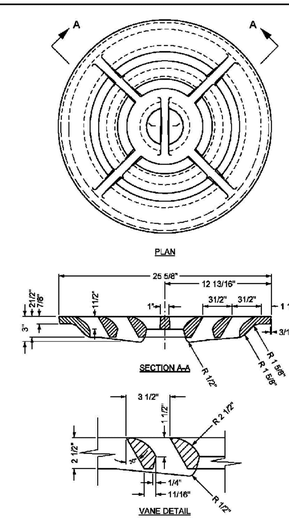

NOTES:
MINNEAPOLIS ALLEY INLET GRATE
MATERIAL: GRAY IRON ASTM A-48

MINNEAPOLIS CUSTOM
MNDOT SPEC. REF. 2506
MODIFIED MNDOT 4154B
NOT TO SCALE

MINNEAPOLIS DEPARTMENT OF PUBLIC WORKES | DRAWN: ZTT | DATE: 12/02 | APPROVED: HRS | DATE: 12/06 | CIRCULAR VANE GRATE | STANDARD PLATE NO. SEWR-2003

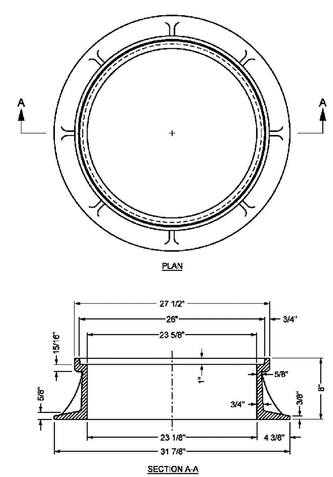

NOTES:
WEIGHT = 194 LBS.
MATERIAL: GRAY IRON ASTM A-48

MINNEAPOLIS CUSTOM
MNDOT SPEC. REF. 2506
MODIFIED MNDOT 4101D
NOT TO SCALE

MINNEAPOLIS DEPARTMENT OF PUBLIC WORKES | DRAWN: DCD | DATE: 2/07 | APPROVED: HRS | DATE: 2/07 | STANDARD MANHOLE CASTING | STANDARD PLATE NO. SEWR-2004

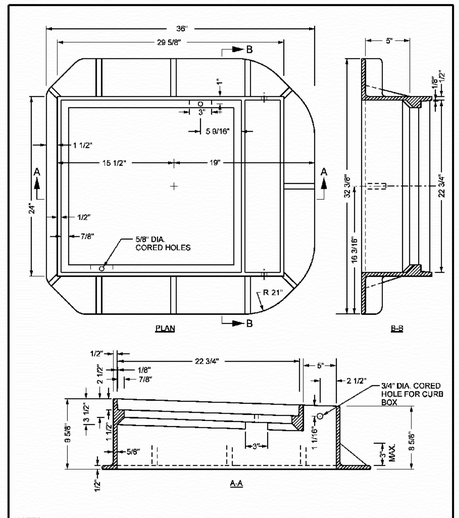

NOTES:
FOR USE WITH 30" DIA. REINFORCED CONCRETE CATCH BASIN POT. MAY ALSO BE USED ON A MANHOLE STRUCTURE WHEN PLACED TO CAPTURE GUTTER FLOWS.
MNDOT FRAME CASTING 806, USE GRATE 816, CURB BOX 824.
APPROXIMATE WEIGHT = 302 LBS.
MATERIAL: GRAY IRON ASTM A-48

MNDOT SPEC. REF. 2506
MNDOT 4125D
NOT TO SCALE

MINNEAPOLIS DEPARTMENT OF PUBLIC WORKES | DRAWN: DCD | DATE: 2/03 | APPROVED: HRS | DATE: 12/06 | CATCH BASIN CASTING | STANDARD PLATE NO. SEWR-2006

CivilSite GROUP
4931 W. 35TH ST, SUITE 200
ST. LOUIS PARK, MN 55416
CivilSiteGroup.com
Matt Pavek 763-213-3944
Pat Sarver 952-250-2003

PROJECT
420 EAST HENNEPIN
420 East Hennepin, Minneapolis, MN
420 Hennepin Ave E LLC
333 Washington Avenue North, Suite 401, Minneapolis, MN

I HEREBY CERTIFY THAT THIS PLAN, SPECIFICATION, OR REPORT WAS PREPARED BY ME OR UNDER MY DIRECT SUPERVISION AND THAT I AM A DULY LICENSED PROFESSIONAL ENGINEER UNDER THE LAWS OF THE STATE OF MINNESOTA.

Matthew R. Pavek
DATE 2/23/15 LICENSE NO. 44263

ISSUE/SUBMITTAL SUMMARY

DATE	DESCRIPTION
1/30/15	MODIFIED PDR SUBMITTAL
2/23/15	CITY SUBMITTAL

REVISION SUMMARY

DATE	DESCRIPTION

CIVIL DETAILS

C5.1

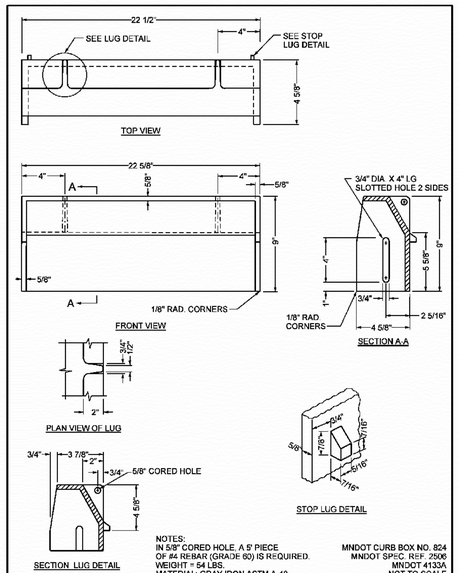

NOTES:
IN 5/8" CORED HOLE, A 5' PIECE OF #4 REBAR (GRADE 60) IS REQUIRED.
WEIGHT = 54 LBS.
MATERIAL: GRAY IRON ASTM A-48

MNDOT CURB BOX NO. 824
MNDOT SPEC. REF. 2506
MNDOT 4133A
NOT TO SCALE

MINNEAPOLIS DEPARTMENT OF PUBLIC WORKS		CURB BOX CASTING FOR CATCH BASIN	STANDARD PLATE NO. SEWR-2007
DRAWN: DCD	DATE: 2/03		
APPROVED: HRS	DATE: 12/06		

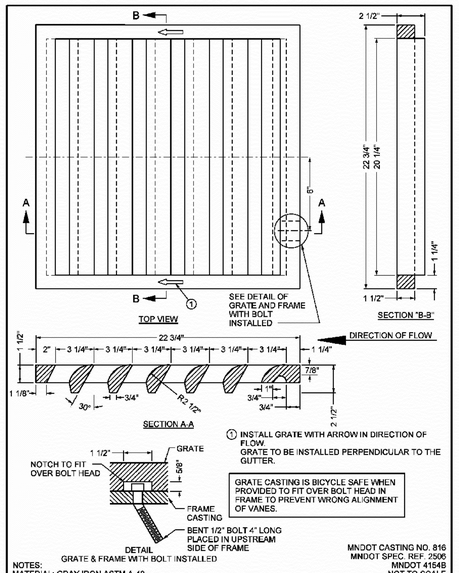

① INSTALL GRATE WITH ARROW IN DIRECTION OF FLOW.
GRATE TO BE INSTALLED PERPENDICULAR TO THE GUTTER.

GRATE CASTING IS BICYCLE SAFE WHEN PROVIDED TO FIT OVER BOLT HEAD IN FRAME TO PREVENT WRONG ALIGNMENT OF VANES.

NOTES:
MATERIAL: GRAY IRON ASTM A-48

MNDOT CASTING NO. 816
MNDOT SPEC. REF. 2506
MNDOT 4154B
NOT TO SCALE

MINNEAPOLIS DEPARTMENT OF PUBLIC WORKS		CATCH BASIN GRATE TYPE "V"	STANDARD PLATE NO. SEWR-2008
DRAWN: DCD	DATE: 1/03		
APPROVED: HRS	DATE: 12/06		

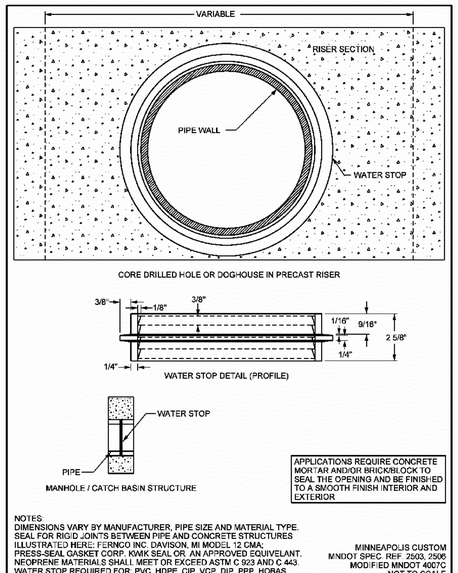

APPLICATIONS REQUIRE CONCRETE MORTAR AND/OR BRICK/BLOCK TO SEAL THE OPENING AND BE FINISHED TO A SMOOTH FINISH INTERIOR AND EXTERIOR

NOTES:
DIMENSIONS VARY BY MANUFACTURER, PIPE SIZE AND MATERIAL TYPE.
SEAL FOR RIGID JOINTS BETWEEN PIPE AND CONCRETE STRUCTURES ILLUSTRATED HERE: FERNCO INC. DAVISON, MI MODEL 12 CMA; PRESS-SEAL GASKET CORP. KWIK SEAL OR. AN APPROVED EQUIVELANT.
NEOPRENE MATERIALS SHALL MEET OR EXCEED ASTM C 923 AND C 443.
WATER STOP REQUIRED FOR: PVC, HDPE, CIP, VCP, DIP, PPP, HOBAS.

MINNEAPOLIS CUSTOM
MNDOT SPEC. REF. 2503, 2506
MODIFIED MNDOT 4007C
NOT TO SCALE

MINNEAPOLIS DEPARTMENT OF PUBLIC WORKS		WATER STOP DETAIL	STANDARD PLATE NO. SEWR-3000
DRAWN: DCD	DATE: 2/03		
APPROVED: HRS	DATE: 12/06		

CORED OPENINGS SHALL BE BEVELLED TO ALLOW FOR MIS-ALIGNMENT.
FLEXIBLE SLEEVE SHALL BE NEOPRENE MATERIAL MEETING ASTM C-443.
VOIDS BETWEEN GASKET AND STRUCTURE SHALL BE FILLED USING TYPE N MORTAR AND FINISHED SMOOTH.

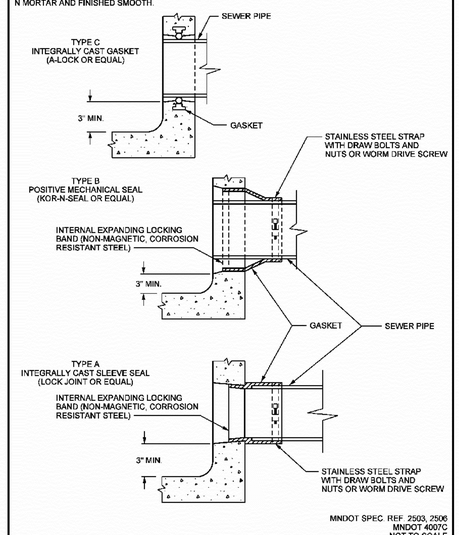

MNDOT SPEC. REF. 2503, 2506
MNDOT 4007C
NOT TO SCALE

MINNEAPOLIS DEPARTMENT OF PUBLIC WORKS		WATERTIGHT PIPE CONNECTION	STANDARD PLATE NO. SEWR-3001
DRAWN: DCD	DATE: 3/03		
APPROVED: HRS	DATE: 12/06		

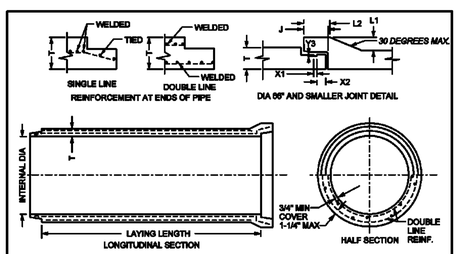

SEE PLATE SEWR-4000 FOR SHEAR REINFORCEMENT DETAILS — MODIFIED MNDOT 3000L "C" WALL ONLY

INTERNAL DIA. OF PIPE (IN.)	CROSS SECTION AREA	WALL THICKNESS (IN.) T	WEIGHT (LB. PER LIN. FT.)	MIN L2 (IN.)	L1 C WALL (IN.)	X1 (IN.)	X2 (IN.)	Y3 (IN.)
12	0.79	2 3/4	140	5	1 3/8	1	7/8	.313
15	1.23	3	180	4 3/4	1 1/2	1	7/8	.313
18	1.77	3 1/4	230	5	1 3/4	1	7/8	.313
21	2.40	3 1/2	280	5 1/4	1 7/8	1	7/8	.313
24	3.14	3 3/4	340	5 1/2	2	1	7/8	.313
27	3.98	4	410	5 1/2	2	1	7/8	.313
30	4.91	4 1/4	480	5 1/2	2	1	7/8	.313
33	5.94	4 1/2	610	5 3/4	2 1/8	1	7/8	.313
36	7.07	4 3/4	630	6	2 3/8	1	7/8	.313
42	9.62	5 1/4	810	6 3/4	3	1 3/16	1	.375
48	12.57	5 3/4	1010	7 1/4	3 3/8	1 3/16	1	.375
54	15.90	6 1/4	1230	7 1/2	2 7/8	1 3/16	1	.375
60	19.63	6 3/4	1470	7 1/2	2 3/8	1 3/16	1	.375
66	23.76	7 1/4	1740	7 1/2	2	1 3/16	1	.375

MNDOT SPEC. REF. 2503
NOT TO SCALE

MINNEAPOLIS DEPARTMENT OF PUBLIC WORKS		RC PIPE 66" AND UNDER	STANDARD PLATE NO. SEWR-4001
DRAWN: DCD	DATE: 12/02		
APPROVED: HRS	DATE: 12/06		

CIRCULAR CONCRETE PIPE
HEIGHT OF BACKFILL IN FEET FOR CLASS C BEDDING
MEASURED AT TOP OF PIPE IN FEET, 120 PCF SOIL DENSITY

PIPE CLASS	CLASS II		CLASS III		CLASS IV		CLASS V	
PIPE DIA. (in.)	N	W	N	W	N	W	N	W
12	6	8	9	9	13	13	21	19
15	6	8	9	9	13	13	22	19
18	7	7	9	9	14	13	34	20
21	7	7	9	9	14	14	34	20
24	7	7	9	9	14	14	34	20
27	7	7	9	9	16	14	34	20
30	7	7	10	9	16	14	34	20
33	7	7	10	9	16	14	34	20
36	7	7	10	9	17	14	34	21
42	7	7	10	9	17	14	34	21
48	8	8	11	10	18	14	34	21
54	8	8	11	10	18	14	34	21
60	8	8	11	10	18	14	34	21
66	8	8	11	10	18	14	34	21
72	8	8	12	11	19	14	34	21
78	9	8	12	11	20	15	34	21
84	9	9	12	11	20	15	34	21
90	9	9	12	11	20	15	34	22
96	9	9	13	11	20	15	34	22
102	9	9	13	11	20	16	34	22
108	9	9	13	12	20	16	34	22

N = NARROW TRENCH: MINIMUM WIDTH
W = WIDE TRENCH: TRANSITION WIDTH
PIPE DIA. (in.) = INSIDE DIAMETER IN CHART

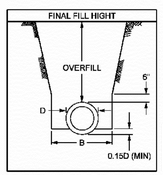

CLASS C (ORDINARY BEDDING)
CLASS C BEDDING CONSISTS OF CAREFULLY SHAPING THE FOUNDATION SOIL TO FIT THE LOWER EXTERIOR OF THE PIPE TO A DEPTH OF AT LEAST 15% OF THE OUTSIDE DIAMETER FOR CIRCULAR PIPES, AND AT LEAST EQUAL TO 1/2 OF THE HEIGHT OF ARCH PIPE. ADDITIONAL CONSIDERATION FOR BELL END PIPE IS USED. THE BEDDING MUST BE EXCAVATED TO ACCEPT THE BELL END SO THAT THE PIPE IS SUPPORTED ALONG ITS FULL LENGTH AND NOT JUST AT THE BELL.

PIPE DIA. (in.)	B
36 OR LESS	D + 24"
42 TO 54	1.5 x D
60 OR OVER	D + 36

MINNEAPOLIS DESIGN REFERENCE
MNDOT DRINAGE MANUAL
SECTION 2.5; AUGUST 30, 2000
FIG 2.3 CLASSES OF BEDDING FOR TRENCH CONDITIONS
NOT TO SCALE

MINNEAPOLIS DEPARTMENT OF PUBLIC WORKS		CLASS "C" BEDDING FOR TRENCH CONDITION	STANDARD PLATE NO. SEWR-6002
DRAWN: DCD	DATE: 12/02		
APPROVED: HRS	DATE: 1/07		

CivilSite GROUP
4931 W. 35TH ST, SUITE 200
ST. LOUIS PARK, MN 55416
CivilSiteGroup.com
Matt Pavek 763-213-3944
Pat Sarver 952-250-2003

PROJECT
420 EAST HENNEPIN
420 East Hennepin, Minneapolis, MN
420 Hennepin Ave E LLC
333 Washington Avenue North, Suite 401, Minneapolis, MN

I HEREBY CERTIFY THAT THIS PLAN, SPECIFICATION, OR REPORT WAS PREPARED BY ME OR UNDER MY DIRECT SUPERVISION AND THAT I AM A DULY LICENSED PROFESSIONAL ENGINEER UNDER THE LAWS OF THE STATE OF MINNESOTA.

Matthew R. Pavek
DATE 2/23/15 LICENSE NO. 44263

ISSUE/SUBMITTAL SUMMARY

DATE	DESCRIPTION
1/30/15	MODIFIED PDR SUBMITTAL
2/23/15	CITY SUBMITTAL

REVISION SUMMARY

DATE	DESCRIPTION

CIVIL DETAILS

C5.2

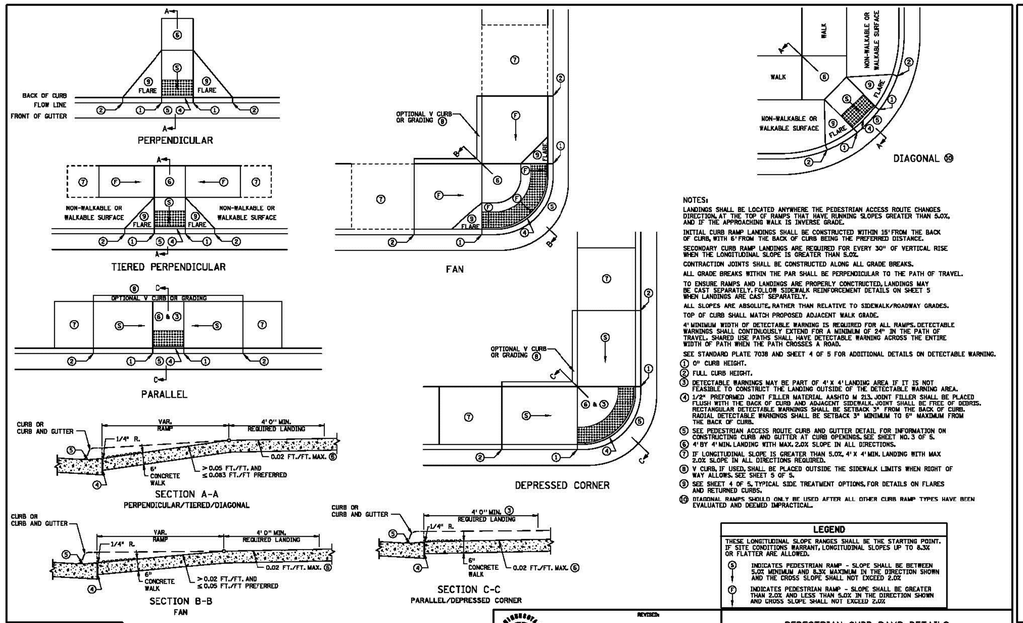

NOTES:

LANDINGS SHALL BE LOCATED ANYWHERE THE PEDESTRIAN ACCESS ROUTE CHANGES DIRECTION, AT THE TOP OF RAMPS THAT HAVE RUNNING SLOPES GREATER THAN 5.0%, AND 3' THE APPROACHING WALK IS INVERSE GRADE.

INITIAL CURB RAMP LANDINGS SHALL BE CONSTRUCTED WITHIN 15' FROM THE BACK OF CURB, WITH 6' FROM THE BACK OF CURB BEING THE PREFERRED DISTANCE.

SECONDARY CURB RAMP LANDINGS ARE REQUIRED FOR EVERY 30" OF VERTICAL RISE WHEN THE LONGITUDINAL SLOPE IS GREATER THAN 5.0%.

CONTRACTION JOINTS SHALL BE CONSTRUCTED ALONG ALL GRADE BREAKS.

ALL GRADE BREAKS WITHIN THE PAR SHALL BE PERPENDICULAR TO THE PATH OF TRAVEL.

TO ENSURE RAMPS AND LANDINGS ARE PROPERLY CONSTRUCTED, LANDINGS MAY BE CAST SEPARATELY, FOLLOW SIDEWALK REINFORCEMENT DETAILS ON SHEET 5 WHEN LANDINGS ARE CAST SEPARATELY.

ALL SLOPES ARE ABSOLUTE, RATHER THAN RELATIVE TO SIDEWALK/ROADWAY GRADES.

TOP OF CURB SHALL MATCH PROPOSED ADJACENT WALK GRADE.

4' MINIMUM WIDTH OF DETECTABLE WARNING IS REQUIRED FOR ALL RAMPS. DETECTABLE WARNINGS SHALL CONTINUOUSLY EXTEND FOR A MINIMUM OF 24" IN THE PATH OF TRAVEL. SHARED USE PATHS SHALL HAVE DETECTABLE WARNING ACROSS THE ENTIRE WIDTH OF PATH WHEN THE PATH CROSSES A ROAD.

SEE STANDARD PLATE 7038 AND SHEET 4 OF 5 FOR ADDITIONAL DETAILS ON DETECTABLE WARNING.

1. 0" CURB HEIGHT.
2. FULL CURB HEIGHT.
3. DETECTABLE WARNINGS MAY BE PART OF 4'X 4' LANDING AREA IF IT IS NOT FEASIBLE TO CONSTRUCT THE LANDING OUTSIDE OF THE DETECTABLE WARNING AREA.
4. 1/2" PREFORMED JOINT FILLER MATERIAL AASHTO M 213. JOINT FILLER SHALL BE PLACED FLUSH WITH THE BACK OF CURB AND ADJACENT SIDEWALK. JOINT SHALL BE FREE OF DEBRIS. RECTANGULAR DETECTABLE WARNINGS SHALL BE SETBACK 3" FROM THE BACK OF CURB. RADIAL DETECTABLE WARNINGS SHALL BE SETBACK 3" MIN. TO 6" MAX. FROM THE BACK OF CURB.
5. SEE PEDESTRIAN ACCESS ROUTE CURB AND GUTTER DETAIL FOR INFORMATION ON CONSTRUCTING CURB AND GUTTER AT CURB OPENINGS. SEE SHEET NO. 3 OF 5.
6. 4' BY 4' MIN. LANDING WITH MAX. 2.0% SLOPE IN ALL DIRECTIONS.
7. 1' MIN. LANDING WITH MAX. 2.0% SLOPE IN ALL DIRECTIONS.
8. V CURB, IF USED, SHALL BE PLACED OUTSIDE THE SIDEWALK LIMITS WHEN RIGHT OF WAY ALLOWS. SEE SHEET 5 OF 5.
9. SEE SHEET 4 OF 5, TYPICAL SIDE TREATMENT OPTIONS, FOR DETAILS ON FLARES AND RETURNED CURBS.
10. DIAGONAL RAMPS SHOULD ONLY BE USED AFTER ALL OTHER CURB RAMP TYPES HAVE BEEN EVALUATED AND DEEMED IMPRACTICAL.

LEGEND

THESE LONGITUDINAL SLOPE RANGES SHALL BE THE STARTING POINT. IF SITE CONDITIONS WARRANT, LONGITUDINAL SLOPES UP TO 8.3% OR FLATTER ARE ALLOWED.

- (5) INDICATES PEDESTRIAN RAMP - SLOPE SHALL BE BETWEEN 5.0% MINIMUM AND 8.3% MAXIMUM IN THE DIRECTION SHOWN AND THE CROSS SLOPE SHALL NOT EXCEED 2.0%
- (7) INDICATES PEDESTRIAN RAMP - SLOPE SHALL BE GREATER THAN 2.0% AND LESS THAN 5.0% IN THE DIRECTION SHOWN AND CROSS SLOPE SHALL NOT EXCEED 2.0%

REVISION№ APPROVED 2-5-2014 STRUCTURE ENGINEER

REVISED: STATE DESIGN ENGINEER Christopher Ry APPROVED 8-6-2014

PEDESTRIAN CURB RAMP DETAILS

STANDARD PLAN 5-297.250 | 1 OF 5

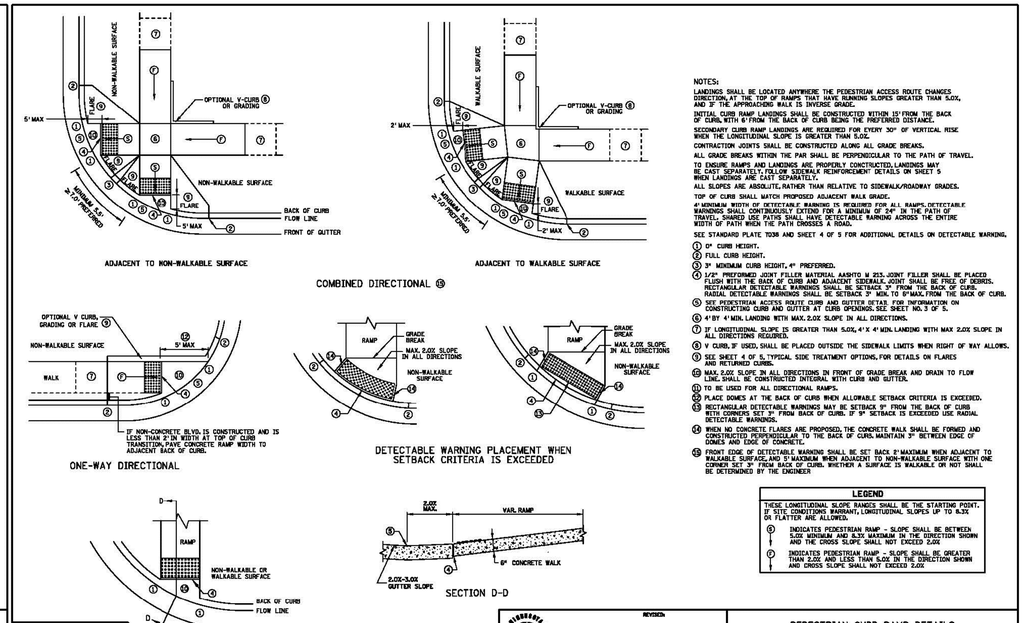

NOTES:

LANDINGS SHALL BE LOCATED ANYWHERE THE PEDESTRIAN ACCESS ROUTE CHANGES DIRECTION, AT THE TOP OF RAMPS THAT HAVE RUNNING SLOPES GREATER THAN 5.0%, AND 3' THE APPROACHING WALK IS INVERSE GRADE.

INITIAL CURB RAMP LANDINGS SHALL BE CONSTRUCTED WITHIN 15' FROM THE BACK OF CURB, WITH 6' FROM THE BACK OF CURB BEING THE PREFERRED DISTANCE.

SECONDARY CURB RAMP LANDINGS ARE REQUIRED FOR EVERY 30" OF VERTICAL RISE WHEN THE LONGITUDINAL SLOPE IS GREATER THAN 5.0%.

CONTRACTION JOINTS SHALL BE CONSTRUCTED ALONG ALL GRADE BREAKS.

ALL GRADE BREAKS WITHIN THE PAR SHALL BE PERPENDICULAR TO THE PATH OF TRAVEL.

TO ENSURE RAMPS AND LANDINGS ARE PROPERLY CONSTRUCTED, LANDINGS MAY BE CAST SEPARATELY, FOLLOW SIDEWALK REINFORCEMENT DETAILS ON SHEET 5 WHEN LANDINGS ARE CAST SEPARATELY.

ALL SLOPES ARE ABSOLUTE, RATHER THAN RELATIVE TO SIDEWALK/ROADWAY GRADES.

TOP OF CURB SHALL MATCH PROPOSED ADJACENT WALK GRADE.

4' MINIMUM WIDTH OF DETECTABLE WARNING IS REQUIRED FOR ALL RAMPS. DETECTABLE WARNINGS SHALL CONTINUOUSLY EXTEND FOR A MINIMUM OF 24" IN THE PATH OF TRAVEL. SHARED USE PATHS SHALL HAVE DETECTABLE WARNING ACROSS THE ENTIRE WIDTH OF PATH WHEN THE PATH CROSSES A ROAD.

SEE STANDARD PLATE 7038 AND SHEET 4 OF 5 FOR ADDITIONAL DETAILS ON DETECTABLE WARNING.

1. 0" CURB HEIGHT.
2. FULL CURB HEIGHT.
3. 3" MINIMUM CURB HEIGHT, 4" PREFERRED.
4. 1/2" PREFORMED JOINT FILLER MATERIAL AASHTO M 213. JOINT FILLER SHALL BE PLACED FLUSH WITH THE BACK OF CURB AND ADJACENT SIDEWALK. JOINT SHALL BE FREE OF DEBRIS. RECTANGULAR DETECTABLE WARNINGS SHALL BE SETBACK 3" FROM THE BACK OF CURB. RADIAL DETECTABLE WARNINGS SHALL BE SETBACK 3" MIN. TO 6" MAX. FROM THE BACK OF CURB.
5. SEE PEDESTRIAN ACCESS ROUTE CURB AND GUTTER DETAIL FOR INFORMATION ON CONSTRUCTING CURB AND GUTTER AT CURB OPENINGS. SEE SHEET NO. 3 OF 5.
6. 4' BY 4' MIN. LANDING WITH MAX. 2.0% SLOPE IN ALL DIRECTIONS.
7. 1' MIN. LANDING WITH MAX. 2.0% SLOPE IN ALL DIRECTIONS REQUIRED.
8. V CURB, IF USED, SHALL BE PLACED OUTSIDE THE SIDEWALK LIMITS WHEN RIGHT OF WAY ALLOWS.
9. SEE SHEET 4 OF 5, TYPICAL SIDE TREATMENT OPTIONS, FOR DETAILS ON FLARES AND RETURNED CURBS.
10. MAX. 2.0% SLOPE IN ALL DIRECTIONS IN FRONT OF GRADE BREAK AND DRAIN TO FLOW LINE. SHALL BE CONSTRUCTED INTEGRAL WITH CURB AND GUTTER.
11. TO BE USED FOR ALL DIRECTIONAL RAMPS.
12. PLACE DOMES AT THE BACK OF CURB WHEN ALLOWABLE. SETBACK CRITERIA IS EXCEEDED.
13. RECTANGULAR DETECTABLE WARNINGS MAY BE SETBACK 9" FROM THE BACK OF CURB WITH CORNERS SET 3" FROM BACK OF CURB. IF 9" SETBACK IS EXCEEDED USE RADIAL DETECTABLE WARNINGS.
14. WHEN NO CONCRETE FLARES ARE PROPOSED, THE CONCRETE WALK SHALL BE FORMED AND CONSTRUCTED PERPENDICULAR TO THE BACK OF CURB. MAINTAIN 3" BETWEEN EDGE OF DOMES AND EDGE OF CONCRETE.
15. FRONT EDGE OF DETECTABLE WARNING SHALL BE SET BACK 8" MAXIMUM WHEN ADJACENT TO WALKABLE SURFACE, AND 5" MAXIMUM WHEN ADJACENT TO NON-WALKABLE SURFACE WITH ONE SEPARATE SET 3" FROM BACK OF CURB. WHETHER A SURFACE IS WALKABLE OR NOT SHALL BE DETERMINED BY THE ENGINEER

LEGEND

THESE LONGITUDINAL SLOPE RANGES SHALL BE THE STARTING POINT. IF SITE CONDITIONS WARRANT, LONGITUDINAL SLOPES UP TO 8.3% OR FLATTER ARE ALLOWED.

- (5) INDICATES PEDESTRIAN RAMP - SLOPE SHALL BE BETWEEN 5.0% MINIMUM AND 8.3% MAXIMUM IN THE DIRECTION SHOWN AND THE CROSS SLOPE SHALL NOT EXCEED 2.0%
- (7) INDICATES PEDESTRIAN RAMP - SLOPE SHALL BE GREATER THAN 2.0% AND LESS THAN 5.0% IN THE DIRECTION SHOWN AND CROSS SLOPE SHALL NOT EXCEED 2.0%

REVISION№ APPROVED 2-5-2014 STRUCTURE ENGINEER

REVISED: STATE DESIGN ENGINEER Christopher Ry APPROVED 8-6-2014

PEDESTRIAN CURB RAMP DETAILS

STANDARD PLAN 5-297.250 | 2 OF 5

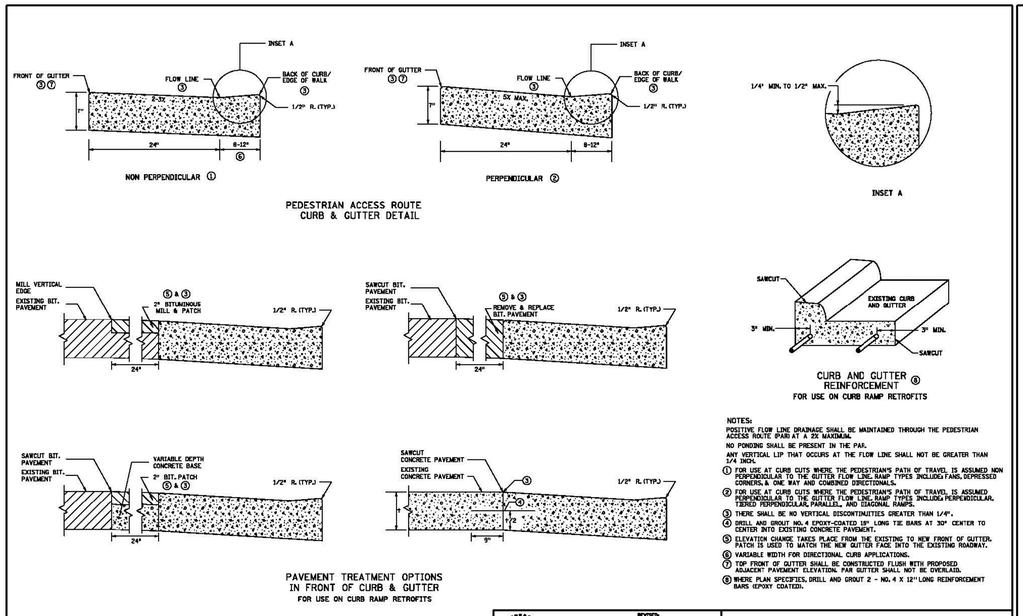

NOTES:

POSITIVE FLOW LINE DRAINAGE SHALL BE MAINTAINED THROUGH THE PEDESTRIAN ACCESS ROUTE (PAR) AT A 2% MAXIMUM.

NO PONDING SHALL BE PRESENT IN THE PAR.

ANY VERTICAL LIP THAT OCCURS AT THE FLOW LINE SHALL NOT BE GREATER THAN 1/4 INCH.

1. FOR USE AT CURB CUTS WHERE THE PEDESTRIAN'S PATH OF TRAVEL IS ASSUMED NON PERPENDICULAR TO THE GUTTER FLOW LINE. RAMP TYPES INCLUDE: FANS, DEPRESSED CORNERS, & ONE WAY AND COMBINED DIRECTIONALS.
2. FOR USE AT CURB CUTS WHERE THE PEDESTRIAN'S PATH OF TRAVEL IS ASSUMED PERPENDICULAR TO THE GUTTER FLOW LINE. RAMP TYPES INCLUDE: PERPENDICULAR, TIERED PERPENDICULAR, PARALLEL, AND DIAGONAL RAMPS.
3. THERE SHALL BE NO VERTICAL DISCONTINUITIES GREATER THAN 1/4".
4. DRILL AND GROUT NO. 4 EPOXY-COATED 18" LONG TIE BARS AT 30" CENTER TO CENTER INTO EXISTING CONCRETE PAVEMENT.
5. ELEVATION CHANGE TAKES PLACE FROM THE EXISTING TO NEW FRONT OF GUTTER. PATCH IS USED TO MATCH THE NEW GUTTER FACE INTO THE EXISTING ROADWAY.
6. VARIABLE WIDTH FOR DIRECTIONAL CURB APPLICATIONS.
7. TOP FRONT OF GUTTER SHALL BE CONSTRUCTED FLUSH WITH PROPOSED ADJACENT PAVEMENT ELEVATION. PAR GUTTER SHALL NOT BE OVERLAID.
8. WHERE PLAN SPECIFIES, DRILL AND GROUT 2 - NO. 4 X 12" LONG REINFORCEMENT BARS (EPOXY COATED).

REVISION№ APPROVED 2-5-2014 STRUCTURE ENGINEER

REVISED: STATE DESIGN ENGINEER Christopher Ry APPROVED 8-6-2014

PEDESTRIAN CURB RAMP DETAILS

STANDARD PLAN 5-297.250 | 3 OF 5

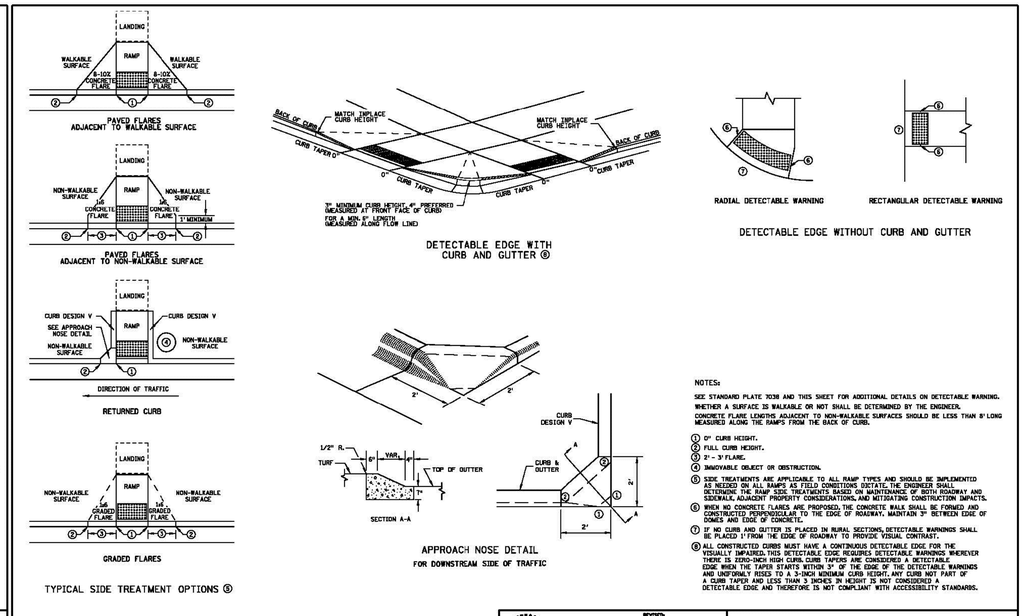

NOTES:

SEE STANDARD PLATE 7038 AND THIS SHEET FOR ADDITIONAL DETAILS ON DETECTABLE WARNING.

WHETHER A SURFACE IS WALKABLE OR NOT SHALL BE DETERMINED BY THE ENGINEER.

CONCRETE FLARE LENGTHS ADJACENT TO NON-WALKABLE SURFACES SHOULD BE LESS THAN 8' LONG MEASURED ALONG THE RAMPS FROM THE BACK OF CURB.

1. 0" CURB HEIGHT.
2. FULL CURB HEIGHT.
3. 3" - 3" FLARE.
4. IMMOVABLE OBJECT OR OBSTRUCTION.
5. SIDE TREATMENTS ARE APPLICABLE TO ALL RAMP TYPES AND SHOULD BE IMPLEMENTED AS NEEDED ON ALL RAMPS AS FIELD CONDITIONS DICTATE. THE ENGINEER SHALL DETERMINE THE RAMP SIDE TREATMENTS BASED ON MAINTENANCE OF BOTH ROADWAY AND SIDEWALK, ADJACENT PROPERTY CONSIDERATIONS, AND MITIGATING CONSTRUCTION IMPACTS.
6. WHEN NO CONCRETE FLARES ARE PROPOSED, THE CONCRETE WALK SHALL BE FORMED AND CONSTRUCTED PERPENDICULAR TO THE EDGE OF ROADWAY. MAINTAIN 3" BETWEEN EDGE OF DOMES AND EDGE OF CONCRETE.
7. IF NO CURB AND GUTTER IS PLACED IN RURAL SECTIONS, DETECTABLE WARNINGS SHALL BE PLACED 1' FROM THE EDGE OF ROADWAY TO PROVIDE VISUAL CONTRAST.
8. ALL CONSTRUCTED CURBS MUST HAVE A CONTINUOUS DETECTABLE EDGE FOR THE VISUALLY IMPAIRED. THIS DETECTABLE EDGE REQUIRES DETECTABLE WARNINGS WHEREVER THERE IS ZERO-INCH HIGH CURB. CURB TAPERS ARE CONSIDERED A DETECTABLE EDGE WHEN THE TAPER STARTS WITHIN 3" OF THE EDGE OF THE DETECTABLE WARNINGS AND UNIFORMLY RISES TO A 3-INCH MINIMUM CURB HEIGHT. ANY CURB NOT PART OF A CURB TAPER AND LESS THAN 3 INCHES IN HEIGHT IS NOT CONSIDERED A DETECTABLE EDGE AND THEREFORE IS NOT COMPLIANT WITH ACCESSIBILITY STANDARDS.

REVISION№ APPROVED 2-5-2014 STRUCTURE ENGINEER

REVISED: STATE DESIGN ENGINEER Christopher Ry APPROVED 8-6-2014

PEDESTRIAN CURB RAMP DETAILS

STANDARD PLAN 5-297.250 | 4 OF 5

CivilSite GROUP
4931 W. 35TH ST. SUITE 200
ST. LOUIS PARK, MN 55416
CivilSiteGroup.com
Matt Pavek 763-213-3944
Pat Sarver 952-250-2003

PROJECT

420 EAST HENNEPIN

420 East Hennepin, Minneapolis, MN

420 Hennepin Ave E LLC

333 Washington Avenue North, Suite 401, Minneapolis, MN

I HEREBY CERTIFY THAT THIS PLAN, SPECIFICATION, OR REPORT WAS PREPARED BY ME OR UNDER MY DIRECT SUPERVISION AND THAT I AM A DULY LICENSED PROFESSIONAL ENGINEER UNDER THE LAWS OF THE STATE OF MINNESOTA.

Matthew R. Pavek

DATE 2/23/15 LICENSE NO. 44263

ISSUE/SUBMITTAL SUMMARY

DATE	DESCRIPTION
1/30/15	MODIFIED PDR SUBMITTAL
2/23/15	CITY SUBMITTAL

REVISION SUMMARY

DATE	DESCRIPTION

CIVIL DETAILS

C5.3

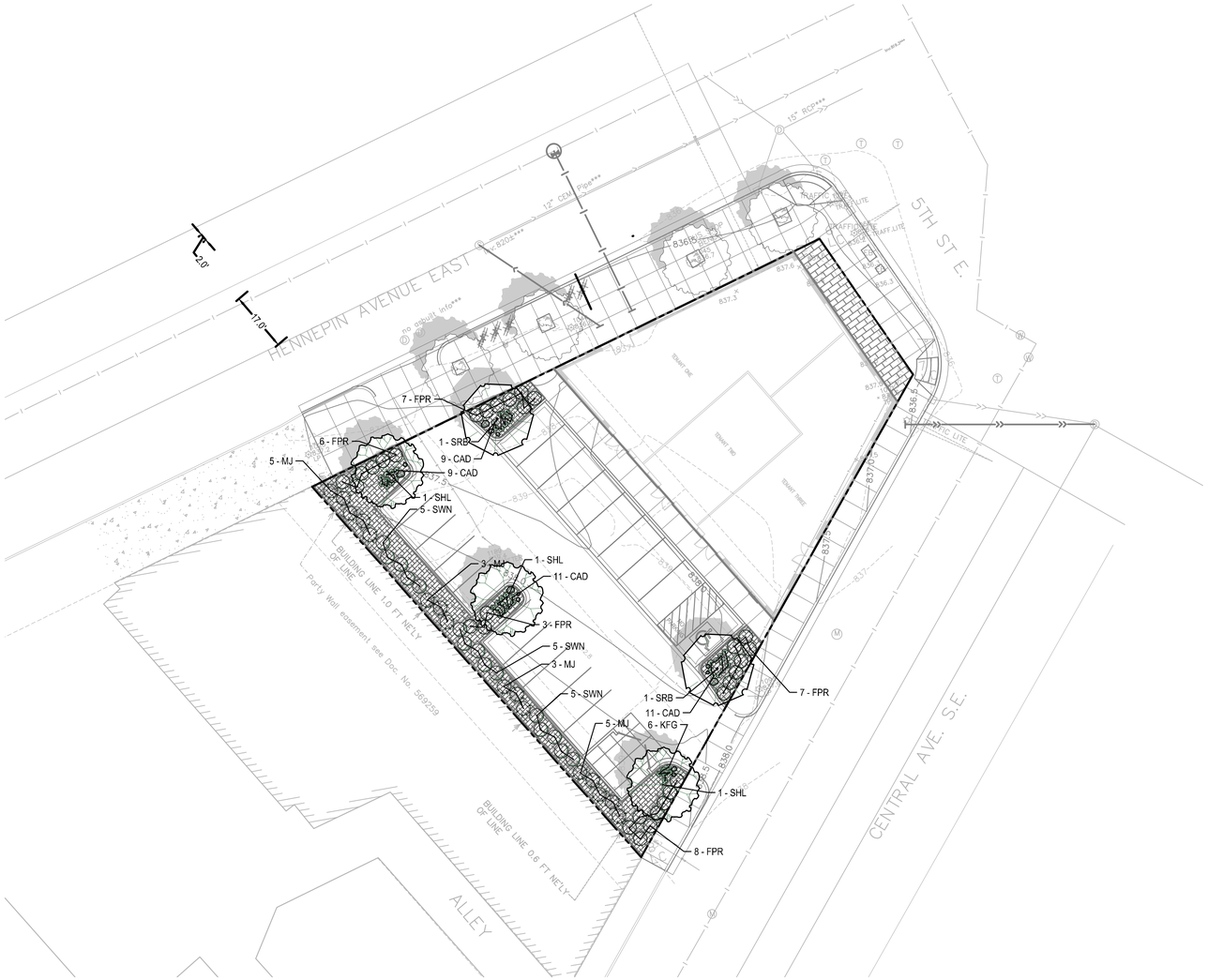

PLANT SCHEDULE - ENTIRE SITE

SYM	QUANT.	COMMON NAME	BOTANICAL NAME	SIZE	ROOT	COMMENTS
		DECIDUOUS TREES				
SHL	3	SKYLINE HONEYLOCUST	Gleditsia triacanthos 'Skycole'	2.5" CAL.	B&B	STRAIGHT LEADER
SRB	2	WHITESPIRE BIRCH	Betula populifolia 'Whitespire'	2.5" CAL.	B&B	STRAIGHT LEADER
		DECIDUOUS SHRUBS				
SWN	15	SUMMER WINE NINEBARK	Physocarpus opulifolius 'Summer Wine'	#5	CONT.	DENSE BRANCHING
FPR	31	PAVEMENT FOXI ROSE	Rosa 'Foxi Pavement'	#5	CONT.	DENSE BRANCHING
		EVERGREEN SHRUBS				
MJ	16	MEDORA JUNIPER	Juniperus scopulorum 'Medora'	24" HT.	CONT.	
		PERENNIALS, GRASSES & GROUND COVERS				
KFG	6	KARL FOERSTER GRASS	Calamagrostis x acutiflora "Karl Foerster"	#2	CONT.	
CAD	40	CHICAGO APACHE DAYLILY	Hemerocallis 'Chicago Apache'	#2	CONT.	

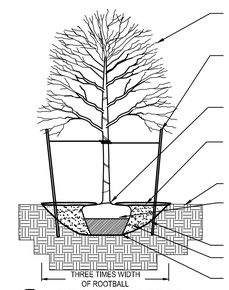

3 DECIDUOUS TREE
N T S

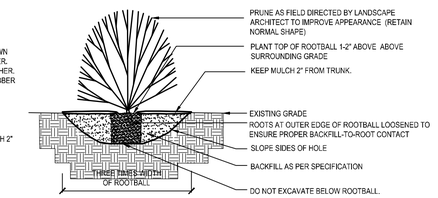

4 SHRUB
N T S

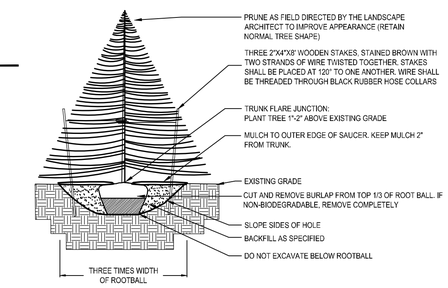

2 EVERGREEN TREE
N T S

LANDSCAPE NOTES:

1. ALL SHRUB BEDS SHALL BE MULCHED WITH 4" DEPTH (MIN. AFTER INSTALLATION AND/OR TOPDRESSING OPERATIONS) OF SHREDDED HARDWOOD MULCH OVER WEED BARRIER. OWNER TO APPROVE SAMPLE PRIOR TO INSTALLATION. STEEL EDGING AS SHOWN ON PLAN, SUBMIT SAMPLE FOR APPROVAL.
2. 24"-36" SIZED LIMESTONE BOULDERS, GENERALLY CUBE SHAPED, TO COMPLIMENT NEW LANDSCAPING. OWNER TO APPROVE BOULDER SAMPLE PRIOR TO INSTALLATION.
3. PLANT MATERIALS SHALL CONFORM WITH THE AMERICAN ASSOCIATION OF NURSERYMEN STANDARDS AND SHALL BE OF HARDY STOCK, FREE FROM DISEASE, DAMAGE AND DISFIGURATION. CONTRACTOR IS RESPONSIBLE FOR MAINTAINING PLUMBNESS OF PLANT MATERIAL FOR DURING OF ACCEPTANCE PERIOD.
4. UPON DISCOVERY OF A DISCREPANCY BETWEEN THE QUANTITY OF PLANTS SHOWN ON THE SCHEDULE AND THE QUANTITY SHOWN ON THE PLAN, THE PLAN SHALL GOVERN.
5. CONDITION OF VEGETATION SHALL BE MONITORED BY THE LANDSCAPE ARCHITECT THROUGHOUT THE DURATION OF THE CONTRACT. LANDSCAPE MATERIALS PART OF THE CONTRACT SHALL BE WARRANTED FOR TWO (2) FULL GROWING SEASONS FROM SUBSTANTIAL COMPLETION DATE.
6. AREAS DISTURBED BY CONSTRUCTION ACTIVITIES SHALL RECEIVE 4" LAYER LOAM AND SOD AS SPECIFIED UNLESS OTHERWISE NOTED ON THE DRAWINGS.
7. COORDINATE LOCATION OF VEGETATION WITH UNDERGROUND AND OVERHEAD UTILITIES, LIGHTING FIXTURES, DOORS AND WINDOWS. CONTRACTOR SHALL STAKE IN THE FIELD FINAL LOCATION OF TREES AND SHRUBS FOR REVIEW AND APPROVAL BY THE OWNER PRIOR TO INSTALLATION.
8. ALL PLANT MATERIALS SHALL BE WATERED AND MAINTAINED UNTIL ACCEPTANCE.
9. REPAIR AT NO COST TO OWNER ALL DAMAGE RESULTING FROM LANDSCAPE CONTRACTOR'S ACTIVITIES.
10. SWEEP AND MAINTAIN ALL PAVED SURFACES FREE OF DEBRIS GENERATED FROM LANDSCAPE CONTRACTOR'S ACTIVITIES.
11. REPAIR AT NO COST TO THE OWNER IRRIGATION SYSTEM DAMAGED FROM LANDSCAPE CONSTRUCTION ACTIVITIES.
12. PROVIDE SITE WIDE IRRIGATION SYSTEM DESIGN AND INSTALLATION. SYSTEM SHALL BE A FULLY PROGRAMMABLE SYSTEM CAPABLE OF ALTERNATE DATE WATERING. THE SYSTEM SHALL PROVIDE HEAD TO HEAD COVERAGE AND BE CAPABLE OF DELIVERING ONE INCH OF PRECIPITATION PER WEEK. SYSTEM SHALL EXTEND INTO THE PUBLIC RIGHT-OF-WAY TO THE EDGE OF PATHWAY/BACK OF CURB.
13. CONTRACTOR SHALL SECURE APPROVAL OF PROPOSED IRRIGATION SYSTEM INCLUDING PRICING FROM OWNER, PRIOR TO INSTALLATION.

LANDSCAPE CALCULATIONS:

PROPOSED LANDSCAPE AREA CALCULATION:
SITE AREA - BUILDING COVERAGE = OPEN SPACE

13,867.0 SF - 5,023.0 SF = 8,844.0 SF

20% OF OPEN SPACE = LANDSCAPE AREA

20% X 8,844.0 SF = 1,768.8 SF REQUIRED
22% X 8,844.0 SF = 1,906.0 SF PROVIDED

86.3% PROPOSED IMPERVIOUS RATIO

PROPOSED LANDSCAPE:
1 TREE/ 500 SF OF "LANDSCAPE AREA"
1,768.8 SF / 500 = 4 TREES REQUIRED
SEE PLANT SCHEDULE
1 SHRUB/100 SF OR "LANDSCAPE AREA"
1,768.8 SF / 100 = 18 SHRUBS REQUIRED
SEE PLANT SCHEDULE

LEGEND:

SHREDDED HARDWOOD MULCH (DK. BROWN), OVER FILTER FABRIC.

EXIST. STREET TREE TO REMAIN - PROTECT

PROPOSED CANOPY & EVERGREEN TREE SYMBOLS - SEE SCHEDULE AND PLAN FOR SPECIES AND PLANTING SIZES

PROPOSED DECIDUOUS AND EVERGREEN SHRUB SYMBOLS - SEE SCHEDULE AND PLAN FOR SPECIES AND PLANTING SIZES

PROPOSED PERENNIAL PLANT SYMBOLS - SEE SCHEDULE AND PLAN FOR SPECIES AND PLANTING SIZES

DECORATIVE BOULDERS, 18"-30" DIA.

GOPHER STATE ONE CALL
WWW.GOPHERSTATEONECALL.ORG
(800) 252-1166 TOLL FREE
(651) 454-0002 LOCAL

N

1" = 20'-0"
10'-0" 0 20'-0"

CivilSite GROUP
4931 W. 35TH ST. SUITE 200
ST. LOUIS PARK, MN 55416
CivilSiteGroup.com
Matt Pavek 763-213-3944
Pat Sarver 952-250-2003

PROJECT
420 EAST HENNEPIN
420 East Hennepin, Minneapolis, MN
420 Hennepin Ave E LLC
333 Washington Avenue North, Suite 401, Minneapolis, MN

I HEREBY CERTIFY THAT THIS PLAN, SPECIFICATION, OR REPORT WAS PREPARED BY ME OR UNDER MY DIRECT SUPERVISION AND THAT I AM A DULY LICENSED LANDSCAPE ARCHITECT UNDER THE LAWS OF THE STATE OF MINNESOTA.

Patrick J. Sarver
DATE 2/23/15 LICENSE NO. 24904

ISSUE/SUBMITTAL SUMMARY

DATE	DESCRIPTION
1/30/15	MODIFIED PDR SUBMITTAL
2/23/15	CITY SUBMITTAL

REVISION SUMMARY

DATE	DESCRIPTION

LANDSCAPE PLAN

L1.0

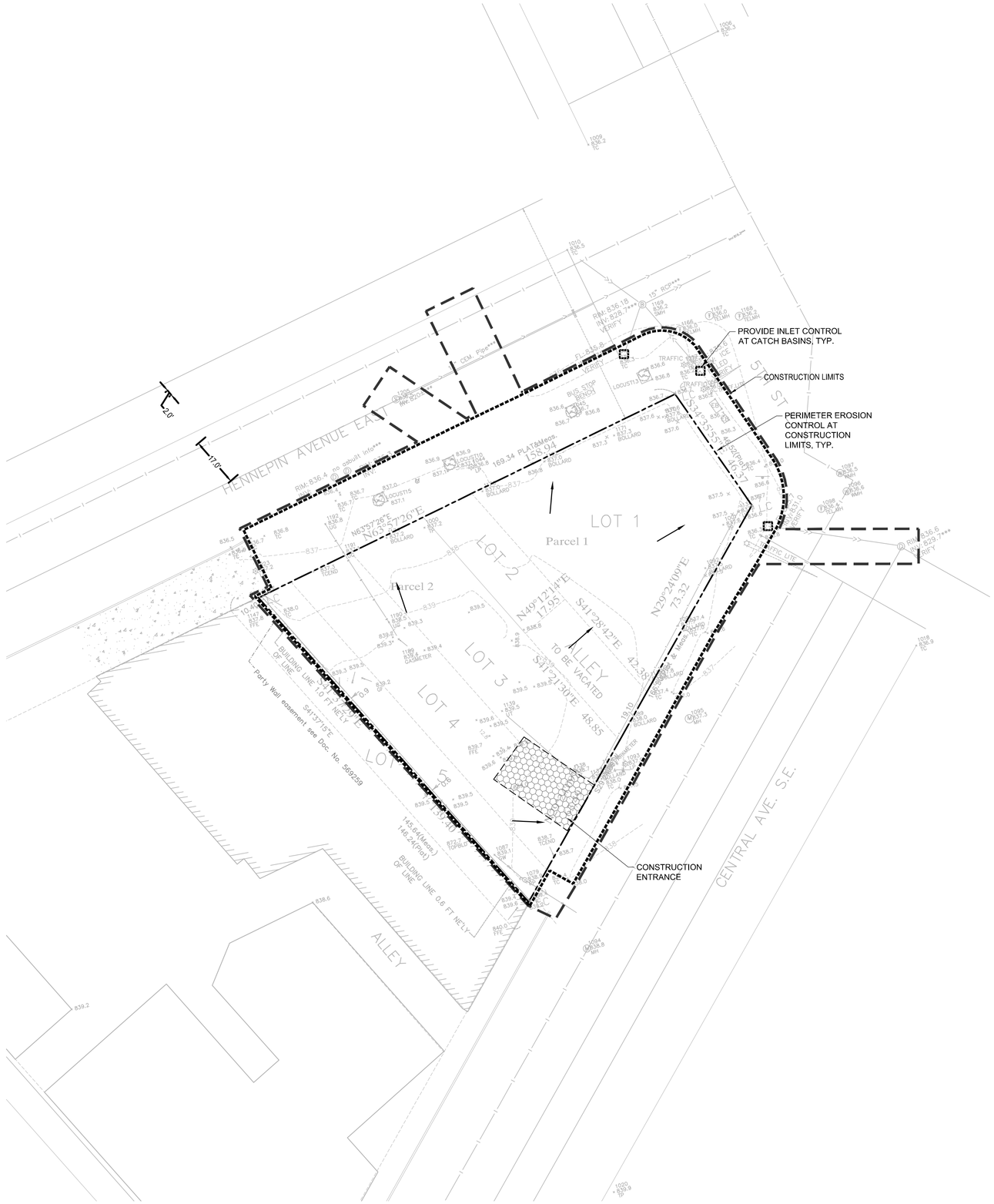

LEGEND:

- EX. 1' CONTOUR ELEVATION INTERVAL
- 1' CONTOUR ELEVATION INTERVAL
- EXISTING SPOT GRADE ELEVATION
- PROPOSED SPOT GRADE ELEVATION
- DRAINAGE ARROW
- SILT FENCE / BIOROLL - GRADING LIMIT
- INLET PROTECTION
- STABILIZED CONSTRUCTION ENTRANCE
- PROPOSED MANHOLE OR CATCH BASIN
- PROPOSED GATE VALVE
- PROPOSED FIRE HYDRANT
- PROPOSED SANITARY SEWER
- PROPOSED STORM SEWER
- EXISTING STORM SEWER
- EXISTING WATER MAIN
- EXISTING GAS MAIN
- EXISTING UNDERGROUND ELECTRIC
- EXISTING UNDERGROUND CABLE
- EXISTING MANHOLE
- EXISTING CATCH BASIN
- EXISTING HYDRANT
- EXISTING STOPBOX
- EXISTING GATE VALVE
- EXISTING ELECTRIC BOX
- EXISTING LIGHT
- EXISTING GAS METER
- EXISTING GAS VALVE

SWPPP NOTES:

1. THIS PROJECT IS LESS THAN ONE ACRE AND AN MPCA NPDES PERMIT IS NOT REQUIRED. AN EROSION CONTROL PERMIT IS REQUIRED FROM THE CITY OF MINNEAPOLIS.

2. SEE SHEETS SW1.0 - SW1.3 FOR ALL EROSION CONTROL NOTES, DESCRIPTIONS, AND PRACTICES.

3. SEE GRADING PLAN FOR ADDITIONAL GRADING AND EROSION CONTROL NOTES.

4. CONTRACTOR IS RESPONSIBLE FOR SWPPP IMPLEMENTATION, INSPECTIONS, AND COMPLIANCE WITH NPDES PERMIT.

GOPHER STATE ONE CALL
WWW.GOPHERSTATEONECALL.ORG
(800) 252-1166 TOLL FREE
(651) 454-0002 LOCAL

1" = 20'-0"
10'-0" 0 20'-0"

CivilSite GROUP
4931 W. 35TH ST. SUITE 200
ST. LOUIS PARK, MN 55416
CivilSiteGroup.com
Matt Pavek 763-213-3944
Pat Sarver 952-250-2003

PROJECT

420 EAST HENNEPIN

420 East Hennepin, Minneapolis, MN

420 Hennepin Ave E LLC

333 Washington Avenue North, Suite 401, Minneapolis, MN

I HEREBY CERTIFY THAT THIS PLAN, SPECIFICATION, OR REPORT WAS PREPARED BY ME OR UNDER MY DIRECT SUPERVISION AND THAT I AM A DULY LICENSED PROFESSIONAL ENGINEER UNDER THE LAWS OF THE STATE OF MINNESOTA.

Matthew R. Pavek

DATE 2/23/15 LICENSE NO. 44263

ISSUE/SUBMITTAL SUMMARY

DATE	DESCRIPTION
1/30/15	MODIFIED PDR SUBMITTAL
2/23/15	CITY SUBMITTAL

REVISION SUMMARY

DATE	DESCRIPTION

SWPPP - EXISTING CONDITIONS

SW1.0

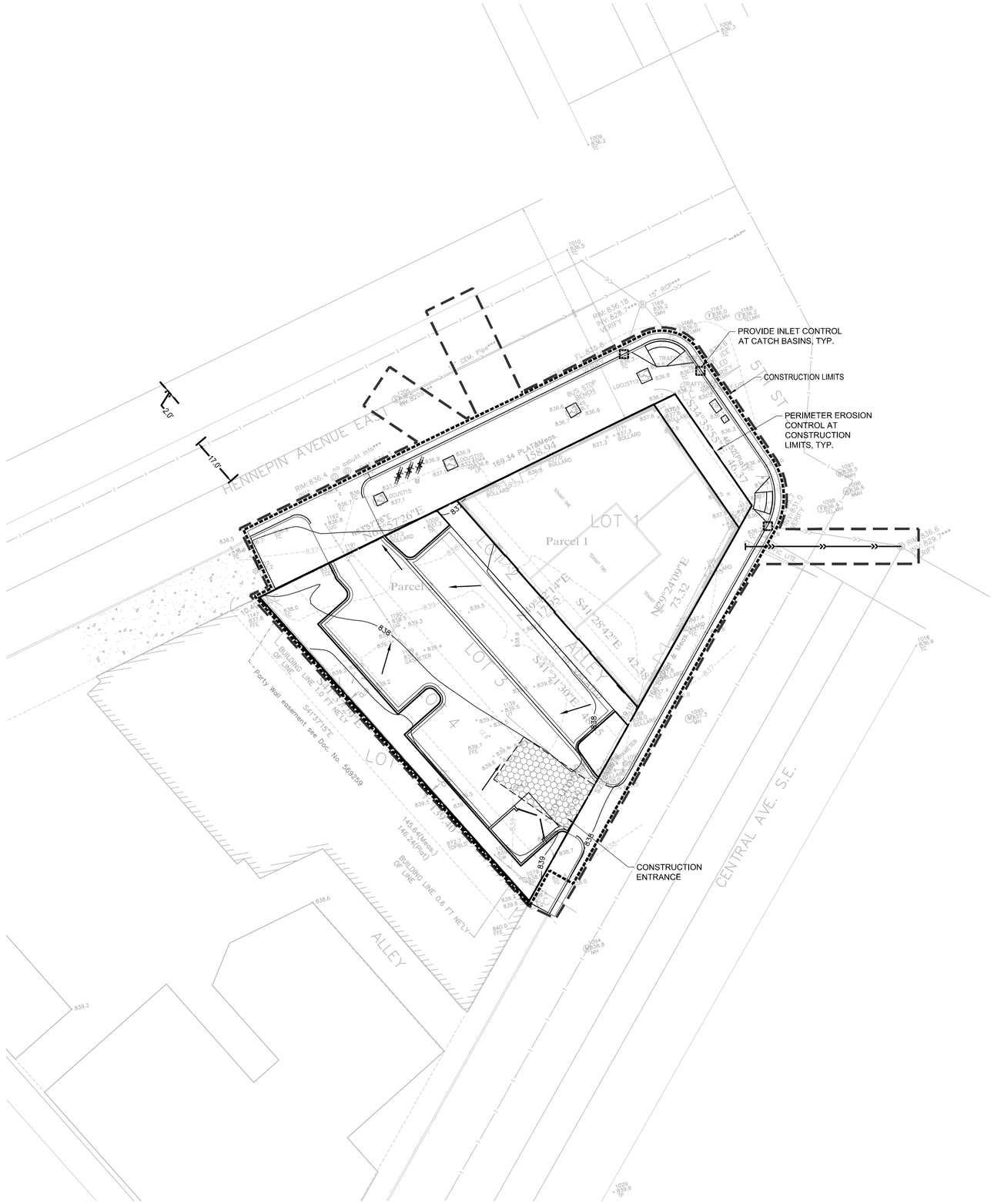
HENNEPIN AVENUE EAST
CENTRAL AVE. S.E.
ALLEY
LOT 1
Parcel 1
Parcel 2
LOT 3
LOT 4
LOT 5
LOT 6
LOT 7
LOT 8
LOT 9
LOT 10
LOT 11
LOT 12
LOT 13
LOT 14
LOT 15
LOT 16
LOT 17
LOT 18
LOT 19
LOT 20
LOT 21
LOT

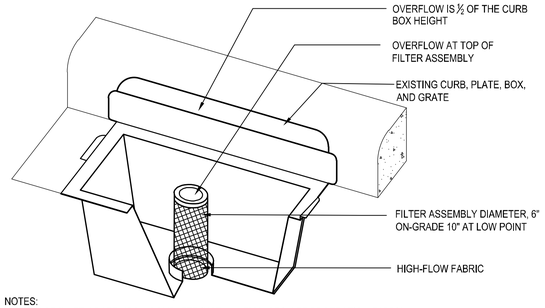

NOTES:
1. REPLACE INLET GRATE UPON COMPLETE INSTALLATION OF INLET PROTECTION FABRIC.
2. CONTRACTOR SHALL REMOVE ALL ACCUMULATED SEDIMENT AND DEBRIS FROM THE SURFACE OF THE SYSTEM AFTER EACH STORM EVENT AND AT THE COMPLETION OF THE CONTRACT.
3. REFERENCE APPLE VALLEY STANDARD PLATE ERO-4C.

1 CURB INLET FILTER
N T S

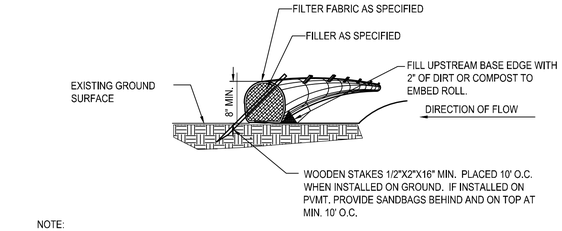

NOTE:
1. COMPOST FILTER LOGS (BIO ROLLS) SHALL BE FILTREXX EROSION CONTROL SOXX OR APPROVED EQUAL.
2. COMPOST FILLER TO BE MADE FROM A COMPOST BLEND 30%-40% GRADE 2 (SPEC 3890) AND 60%-70% PARTIALLY DECOMPOSED WOOD CHIPS, PER MNDOT SPEC 3897.
3. FILTER FABRIC SHALL BE GEOTEXTILE KNITTED MATERIAL WITH MAX. OPENINGS OF 3/8".
4. IF MULTIPLE ROLLS NEEDED, OVERLAP BY MIN. 12" AT ENDS AND STAKE.
5. SILT SHALL BE REMOVED ONCE IT REACHES 80% OF THE HEIGHT OF THE ROLL OR AS DEEMED NECESSARY BY SITE CONTRACTOR TO MAINTAIN PROPER FUNCTION.

4 SEDIMENT BIO-ROLL / COMPOST FILTER LOG
N T S

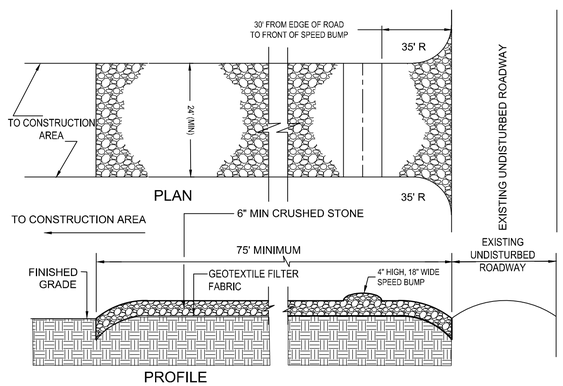

NOTES:
1. PROVIDE APPROPRIATE TRANSITION BETWEEN STABILIZED CONSTRUCTION ENTRANCE AND UNDISTURBED ROADWAY.
2. THE ENTRANCE SHALL BE MAINTAINED IN A CONDITION WHICH WILL PREVENT TRACKING OR FLOWING OF SEDIMENT ONTO UNDISTURBED ROADWAY. THIS MAY REQUIRE PERIODIC TOP DRESSING WITH ADDITIONAL STONE OR ADDING STONE TO THE LENGTH OF THE ENTRANCE.
3. REPAIR AND CLEANOUT MEASURES USED TO TRAP SEDIMENT.
4. ALL SEDIMENT SPILLED, DROPPED, WASHED, OR TRACKED ONTO UNDISTURBED ROADWAY SHALL BE REMOVED AS DIRECTED BY THE ENGINEER.
5. FINAL LOCATION AND INSTALLATION SHALL BE COORDINATED WITH THE CITY PRIOR TO CONSTRUCTION ACTIVITIES.
6. CRUSHED STONE SHALL BE 1-1/2" DIA. CLOSE GRADED, AND IN ACCORDANCE TO MNDOT SECTION 2118.

2 STABILIZED CONSTRUCTION ACCESS
N T S

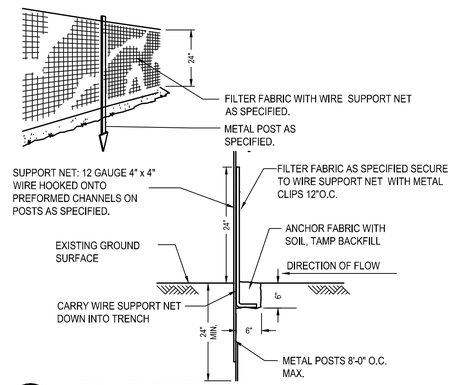

5 SEDIMENT FENCE
N T S

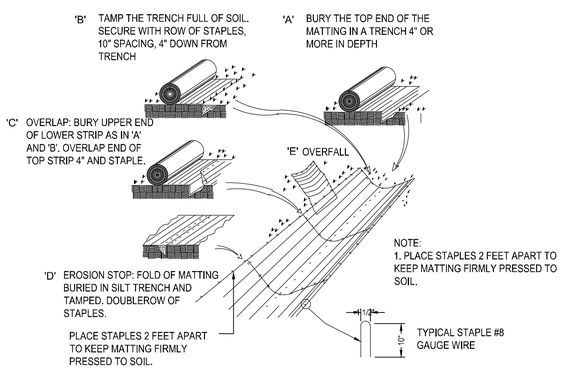

3 EROSION BLANKET
N T S

CivilSite GROUP
4931 W. 35TH ST. SUITE 200
ST. LOUIS PARK, MN 55416
CivilSiteGroup.com
Matt Pavek 763-213-3944
Pat Sarver 952-250-2003

PROJECT
420 EAST HENNEPIN
420 East Hennepin, Minneapolis, MN
420 Hennepin Ave E LLC
333 Washington Avenue North, Suite 401, Minneapolis, MN

I HEREBY CERTIFY THAT THIS PLAN, SPECIFICATION, OR REPORT WAS PREPARED BY ME OR UNDER MY DIRECT SUPERVISION AND THAT I AM A DULY LICENSED PROFESSIONAL ENGINEER UNDER THE LAWS OF THE STATE OF MINNESOTA.

Matthew R. Pavek
DATE 2/23/15 LICENSE NO. 44263

ISSUE/SUBMITTAL SUMMARY

DATE	DESCRIPTION
1/30/15	MODIFIED PDR SUBMITTAL
2/23/15	CITY SUBMITTAL

REVISION SUMMARY

DATE	DESCRIPTION

SWPPP - DETAILS

SW1.2

GENERAL SWPPP REQUIREMENTS AND NOTES:

THE CONTRACTOR AND ALL SUBCONTRACTORS INVOLVED WITH A CONSTRUCTION ACTIVITY THAT DISTURBS SITE SOIL OR WHO IMPLEMENT A POLLUTANT CONTROL MEASURE IDENTIFIED IN THE STORM WATER POLLUTION PREVENTION PLAN (SWPPP) MUST COMPLY WITH THE REQUIREMENTS OF THE NATIONAL POLLUTION DISCHARGE ELIMINATION SYSTEM (NPDES) GENERAL PERMIT (DATED AUGUST 1, 2013 # MNR100001 PAGES 1-35) AND ANY LOCAL GOVERNING AGENCY HAVING JURISDICTION CONCERNING EROSION AND SEDIMENTATION CONTROL.

PART III STORMWATER DISCHARGE DESIGN REQUIREMENTS

SWPPP (PART III.A)

THE NATURE OF THIS PROJECT WILL BE CONSISTENT WITH WHAT IS REPRESENTED IN THIS SET OF CONSTRUCTION PLANS AND SPECIFICATIONS. SEE THE SWPPP PLAN SHEETS AND SWPPP NARRATIVE (ATTACHMENT A: CONSTRUCTION SWPPP TEMPLATE) FOR ADDITIONAL SITE SPECIFIC SWPPP INFORMATION. THE PLANS SHOW LOCATIONS AND TYPES OF ALL TEMPORARY AND PERMANENT EROSION PREVENTION AND SEDIMENT CONTROL BMP'S. STANDARD DETAILS ARE ATTACHED TO THIS SWPPP DOCUMENT.

THE INTENDED SEQUENCING OF MAJOR CONSTRUCTION ACTIVITIES IS AS FOLLOWS:
1. INSTALL STABILIZED ROCK CONSTRUCTION ENTRANCE
2. INSTALLATION OF SILT FENCE AROUND SITE
3. INSTALL ORANGE CONSTRUCTION FENCING AROUND INFILTRATION AREAS.
4. CLEAR AND GRUB FOR TEMPORARY SEDIMENT BASIN / POND INSTALL
5. CONSTRUCT TEMPORARY SEDIMENT BASIN / POND (PART III.B)
6. CLEAR AND GRUB REMAINDER OF SITE
7. STRIP AND STOCKPILE TOPSOIL
8. ROUGH GRADING OF SITE
9. STABILIZE DENUDED AREAS AND STOCKPILES
10. INSTALL SANITARY SEWER, WATER MAIN STORM SEWER AND SERVICES
11. INSTALL SILT FENCE / INLET PROTECTION AROUND CB'S
12. INSTALL STREET SECTION
13. INSTALL CURB AND GUTTER
14. BITUMINOUS ON STREETS
15. FINAL GRADE BOULEVARD, INSTALL SEED AND MULCH
16. REMOVE ACCUMULATED SEDIMENT FROM BASIN / POND
17. FINAL GRADE POND / INFILTRATION BASINS (DO NOT COMPACT SOILS IN INFILTRATION AREAS.) (PART III.C)
18. WHEN ALL CONSTRUCTION ACTIVITY IS COMPLETE AND THE SITE IS STABILIZED BY EITHER SEED OR SOD/LANDSCAPING, REMOVE SILT FENCE AND RESEED ANY AREAS DISTURBED BY THE REMOVAL.

RECORDS RETENTION (PART III.E):

THE SWPPP (ORIGINAL OR COPIES) INCLUDING, ALL CHANGES TO IT, AND INSPECTIONS AND MAINTENANCE RECORDS MUST BE KEPT AT THE SITE DURING CONSTRUCTION BY THE PERMITTEE WHO HAS OPERATIONAL CONTROL OF THAT PORTION OF THE SITE. THE SWPPP CAN BE KEPT IN EITHER THE FIELD OFFICE OR IN AN ON SITE VEHICLE DURING NORMAL WORKING HOURS.

ALL OWNER(S) MUST KEEP THE SWPPP, ALONG WITH THE FOLLOWING ADDITIONAL RECORDS, ON FILE FOR THREE (3) YEARS AFTER SUBMITTAL OF THE NOT AS OUTLINED IN PART II.C. THIS DOES NOT INCLUDE ANY RECORDS AFTER SUBMITTAL OF THE NOT.

1. THE FINAL SWPPP;
2. ANY OTHER STORMWATER RELATED PERMITS REQUIRED FOR THE PROJECT;
3. RECORDS OF ALL INSPECTION AND MAINTENANCE CONDUCTED DURING CONSTRUCTION (SEE PART IV.E. INSPECTIONS AND MAINTENANCE);
4. ALL PERMANENT OPERATION AND MAINTENANCE AGREEMENTS THAT HAVE BEEN IMPLEMENTED, INCLUDING ALL RIGHT OF WAY, CONTRACTS, COVENANTS AND OTHER BINDING REQUIREMENTS REGARDING PERPETUAL MAINTENANCE; AND
5. ALL REQUIRED CALCULATIONS FOR DESIGN OF THE TEMPORARY AND PERMANENT STORMWATER MANAGEMENT SYSTEMS.

PART IV. CONSTRUCTION ACTIVITY REQUIREMENTS

EROSION PREVENTION (PART IV.B):

THE CONTRACTOR IS RESPONSIBLE FOR PLANING FOR AND IMPLEMENTING APPROPRIATE CONSTRUCTION PHASING, VEGETATIVE BUFFER STRIPS, HORIZONTAL SLOPE GRADING, AND OTHER CONSTRUCTION PRACTICES THAT MINIMIZE EROSION, SO THAT THE INSPECTION AND MAINTENANCE REQUIREMENTS OF PART IV.E. ARE COMPLIED WITH. THE LOCATION OF AREAS NOT TO BE DISTURBED MUST BE DELINEATED (E.G. WITH FLAGS, STAKES, SIGNS, SILT FENCE ETC.) ON THE DEVELOPMENT SITE BEFORE WORK BEGINS.

ALL EXPOSED SOIL AREAS MUST BE STABILIZED AS SOON AS POSSIBLE TO LIMIT SOIL EROSION BUT NO LATER THAN THE END OF THE NEXT WORK DAY WHEN EARTH-DISTURBING ACTIVITIES WILL CEASE FOR AT LEAST 14 DAYS. TEMPORARY STOCKPILES WITHOUT SIGNIFICANT SILT, CLAY OR ORGANIC COMPONENTS (E.G., CLEAN AGGREGATE STOCKPILES, DEMOLITION CONCRETE STOCKPILES, SAND STOCKPILES) AND THE CONSTRUCTED BASE COMPONENTS OF ROADS, PARKING LOTS AND SIMILAR SURFACES ARE EXEMPT FROM THIS REQUIREMENT BUT MUST COMPLY WITH PART IV.C.5.

SOILS WITHIN 200 FEET OF A PUBLIC WATER (AS DESIGNATED BY THE MINNESOTA DNR) MUST BE STABILIZED WITHIN 24 HOURS DURING FISH SPAWNING TIMES.

THE NORMAL WETTED PERIMETER OF ANY TEMPORARY OR PERMANENT DRAINAGE DITCH OR SWALE THAT DRAINS WATER FROM ANY PORTION OF THE CONSTRUCTION SITE, OR DIVERTS WATER AROUND THE SITE, MUST BE STABILIZED WITHIN 200 LINEAL FEET FROM THE PROPERTY EDGE, OR FROM THE POINT OF DISCHARGE INTO ANY SURFACE WATER. STABILIZATION OF THE LAST 200 LINEAL FEET MUST BE COMPLETED WITHIN 24 HOURS AFTER CONNECTING TO A SURFACE WATER.

STABILIZATION OF THE REMAINING PORTIONS OF ANY TEMPORARY OR PERMANENT DITCHES OR SWALES MUST BE COMPLETE WITHIN 14 DAYS AFTER CONNECTING TO A SURFACE WATER AND CONSTRUCTION IN THAT PORTION OF THE DITCH HAS TEMPORARILY OR PERMANENTLY CEASED.

TEMPORARY OR PERMANENT DITCHES OR SWALES THAT ARE BEING USED AS A SEDIMENT CONTAINMENT SYSTEM (WITH PROPERLY DESIGNED ROCK DITCH CHECKS, BIO ROLLS, SILT DIKES ETC.) DO NOT NEED TO BE STABILIZED. THESE AREAS MUST BE STABILIZED WITHIN 24 HOURS AFTER NO LONGER BEING USED AS A SEDIMENT CONTAINMENT SYSTEM.

PIPE OUTLETS MUST BE PROVIDED WITH TEMPORARY OR PERMANENT ENERGY DISSIPATION WITHIN 24 HOURS AFTER CONNECTION TO A SURFACE WATER.

SEED NOTES (PART III.A.4.A):

ALL SEED MIXES AND APPLICATION SHALL BE IN ACCORDANCE WITH THE MNDOT SEEDING MANUAL.

GENERAL RECOMMENDATIONS:
IMMEDIATELY BEFORE SEEDING THE SOIL SHALL BE TILLED TO A MINIMUM DEPTH OF 3 INCHES.

TEMPORARY EROSION CONTROL SEEDING, MULCHING & BLANKET.

SEED
- TEMPORARY SEED SHALL BE MNDOT SEED MIX 21-112 (WINTER WHEAT COVER CROP) FOR WINTER AND 21-111 (OATS COVER CROP) FOR SPRING/SUMMER APPLICATIONS. BOTH SEED MIXES SHALL BE APPLIED AT A SEEDING RATE OF 100 LBS/ACRE.

MULCH
- IMMEDIATELY AFTER SEEDING, WITHIN 24 HOURS, MNDOT TYPE 1 MULCH SHOULD BE APPLIED TO PROTECT AND ENHANCE SEED GERMINATION. MULCH SHALL BE APPLIED AT 90% COVERAGE (2 TONS PER ACRE OF STRAW MULCH)

SLOPES
- 3:1 (HORIZ/VERT) OR FLATTER MUCH SHALL BE COVERED WITH MULCH
- SLOPES STEEPER THAN 3:1 OR DITCH BOTTOMS SHALL BE COVERED WITH EROSION CONTROL BLANKET.
- SEE PLAN FOR MORE DETAILED DITCH AND STEEP SLOPE EROSION CONTROL TREATMENTS.

SEDIMENT CONTROL (PART IV.C):

SEDIMENT CONTROL PRACTICES MUST MINIMIZE SEDIMENT FROM ENTERING SURFACE WATERS, INCLUDING CURB AND GUTTER SYSTEMS AND STORM SEWER INLETS.

a. TEMPORARY OR PERMANENT DRAINAGE DITCHES AND SEDIMENT BASINS THAT ARE DESIGNED AS PART OF A SEDIMENT CONTAINMENT SYSTEM (E.G., DITCHES WITH ROCK CHECK DAMS) REQUIRE SEDIMENT CONTROL PRACTICES ONLY AS APPROPRIATE FOR SITE CONDITIONS.

b. IF THE DOWN GRADIENT TREATMENT SYSTEM IS OVERLOADED, ADDITIONAL UPGRADIENT SEDIMENT CONTROL PRACTICES OR REDUNDANT BMPS MUST BE INSTALLED TO ELIMINATE THE OVERLOADING, AND THE SWPPP MUST BE AMENDED TO IDENTIFY THESE ADDITIONAL PRACTICES AS REQUIRED IN PART III.A.4, A. THROUGH C.

c. IN ORDER TO MAINTAIN SHEET FLOW AND MINIMIZE RILLS AND/OR GULLIES, THERE SHALL BE NO UNBROKEN SLOPE LENGTH OF GREATER THAN 75 FEET FOR SLOPES WITH A GRADE OF 3:1 OR STEEPER.

SEDIMENT CONTROL PRACTICES MUST BE ESTABLISHED ON ALL DOWN GRADIENT PERIMETERS BEFORE ANY UPGRADIENT LAND DISTURBING ACTIVITIES BEGIN. THESE PRACTICES SHALL REMAIN IN PLACE UNTIL FINAL STABILIZATION HAS BEEN ESTABLISHED IN ACCORDANCE WITH PART IV.G.

THE TIMING OF THE INSTALLATION OF SEDIMENT CONTROL PRACTICES MAY BE ADJUSTED TO ACCOMMODATE SHORT-TERM ACTIVITIES SUCH AS CLEARING OR GRUBBING, OR PASSAGE OF VEHICLES. ANY SHORT-TERM ACTIVITY MUST BE COMPLETED AS QUICKLY AS POSSIBLE AND THE SEDIMENT CONTROL PRACTICES MUST BE INSTALLED IMMEDIATELY AFTER THE ACTIVITY IS COMPLETED. HOWEVER, SEDIMENT CONTROL PRACTICES MUST BE INSTALLED BEFORE THE NEXT PRECIPITATION EVENT EVEN IF THE ACTIVITY IS NOT COMPLETE.

ALL STORM DRAIN INLETS MUST BE PROTECTED BY APPROPRIATE BMPS DURING CONSTRUCTION UNTIL ALL SOURCES WITH POTENTIAL FOR DISCHARGING TO THE INLET HAVE BEEN STABILIZED. INLET PROTECTION MAY BE REMOVED FOR A PARTICULAR INLET IF A SPECIFIC SAFETY CONCERN (STREET FLOODING/FREEZING) HAS BEEN IDENTIFIED AND THE PERMITTEE(S) HAVE RECEIVED WRITTEN CORRESPONDENCE FROM THE JURISDICTIONAL AUTHORITY (E.G. CITY/COUNTY/TOWNSHIP/MNDOT ENGINEER) VERIFYING THE NEED FOR REMOVAL. THE WRITTEN CORRESPONDENCE MUST BE DOCUMENTED IN THE SWPPP OR AVAILABLE WITHIN 72 HOURS UPON REQUEST. WHEN WRITTEN CORRESPONDENCE CAN NOT BE OBTAINED IN A TIMELY MANNER, THE SPECIFIC INLET PROTECTION CAN BE REMOVED TO ALLEVIATE THE IMMEDIATE SAFETY CONCERN. HOWEVER, EFFORTS TO OBTAIN WRITTEN CORRESPONDENCE MUST BE DOCUMENTED IN THE SWPPP AND AVAILABLE WITHIN 72 HOURS UPON REQUEST. PERMISSION TO REMOVE INLET PROTECTION BASED ON A SPECIFIC SAFETY CONCERN MUST STILL BE OBTAINED FROM THE JURISDICTIONAL AUTHORITY WITHIN 30 DAYS OF REMOVAL.

TEMPORARY SOIL STOCKPILES MUST HAVE SILT FENCE OR OTHER EFFECTIVE SEDIMENT CONTROLS, AND
CANNOT BE PLACED IN SURFACE WATERS, INCLUDING STORMWATER CONVEYANCES SUCH AS CURB AND GUTTER SYSTEMS, OR CONDUITS AND DITCHES UNLESS THERE IS A BYPASS IN PLACE FOR THE STORMWATER.

VEHICLE TRACKING OF SEDIMENT FROM THE CONSTRUCTION SITE (OR ONTO STREETS WITHIN THE SITE) MUST BE MINIMIZED BY BMPS SUCH AS STONE PADS, CONCRETE OR STEEL WASH RACKS, OR EQUIVALENT SYSTEMS. STREET SWEEPING MUST BE USED IF SUCH BMPS ARE NOT ADEQUATE TO PREVENT SEDIMENT FROM BEING TRACKED ONTO THE STREET (SEE PART IV.E.4.D.).

THE PERMITEE MUST MINIMIZE SOIL COMPACTION AND, UNLESS INFEASIBLE, PRESERVE TOPSOIL. MINIMIZING SOIL COMPACTION IS NOT REQUIRED WHERE THE FUNCTION OF THE SPECIFIC AREA OF THE SITE DICTATES THAT IT BE COMPACTED. METHODS FOR MINIMIZING COMPACTION INCLUDE THE USE OF TRACKED EQUIPMENT, AND STAYING OFF OF AREAS TO BE LEFT UN-COMPACTED. METHODS TO PRESERVE TOPSOIL INCLUDE STRIPPING AND STOCKPILING TOPSOIL PRIOR TO GRADING OR EXCAVATION OPERATIONS.

THE PERMITTEE MUST INSTALL TEMPORARY SEDIMENTATION BASINS AS REQUIRED IN PART III.B. OF THIS PERMIT.

DEWATERING AND BASIN DRAINING (PART IV.D):

DEWATERING OR BASIN DRAINING (E.G., PUMPED DISCHARGES, TRENCH/DITCH CUTS FOR DRAINAGE) RELATED TO THE CONSTRUCTION ACTIVITY THAT MAY HAVE TURBID OR SEDIMENT LADEN DISCHARGE WATER MUST BE DISCHARGED TO A TEMPORARY OR PERMANENT SEDIMENTATION BASIN ON THE PROJECT SITE WHENEVER POSSIBLE. IF THE WATER CANNOT BE DISCHARGED TO A SEDIMENTATION BASIN PRIOR TO ENTERING THE SURFACE WATER, IT MUST BE TREATED WITH THE APPROPRIATE BMP'S SUCH THAT THE DISCHARGE DOES NOT ADVERSELY AFFECT THE RECEIVING WATER, DOWNSTREAM LANDOWNERS OR WETLANDS. THE CONTRACTOR MUST ENSURE THAT DISCHARGE POINTS ARE ADEQUATELY PROTECTED FROM EROSION AND SCOUR. THE DISCHARGE MUST BE DISPERSED OVER NATURAL ROCK RIPRAP, SAND BAGS, PLASTIC SHEATHING OR OTHER ACCEPTED ENERGY DISSIPATION MEASURES. ADEQUATE SEDIMENTATION CONTROL MEASURES ARE REQUIRED FOR DISCHARGE WATER THAT CONTAINS SUSPENDED SOLIDS.

FILTER BACKWASH WATERS MUST BE HAULED AWAY FOR DISPOSAL, RETURNED TO THE BEGINNING OF THE TREATMENT PROCESS, OR INCORPORATE INTO THE SITE IN A MANNER THAT DOES NOT CAUSE EROSION. DISCHARGE OF THE BACKWASH WATER TO SANITARY SEWER IS ALLOWED WITH PERMISSION OF THE SANITARY SEWER AUTHORITY.

INSPECTIONS AND MAINTENANCE (PART IV.E):

THE CONTRACTOR IS RESPONSIBLE AT ALL TIMES FOR THE MAINTENANCE AND PROPER OPERATION OF EROSION AND SEDIMENT CONTROL FACILITIES. THE CONTRACTOR SHALL AT A MINIMUM, INSPECT, MAINTAIN AND REPAIR ALL DISTURBED SURFACES AND ALL EROSION AND SEDIMENT CONTROL FACILITIES AND SOIL STABILIZATION MEASURES ONCE EVERY SEVEN (7) DAYS DURING ACTIVE CONSTRUCTION AND WITHIN 24 HOURS FOLLOWING A RAINFALL OF 0.5 INCHES OR GREATER AND WITHIN 7 DAYS AFTER THAT. CONTINUE INSPECTION ACTIVITIES UNTIL LAND-DISTURBING ACTIVITY HAS CEASED. THEREAFTER THE CONTRACTOR SHALL PERFORM THESE RESPONSIBILITIES AT LEAST WEEKLY UNTIL VEGETATIVE COVER IS ESTABLISHED. INSPECTIONS MUST INCLUDE STABILIZED AREAS, EROSION PREVENTION AND SEDIMENT CONTROL BMP'S AND INFILTRATION AREAS.

BASED ON INSPECTION RESULTS THE CONTRACTOR MAY MODIFY THE SWPPP IN ORDER TO PREVENT POLLUTANTS FROM LEAVING THE SITE VIA STORM WATER RUNOFF. THIS MODIFICATION MUST BE MADE WITHIN 7 CALENDAR DAYS OF THE INSPECTION UNLESS OTHERWISE REQUIRED BY THE TERMS OF THE PERMIT, LEGAL, REGULATORY, OR PHYSICAL ACCESS CONSTRAINTS.

INSPECTION REPORTS MUST BE RECORDED WITHIN 24 HOURS IN WRITING AND KEPT ON FILE BY THE CONTRACTOR AS AN INTEGRAL PART OF THE SWPPP ON SITE AND THEN FOR AT LEAST 3 YEARS FROM THE DATE OF COMPLETION OF THIS PROJECT.

ALL PERIMETER CONTROL DEVICES MUST BE REPAIRED, REPLACED OR SUPPLEMENTED WHEN THEY BECOME NONFUNCTIONAL OR THE SEDIMENT REACHES 1/2 OF THE HEIGHT OF THE DEVICE. THESE REPAIRS MUST BE MADE BY THE END OF THE NEXT BUSINESS DAY AFTER DISCOVERY, OR THEREAFTER AS SOON AS FIELD CONDITIONS ALLOW ACCESS.

REMOVE ALL DELTAS AND SEDIMENT DEPOSITED IN SURFACE WATERS, INCLUDING DRAINAGE WAYS, CATCH BASINS, AND OTHER DRAINAGE SYSTEMS, AND RESTABILIZE THE AREAS WHERE SEDIMENT REMOVAL RESULTS IN EXPOSED TOPSOIL. THIS REMOVAL AND STABILIZATION MUST TAKE PLACE WITHIN 7 DAYS OF DISCOVERY UNLESS PRECLUDED BY LEGAL, REGULATORY, OR PHYSICAL ACCESS CONSTRAINTS.

SEE (ATTACHMENT A: CONSTRUCTION SWPPP TEMPLATE) FOR SITE SPECIFIC INSPECTIONS AND MAINTENANCE REQUIREMENTS.

POLLUTION PREVENTION MANAGEMENT (PART IV.F):

THE CONTRACTOR SHALL IMPLEMENT THE FOLLOWING POLLUTION PREVENTION MANAGEMENT MEASURES ON THE SITE;

SOLID WASTE: COLLECTED SEDIMENT, ASPHALT AND CONCRETE MILLINGS, FLOATING DEBRIS, PAPER, PLASTIC, FABRIC, CONSTRUCTION AND DEMOLITION DEBRIS AND OTHER WASTES MUST BE DISPOSED OF PROPERLY AND MUST COMPLY WITH MINNESOTA POLLUTION CONTROL AGENCY (MPCA) DISPOSAL REQUIREMENTS.

HAZARDOUS MATERIALS: OIL, GASOLINE, PAINT AND ANY HAZARDOUS SUBSTANCES MUST BE PROPERLY STORED, INCLUDING SECONDARY CONTAINMENT, TO PREVENT SPILLS, LEAKS OR OTHER DISCHARGE. RESTRICTED ACCESS TO STORAGE AREAS MUST BE PROVIDED TO PREVENT VANDALISM. STORAGE AND DISPOSAL OF HAZARDOUS WASTE MUST BE IN COMPLIANCE WITH MPCA REGULATIONS.

EXTERNAL WASHING OF TRUCKS AND OTHER CONSTRUCTION VEHICLES MUST BE LIMITED TO A DEFINED AREA OF THE SITE. RUNOFF MUST BE CONTAINED AND WASTEWATER PROPERLY DISPOSED OF. NO ENGINE DEGREASING IS ALLOWED ON SITE.

CONCRETE WASHOUT: ALL LIQUID AND SOLID WASTES GENERATED BY CONCRETE WASHOUT OPERATIONS MUST BE CONTAINED IN A LEAK PROOF CONTAINMENT FACILITY OR IMPERMEABLE LINER. A COMPACTED CLAY LINER THAT DOES NOT ALLOW WASHOUT LIQUIDS TO ENTER THE GROUND IS CONSIDERED AN IMPERMEABLE LINER. THE LIQUID AND SOLID WASTES MUST NOT CONTACT THE GROUND, AND THERE MUST NOT BE RUNOFF FROM THE CONCRETE WASHOUT OPERATIONS OR AREAS. LIQUID AND SOLID WASTES MUST BE DISPOSED OF PROPERLY AND IN COMPLIANCE WITH MPCA REGULATIONS. A SIGN MUST BE INSTALLED ADJACENT TO EACH WASHOUT FACILITY TO INFORM CONCRETE EQUIPMENT OPERATORS TO UTILIZE THE PROPER FACILITIES. CONCRETE WASHOUT MAY ALSO OCCUR OFF SITE ACCORDING TO THE APPROPRIATE REGULATIONS.

FUELING OPERATION PLAN: ALL FUELING SHALL TAKE PLACE AT THE DESIGNATED FUELING LOCATION AND ACCORDING TO BEST PRACTICES FOR SITE FUELING OPERATIONS AS TO MINIMIZE THE POTENTIAL FOR SPILLS.

SPILL PREVENTION PLAN: ALL SPILLS SHALL BE IMMEDIATELY CLEANED UP AFTER DISCOVERY. THE SITE SUPERINTENDENT, WHO IS RESPONSIBLE FOR DAY-TO-DAY ONSITE CONSTRUCTION OPERATIONS WILL BE THE SPILL PREVENTION COORDINATOR AND WILL BE RESPONSIBLE FOR IMPLEMENTING CLEAN UP PROCEDURES, POSTING CLEAN UP RECOMMENDATIONS, AND ENSURING PROPER CLEAN UP TRAINING OF APPROPRIATE PERSONNEL.

SANITARY AND SEPTIC WASTE: SANITARY/SEPTIC FACILITIES SHALL BE PROVIDED AND MAINTAINED IN A NEAT AND SANITARY CONDITION. FOR THE USE OF THE CONTRACTOR'S EMPLOYEES. A LICENSED SANITARY WASTE MANAGEMENT CONTRACTOR AS REQUIRED BY STATE REGULATIONS WILL COLLECT SANITARY WASTE FROM PORTABLE UNITS.

FINAL STABILIZATION (PART IV.G):

THE CONTRACTOR MUST ENSURE FINAL STABILIZATION OF THE SITE ACCORDING THE DEFINITIONS IN THE NPDES GENERAL PERMIT PART IV SECTION G. THE CONTRACTOR MUST SUBMIT A NOTICE OF TERMINATION (N.O.T.) WITHIN 30 DAYS AFTER FINAL STABILIZATION IS COMPLETE OR WITHIN 7 DAYS AFTER SELLING THE SITE OR PORTION OF THE SITE (THAT HAS NOT UNDERGONE FINAL STABILIZATION) TO ANOTHER PARTY. A COPY OF THIS NOTICE OF TERMINATION / PERMIT MODIFICATION FORM MUST GO TO THE NEW OWNER. THE ORIGINAL CURRENT OWNER MUST PROVIDE A SWPPP TO THE NEW OWNER THAT SPECIFICALLY ADDRESSES THE REMAINING CONSTRUCTION ACTIVITY. SEE THE SWPPP PLAN SHEETS AND SWPPP NARRATIVE (ATTACHMENT A: CONSTRUCTION SWPPP TEMPLATE) AND SWPPP PLAN SHEETS FOR FINAL STABILIZATION MEASURES

TRAINING (PART III.A.2)

DESIGN ENGINEER: MATTHEW R. PAVEK P.E.
TRAINING COURSE: DESIGN OF SWPPP
TRAINING ENTITY: UNIVERSITY OF MINNESOTA
INSTRUCTOR: JOHN CHAPMAN
DATES OF TRAINING COURSE: 5/15/2011 - 5/16/2011
TOTAL TRAINING HOURS: 12
RE-CERTIFICATION: 1/13/14-1/13/14 (8 HOURS), EXP. 5/31/2017

OWNER INFORMATION

OWNER:
JAVA PROPERTIES
333 WASHINGTON AVENUE NORTH, SUITE 401
MINNEAPOLIS, MN 55401

CONTACT:
JAVA PROPERTIES
333 WASHINGTON AVENUE NORTH, SUITE 401
MINNEAPOLIS, MN 55401

AREAS AND QUANTITIES (PART III.A.4.B&C):

	EXISTING		PROPOSED	
BUILDING COVERAGE	1,958 SF	14.1%	5,050 SF	36.4%
ALL PAVEMENTS	11,409 SF	82.3%	7,021 SF	50.6%
ALL NON-PAVEMENTS	500 SF	3.6%	1,796 SF	13.0%
TOTAL SITE AREA	13,867 SF	100.0%	13,867 SF	100.0%
IMPERVIOUS SURFACE				
EXISTING CONDITION	13,367 SF	96.4%		
PROPOSED CONDITION	12,071 SF	87.0%		
DIFFERENCE	-1,296 SF	-9.3%		
DISTURBED AREA	21,500 SF			
SILT FENCE/BIO-ROLL	800 LF			
EROSION CONTROL BLANKET	0 SF			
INLET PROTECTION DEVICES	3 EA			

NOTE: QUANTITIES ARE FOR INFORMATIONAL PURPOSES ONLY. CONTRACTOR SHALL DETERMINE FOR THEMSELVES THE EXACT QUANTITIES FOR BIDDING AND CONSTRUCTION.

SWPPP CONTACT PERSON

CONTRACTOR:

SWPPP INSPECTOR TRAINING:
ALL SWPPP INSPECTIONS MUST BE PERFORMED BY A PERSON THAT MEETS THE TRAINING REQUIREMENTS OF THE NPDES CONSTRUCTION SITE PERMIT.
TRAINING CREDENTIALS SHALL BE PROVIDED BY THE CONTRACTOR AND KEPT ON SITE WITH THE SWPPP

PARTY RESPONSIBLE FOR LONG TERM OPERATION AND MAINTENANCE OF PERMANENT STORM WATER MANAGEMENT SYSTEM

PERMANENT STORMWATER MANAGEMENT IS NOT REQUIRED AS PART OF THIS PROJECT TO MEET NPDES PERMIT REQUIREMENTS. THE PROPERTY OWNER IS RESPONSIBLE FOR THE LONG TERM OPERATION AND MAINTENANCE OF THE PROPOSED STORMWATER SYSTEM.

SWPPP ATTACHMENTS:

NOT APPLICABLE

SUPPLEMENTARY SITE SPECIFIC EROSION CONTROL NOTES:

THESE NOTES SUPERCEDE ANY GENERAL SWPPP NOTES.

THIS PROJECT IS LESS THAN 1.0 ACRES, SO AN NPDES PERMIT IS NOT REQUIRED AND DOES NOT NEED TO BE SUBMITTED TO THE MPCA, HOWEVER, THE CONTRACTOR IS REQUIRED TO FOLLOW THE GUIDELINES IN THE NPDES PERMIT THROUGHOUT CONSTRUCTION.

PROJECT NARRATIVE:

PROJECT IS A REDEVELOPMENT OF AN EXISTING BUILDING SITE INTO A MULTI TENANT COMMERCIAL BUILDING. SITE AND LANDSCAPE IMPROVEMENTS WILL OCCUR.

SPECIAL TMDL BMP REQUIREMENTS SITE SPECIFIC (IF REQUIRED):

NOT REQUIRED

PERMANENT STABILIZATION NOTES SITE SPECIFIC:

PERMANENT SEED MIX
- FOR THIS PROJECT ALL AREAS THAT ARE NOT TO BE SODDED OR LANDSCAPED SHALL RECEIVE A NATIVE PERMANENT SEED MIX.
  - AREAS IN BUFFERS AND ADJACENT TO OR IN WET AREAS MNDOT SEED MIX 33-261 (STORMWATER SOUTH AND WEST) AT 35 LBS PER ACRE.
  - DRY AREAS MNDOT SEED MIX 35-221 (DRY PRAIRIE GENERAL) AT 40 LBS PER ACRE.
- MAINTENANCE SHALL BE IN ACCORDANCE TO THE MNDOT SEEDING MANUAL.

CITY OF MINNEAPOLIS EROSION CONTROL NOTES:

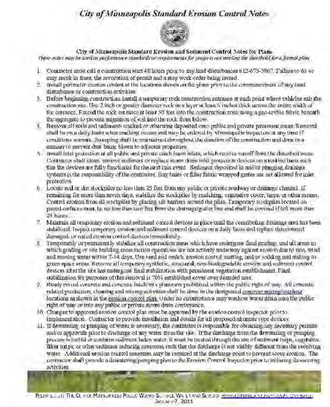
City of Minneapolis Standard Erosion Control Notes

City of Minneapolis Standard Erosion and Sediment Control Notes for Plans
These notes may be used as performance standards or requirements for projects not meeting the threshold for a formal plan.

1. Construct silt fence in construction start-of-work prior to any land disturbance (612-673-3767). Failure to do so may result in fines, the revocation of permits and a stop work order being issued.
2. Install perimeter erosion control at the locations shown on this plan prior to the commencement of any land disturbance or construction activities.
3. Define beginning construction, install a temporary rock construction entrance at each point where vehicles exit the construction site. The 2 inch or greater diameter rock must be at least 6 inches thick across the entire width of the entrance. Extend the rock entrance at least 50 feet into the construction zone using a geo-textile fabric beneath the aggregate to prevent migration of soil into the rock from below.
4. Remove all mud and sediment tracked or otherwise deposited onto public and private pavement/curb. Removal shall be on a daily basis when tracking occurs and may be ordered by Minneapolis inspectors at any time if conditions warrant. Sweeping shall be minimized throughout the duration of the construction and done in a manner to prevent dust being blown to adjacent properties.
5. Install inlet protection at all public and private catch basin inlets, which receive runoff from the disturbed areas. Contractor shall clean, remove sediment or replace more often with inspection deviation as need basis and/or when the devices are fully functional for the catch basin at hand. Sediment deposited in and/or clogging drainage systems is the responsibility of the contractor. Hay bales or filter fabric wrapped gutter are not allowed for inlet protection.
6. Locate soil or dirt stockpiles no less than 25 feet from any public or private roadway or drainage channel. If remaining for more than seven days, stabilize the stockpiles by mulching, vegetative cover, tarps or other means. Control erosion from all stockpiles by placing silt barriers around the piles. Temporary stockpiles located on paved surfaces must be no less than four feet from the drainageline/ line and shall be covered if left more than 24 hours.
7. Maintain all temporary erosion and sediment control devices in place until the contributing drainage area has been stabilized. Inspect temporary erosion and sediment control devices on a daily basis and replace/ maintenance/ damaged/ or install erosion control devices immediately.
8. Temporarily or permanently stabilize all construction areas which have undergone final grading; and all areas on which grading or site building construction operations are not actively underway against erosion due to rain, wind and moving water within 7-14 days. Use sand and mulch, erosion control matting, and/or sodding and mulching in green space areas. Remove all temporary synthetic, structural, non-biodegradable erosion and sediment control devices after the site has undergone final stabilization with permanent vegetation establishment. Final stabilization for purposes of this document is 70% established across area disturbed land.
9. Already placed concrete and concrete buckets/ placement prohibited within the public right of way. All concrete related production, cleaning and washout activities shall be done in the designated concrete washout/washed locations as shown in the erosion control plan. Under no circumstance may washout water drain into the public right of way or into any public or private storm drain/ conveyance.
10. Changes to approved erosion control plan must be approved by the erosion control inspector prior to implementation. Contractor is responsible installation and maintenance of all proposed erosion control devices.
11. If dewatering or pumping of water is necessary, the contractor is responsible for obtaining any necessary permits and/or approvals prior to discharge of any water from the site. If the discharge from the dewatering or pumping process consists of sediment laden water, it must be treated through the use of sedimentation traps, vegetation filter strips or other sediment reducing processes such that the discharge is not visibly different than the receiving water. Additional erosion control measures may be required at the discharge point to prevent scour erosion. The contractor shall provide a dewatering/pumping plan to the Erosion Control Inspector prior to initiating dewatering activities.

Please refer to the City of Minneapolis Public Works Sewer and Water Design Standards for more information and specifications. Revised on 07/1/2013.

CivilSite GROUP
4931 W. 35TH ST. SUITE 200
ST. LOUIS PARK, MN 55416
CivilSiteGroup.com
Matt Pavek 763-213-3944
Pat Sarver 952-250-2003

PROJECT
420 EAST HENNEPIN
420 East Hennepin, Minneapolis, MN
420 Hennepin Ave E LLC
333 Washington Avenue North, Suite 401, Minneapolis, MN

I HEREBY CERTIFY THAT THIS PLAN, SPECIFICATION, OR REPORT WAS PREPARED BY ME OR UNDER MY DIRECT SUPERVISION AND THAT I AM A DULY LICENSED PROFESSIONAL ENGINEER UNDER THE LAWS OF THE STATE OF MINNESOTA.

Matthew R. Pavek
DATE 2/23/15 LICENSE NO. 44263

ISSUE/SUBMITTAL SUMMARY

DATE	DESCRIPTION
1/30/15	MODIFIED PDR SUBMITTAL
2/23/15	CITY SUBMITTAL

REVISION SUMMARY

DATE	DESCRIPTION

SWPPP - NARRATIVE

SW1.3

EXTERIOR MATERIAL SCHEDULE

- A — BRICK
- B — BRICK/STONE
- C — BRICK/STONE
- D — METAL RAIL FEATURE
- E — PREFINISHED METAL COPING
- F — METAL CANOPY
- G — SIGNAGE AREA
- H — CAST CAP

EXTERIOR FINISHES

BRICK

BRICK

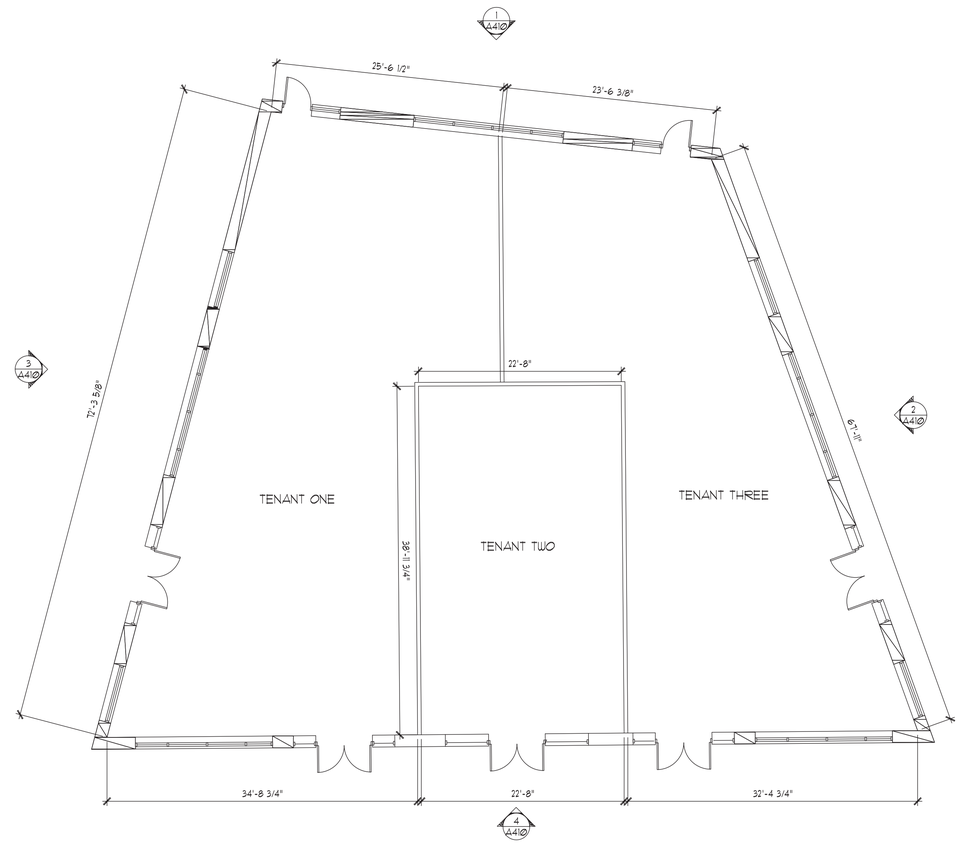

4 A210 SOUTH CONSTRUCTION ELEVATION
1/8"=1'-0"

5 A210 420 HENNEPIN CONSTRUCTION PLAN
1/8"=1'-0"

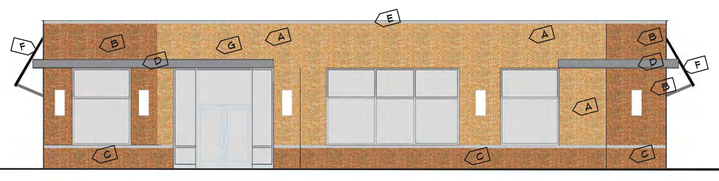

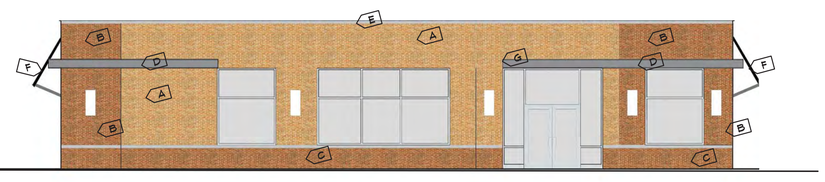

3 A210 EAST CONSTRUCTION ELEVATION
1/8"=1'-0"

2 A210 WEST CONSTRUCTION ELEVATION
1/8"=1'-0"

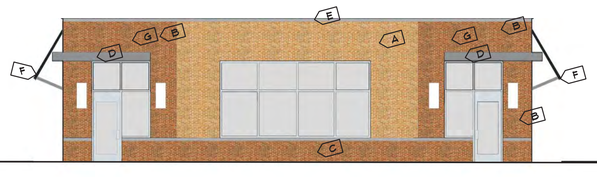

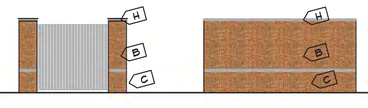

1 A210 NORTH CONSTRUCTION ELEVATION
1/8"=1'-0"

1 A210 TRASH ENCLOSURE-FRONT AND SIDE
1/8"=1'-0"

tanek

118 E. 26th Street
Suite 300
Minneapolis, MN 55404
P:612-879-8225
F:612-879-8152

www.tanek.com

project

420 East Hennepin

Minneapolis, MN

NOT FOR CONSTRUCTION

I hereby certify that this plan, specification or report was prepared by me or under my direct supervision and that I am a duly licensed architect under the laws of the state of Minnesota.

Nathaniel Sheg 04.10.2012
name date

24515
license number signature

scale 1/8" = 1'-0"
name nws

construction elevations

a210

copyright Tanek 2015

World • United States • MN • Hennepin Co. • Minneapolis • University
project site
NE Central Ave
SE 5th St
SE 4th St
NE 4th St
52
65
50 feet
20 m

420 East Hennepin view west

420 East Hennepin view west and south

420 East Hennepin view south

420 East Hennepin view east

420 East Hennepin view south and east