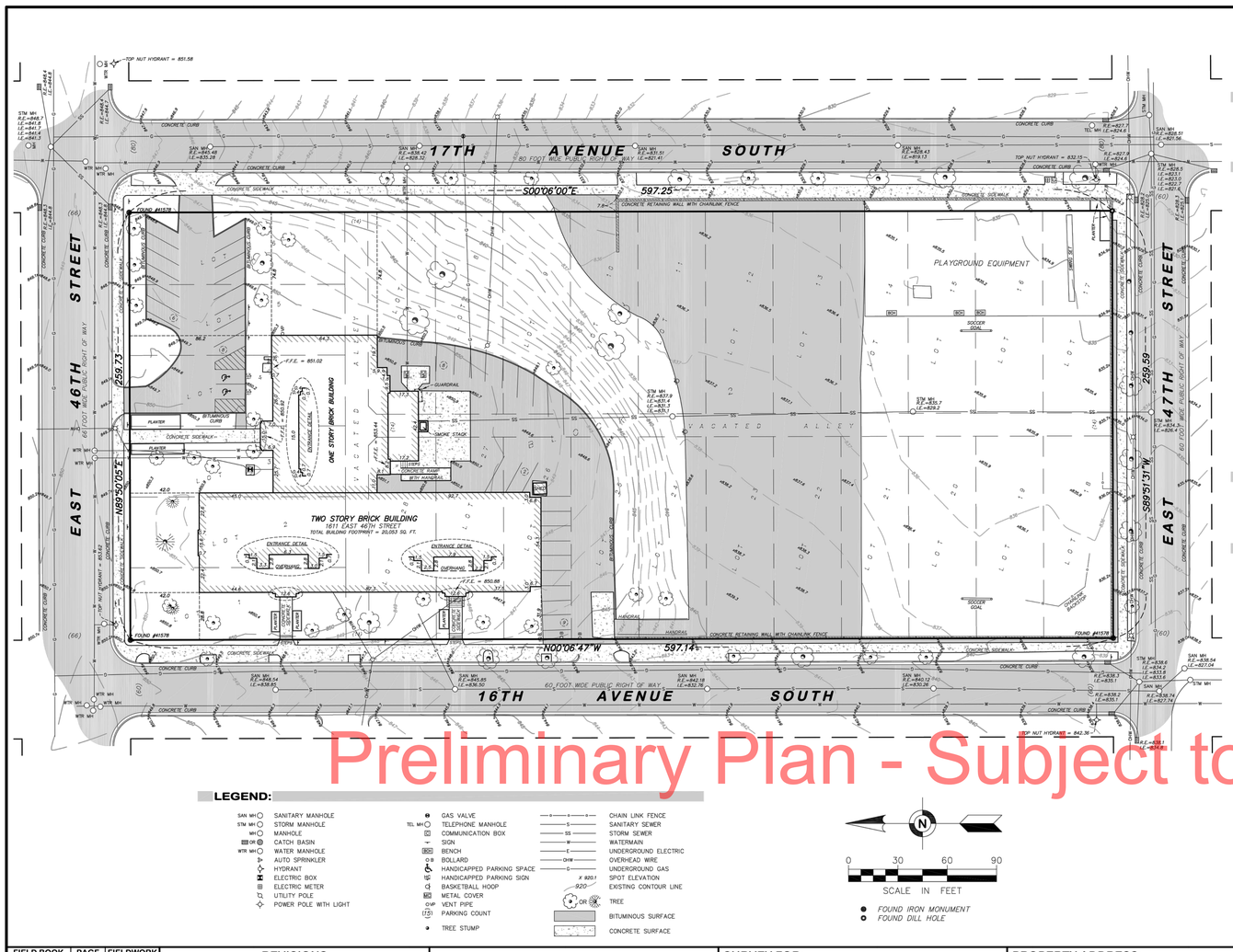

Preliminary Plan - Subject to change

LEGEND:

- SAN MH — SANITARY MANHOLE
- STM MH — STORM MANHOLE
- MH — MANHOLE
- CB / CBOR — CATCH BASIN
- WTR MH — WATER MANHOLE
- AUTO SPRINKLER
- HYDRANT
- ELECTRIC BOX
- ELECTRIC METER
- UTILITY POLE
- POWER POLE WITH LIGHT
- GAS VALVE
- TEL MH — TELEPHONE MANHOLE
- COMMUNICATION BOX
- SIGN
- BENCH
- BOLLARD
- HANDICAPPED PARKING SPACE
- HANDICAPPED PARKING SIGN
- BASKETBALL HOOP
- METAL COVER
- OVP — VENT PIPE
- PARKING COUNT
- TREE STUMP
- CHAIN LINK FENCE
- SANITARY SEWER
- STORM SEWER
- WATERMAIN
- UNDERGROUND ELECTRIC
- OVERHEAD WIRE
- UNDERGROUND GAS
- SPOT ELEVATION
- EXISTING CONTOUR LINE
- TREE
- BITUMINOUS SURFACE
- CONCRETE SURFACE

0 30 60 90
SCALE IN FEET

- FOUND IRON MONUMENT
- FOUND DILL HOLE

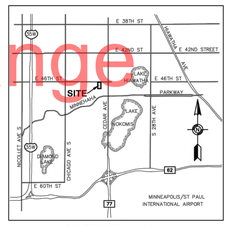

VICINITY MAP
NOT TO SCALE

ALTA/ACSM LAND TITLE SURVEY FOR: Community Planning & Economic Development

LEGAL DESCRIPTION:

All of Block 2, Harriet – Minnehaha Parkway Addition to Minneapolis together with the vacated alley which accrued thereto by reason of the vacation thereof, Hennepin County, Minnesota.

(Abstract Property)

NOTES:

1. The orientation of this bearing system is based on the Hennepin County coordinate grid (NAD 83–96 Adj.).
2. The total area of the property described hereon is 155,071 square feet or 3.5599 acres.
3. The legal description and easement information used in the preparation of this survey is based on the Commitment for Title Insurance prepared by Old Republic National Title Insurance Company, Commitment No. 58432 dated February 21, 2013 at 7:00 am.
4. Existing utilities, services and underground structures shown hereon were located either physically, from existing records made available to us, by resident testimony, or by locations provided by Gopher State One Call, per Ticket No. 130950514. However, locking excavation, the exact location of underground features cannot be accurately, completely and reliably depicted. Where additional or more detailed information is required, the client is advised that excavation may be necessary. Other utilities and services may be present and verification and location of all utilities and services should be obtained from the owners of the respective utilities prior to any design, planning or excavation.
5. No zoning report or letter was received from the insurer pursuant to Optional Table A Item 6(a) & 6(b) of Table A, as set forth in the 2011 Minimum Standard Detail Requirements for ALTA/ACSM Land Title Surveys.
6. The property described hereon lies within Flood Zone X (areas determined to be outside the 0.2% annual chance flood plain) per Federal Insurance Rate Map No. 27053 C 0367 E & 27053 C 0386 E, dated September 2, 2004.
7. BENCHMARK: Top of City of Minneapolis Control Monument "215" at the Intersection of 46th Street East and Cedar Avenue South.
   Elevation = 841.47 feet. (City of Minneapolis Datum – NGVD 29)
8. As of the date of this survey the property described hereon contains a total of 35 parking spaces of which 33 are standard spaces and 2 handicapped spaces.
9. As of the date of this survey there is no observable evidence of current earth moving work, building construction or building additions on the property described hereon.
10. As of the date of this survey and according to the City of Minneapolis Engineering Department there are no completed or proposed changes in street right-of-way lines. As of the date of this survey there is no observable evidence of recent street or sidewalk construction or repairs that affect the property described hereon.
11. As of the date of this survey there is no observable evidence that the property described hereon is being used as a solid waste dump, sump or sanitary landfill.

SURVEY ITEMS PER SCHEDULE B:

There are no pertinent items listed in the Commitment for Title Insurance prepared by Old Republic National Title Insurance Company, Commitment No. 58432 Schedule B II to be listed on survey.

CERTIFICATION:

To: The Department of Community Planning & Economic Development of the City of Minneapolis, Special School District No. 1, CSDC Property Corporation, an Arizona 501(c)(4) nonprofit corporation, Old Republic National Title Insurance Company:

This is to certify that this map or plat and the survey on which it is based were made in accordance with the 2011 Minimum Standard Detail Requirements for ALTA/ACSM Land Title Surveys, jointly established and adopted by ALTA and NSPS, and includes items 1, 2, 3, 4, 5, 6(a), 7(a), 7(b)(1), 8, 9, 11(b), 13, 16, 17 & 18 of Table A thereof. The field work was completed on April 16, 2013.

Date of Plot or Map: April 22, 2013

Brent R Peters
Minnesota License No. 44123

FIELD BOOK	PAGE
2590	56

DRAWING NAME: 35525.dwg
JOB NO. 35525
FILE NO. 3212

FIELDWORK CHIEF: SW
DRAWN BY: PMD
CHECKED BY: BRP

REVISIONS		
NO.	DATE	DESCRIPTION

ALTA/ACSM LAND TITLE SURVEY

SURVEY FOR: Community Planning & Economic Development

PROPERTY ADDRESS: 1611 46th Street East Minneapolis, Minnesota 55407

Egan, Field & Nowak, Inc.
land surveyors since 1872
1229 Tyler Street NE, Suite 100
Minneapolis, Minnesota 55413
PHONE: (612) 466-3300
FAX: (612) 466-3383
WWW.EFNSURVEY.COM
COPYRIGHT © 2013 By EGAN, FIELD & NOWAK, INC.

SHEET 1 OF 1

Printed 4/22/2013 at 10:17 AM by Brent Peters

SURVEY PROVIDED BY EGAN, FIELD & NOWAK, INC. DATED APRIL 22, 2013

WARNING:

THE CONTRACTOR SHALL BE RESPONSIBLE FOR CALLING FOR LOCATIONS OF ALL EXISTING UTILITIES. THEY SHALL COOPERATE WITH ALL UTILITY COMPANIES IN MAINTAINING THEIR SERVICE AND / OR RELOCATION OF LINES.

THE CONTRACTOR SHALL CONTACT GOPHER STATE ONE CALL AT 651-454-0002 AT LEAST 48 HOURS IN ADVANCE FOR THE LOCATIONS OF ALL UNDERGROUND WIRES, CABLES, CONDUITS, PIPES, MANHOLES, VALVES OR OTHER BURIED STRUCTURES BEFORE DIGGING. THE CONTRACTOR SHALL REPAIR OR REPLACE THE ABOVE WHEN DAMAGED DURING CONSTRUCTION AT NO COST TO THE OWNER.

U+B architecture & design, inc.
2609 Aldrich Avenue South
Suite 100
Minneapolis, Minnesota 55408
T | 612-870-2538
www.uplusb.com

Project Contacts

Mark Burgess, AIA
P | 612-870-2538
mark.burgess@uplusb.com

Dan Peterson
P | 612-870-2538
dan.peterson@uplusb.com

LOUCKS ASSOCIATES
Planning • Civil Engineering • Land Surveying
Landscape Architecture • Environmental
7200 Hemlock Lane - Suite 300
Minneapolis, Minnesota 55369
Telephone: (763)424-5505
Fax: (763)424-5822
www.louckasociates.com
©2012

Design Development
October 1, 2013

Northrop School
1611 46th Street East
Minneapolis, MN 55407

FOR

Charter Schools Development Corporation
7272 Park Circle Drive, Suite 265
Hanover, MD 21076

ON BEHALF OF

Hiawatha Leadership Academy
4537 3rd Avenue South
Minneapolis, MN 55417

Project 2012019NRTP

Drawings Issued	Date
DD Plans	Oct 4, 2013
Land Use Application	Oct 16, 2013
City Comments	Nov 4, 2013

I hereby certify that this plan, specification or report was prepared by me or under my direct supervision and that I am a duly Licensed Professional Engineer under the laws of the State of Minnesota

Signature
Printed Name Michael J. St. Martin, PE
Registration Number 24440

EXISTING CONDITIONS PLAN

C1-1

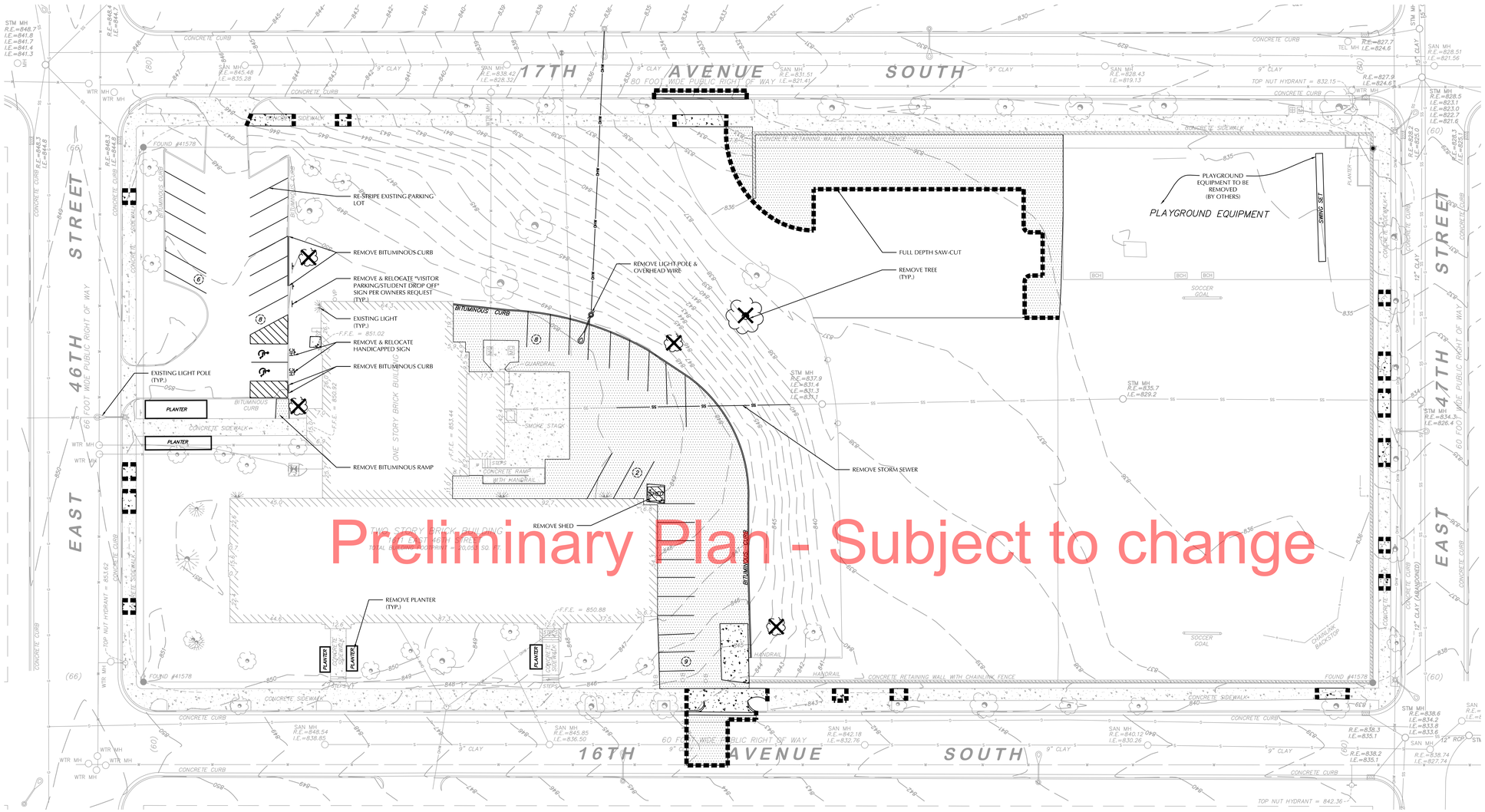

Preliminary Plan - Subject to change

SITE DEMOLITION NOTES

1. THE CONTRACTOR SHALL TAKE ALL PRECAUTIONS NECESSARY TO AVOID PROPERTY DAMAGE TO ADJACENT PROPERTIES DURING THE CONSTRUCTION PHASE OF THIS PROJECT. THE CONTRACTOR WILL BE HELD RESPONSIBLE FOR ANY DAMAGES TO ADJACENT PROPERTIES OCCURRING DURING THE CONSTRUCTION PHASE OF THIS PROJECT.

2. THE CONTRACTOR WILL BE RESPONSIBLE FOR PROVIDING AND MAINTAINING TRAFFIC CONTROL DEVICES SUCH AS BARRICADES, WARNING SIGNS, DIRECTIONAL SIGNS, FLAGMEN AND LIGHTS TO CONTROL THE MOVEMENT OF TRAFFIC WHERE NECESSARY. PLACEMENT OF THESE DEVICES SHALL BE APPROVED BY THE ENGINEER PRIOR TO PLACEMENT. TRAFFIC CONTROL DEVICES SHALL CONFORM TO THE APPROPRIATE MINNESOTA DEPARTMENT OF TRANSPORTATION STANDARDS.

3. IN ACCORDANCE WITH GENERALLY ACCEPTED CONSTRUCTION PRACTICES, THE CONTRACTOR WILL BE SOLELY AND COMPLETELY RESPONSIBLE FOR CONDITIONS ON THE JOB SITE, INCLUDING SAFETY OF ALL PERSONS AND PROPERTY DURING THE PERFORMANCE OF THE WORK. THIS REQUIREMENT WILL APPLY CONTINUOUSLY AND NOT BE LIMITED TO NORMAL WORKING HOURS.

4. THE DUTY OF THE ENGINEER OR THE DEVELOPER TO CONDUCT CONSTRUCTION REVIEW OF THE CONTRACTORS PERFORMANCE IS NOT INTENDED TO INCLUDE REVIEW OF THE ADEQUACY OF THE CONTRACTORS SAFETY MEASURES IN, OR NEAR THE CONSTRUCTION SITE.

5. BEFORE BEGINNING CONSTRUCTION THE CONTRACTOR SHALL INSTALL A TEMPORARY ROCK ENTRANCE PAD AT ALL POINTS OF VEHICLE EXIT FROM THE PROJECT SITE. SAID ROCK ENTRANCE PAD SHALL BE MAINTAINED BY THE CONTRACTOR FOR THE DURATION OF THE PROJECT. SEE DETAIL SHEET(S).

6. EROSION AND SEDIMENTATION CONTROL MEASURES SHALL BE ESTABLISHED AROUND THE ENTIRE SITE PERIMETER AND IN ACCORDANCE WITH NPDES PERMIT REQUIREMENTS, BEST MANAGEMENT PRACTICES, CITY REQUIREMENTS AND THE DETAILS SHOWN ON THE DETAIL SHEET(S) OF THE PROJECT PLANS.

7. DEMOLITION AND UTILITY WORK MAY REQUIRE CITY PERMITS.

8. CONTRACTOR TO CLEAR AND GRUB EXISTING VEGETATION WITHIN CONSTRUCTION LIMITS, STRIP TOP SOIL, AND STOCKPILE ON-SITE. REFER TO GRADING PLAN AND SWPPP FOR SEDIMENT AND EROSION CONTROL REQUIREMENTS.

9. EXISTING TOPOGRAPHY PROVIDED BY OTHERS.

10. THE CONTRACTOR SHALL FIELD VERIFY LOCATIONS AND ELEVATIONS OF EXISTING UTILITIES AND TOPOGRAPHIC FEATURES PRIOR TO COMMENCEMENT OF CONSTRUCTION ACTIVITY. THE CONTRACTOR SHALL NOTIFY THE ENGINEER OF ANY DISCREPANCIES OR VARIATIONS FROM THE PLANS.

11. MINNESOTA STATE STATUTE REQUIRES NOTIFICATION PER "GOPHER STATE ONE CALL" PRIOR TO COMMENCING ANY GRADING, EXCAVATION OR UNDERGROUND WORK.

12. CLEAR AND GRUB AND REMOVE ALL TREES, VEGETATION AND SITE DEBRIS PRIOR TO GRADING. ALL REMOVED MATERIAL SHALL BE HAULED FROM THE SITE DAILY. ALL CLEARING AND GRUBBING AND REMOVALS SHALL BE PERFORMED PER THE CONTRACT SPECIFICATIONS. EROSION CONTROL MEASURES SHALL BE IMMEDIATELY ESTABLISHED UPON REMOVAL. SEE THE EROSION CONTROL PLAN.

13. CONTRACTOR SHALL PROTECT SURFACE AND SUBSURFACE FEATURES NOT NOTED FOR REMOVAL.

SITE DEMOLITION LEGEND

- CONSTRUCTION LIMITS
- REMOVE CONCRETE
- REMOVE BITUMINOUS
- SAWCUT PAVEMENT
- REMOVE TREE

NORTH

0 20 40
SCALE IN FEET

WARNING:

THE CONTRACTOR SHALL BE RESPONSIBLE FOR CALLING FOR LOCATIONS OF ALL EXISTING UTILITIES. THEY SHALL COOPERATE WITH ALL UTILITY COMPANIES IN MAINTAINING THEIR SERVICE AND / OR RELOCATION OF LINES.

THE CONTRACTOR SHALL CONTACT GOPHER STATE ONE CALL AT 651-454-0002 AT LEAST 48 HOURS IN ADVANCE FOR THE LOCATIONS OF ALL UNDERGROUND WIRES, CABLES, CONDUITS, PIPES, MANHOLES, VALVES OR OTHER BURIED STRUCTURES BEFORE DIGGING. THE CONTRACTOR SHALL REPAIR OR REPLACE THE ABOVE WHEN DAMAGED DURING CONSTRUCTION AT NO COST TO THE OWNER.

CALL BEFORE YOU DIG!
Gopher State One Call
TWIN CITY AREA: 651-454-0002
TOLL FREE: 1-800-252-1166

U+B architecture & design, inc.
2609 Aldrich Avenue South
Suite 100
Minneapolis, Minnesota 55408
T | 612-870-2538
www.uplusb.com

Project Contacts

Mark Burgess, AIA
P | 612-870-2538
mark.burgess@uplusb.com

Dan Peterson
P | 612-870-2538
dan.peterson@uplusb.com

LOUCKS ASSOCIATES
Planning • Civil Engineering • Land Surveying
Landscape Architecture • Environmental
7200 Hemlock Lane - Suite 300
Minneapolis, Minnesota 55369
Telephone: (763)424-5505
Fax: (763)424-5822
www.loucksassociates.com
©2012

Design Development
October 1, 2013

Northrop School
1611 46th Street East
Minneapolis, MN 55407

FOR

Charter Schools Development Corporation
7272 Park Circle Drive, Suite 265
Hanover, MD 21076

ON BEHALF OF

Hiawatha Leadership Academy
4537 3rd Avenue South
Minneapolis, MN 55417

Project 2012019NRTP

Drawings Issued	Date
DD Plans	Oct 4, 2013
Land Use Application	Oct 16, 2013
City Comments	Nov 4, 2013

I hereby certify that this plan, specification or report was prepared by me or under my direct supervision and that I am a duly Licensed Professional Engineer under the laws of the State of Minnesota

Signature

Printed Name Michael J. St. Martin, PE

Registration Number 24440

SITE DEMOLITION PLAN

C1-2

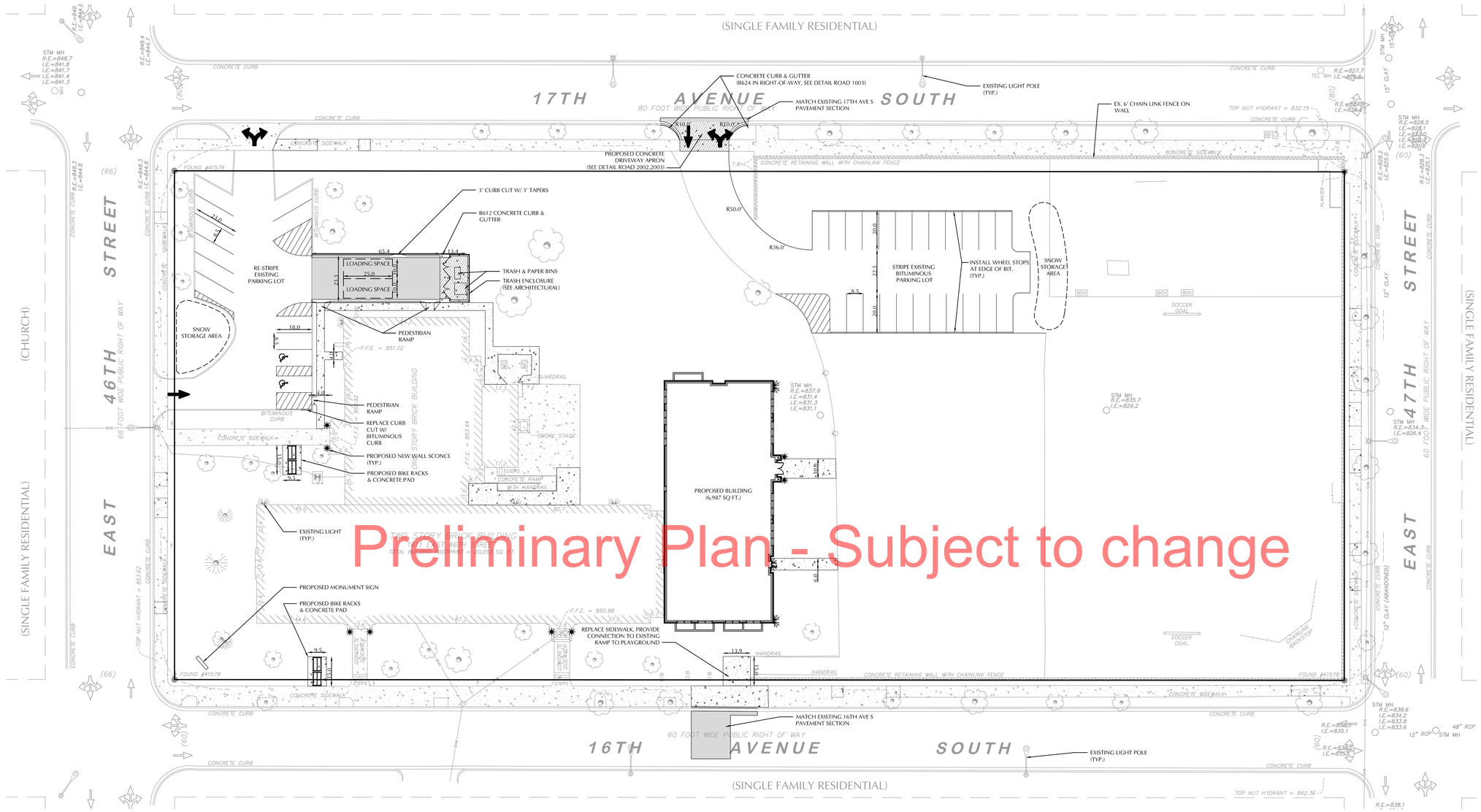

Preliminary Plan - Subject to change

SITE NOTES

1. MINNESOTA STATE STATUTE REQUIRES NOTIFICATION PER "GOPHER STATE ONE CALL" PRIOR TO COMMENCING ANY GRADING, EXCAVATION OR UNDERGROUND WORK.

2. CONTRACTOR SHALL FIELD VERIFY LOCATIONS AND ELEVATIONS OF EXISTING UTILITIES AND TOPOGRAPHIC FEATURES PRIOR TO COMMENCEMENT OF CONSTRUCTION ACTIVITY. THE CONTRACTOR SHALL NOTIFY THE ENGINEER OF ANY DISCREPANCIES OR VARIATIONS FROM THE PLANS.

3. ALL PAVING, CONCRETE CURB, GUTTER AND SIDEWALK SHALL BE FURNISHED AND INSTALLED IN ACCORDANCE WITH THE DETAILS SHOWN PER THE DETAIL SHEET(S) AND CITY STANDARDS.

4. MINNESOTA STATE STATUTE REQUIRES NOTIFICATION PER "GOPHER STATE ONE CALL" PRIOR TO COMMENCING ANY GRADING, EXCAVATION OR UNDERGROUND WORK.

5. A SIGNIFICANT PORTION OF SITE IMPROVEMENTS NOT SHOWN ON THIS SHEET ARE DESCRIBED AND PROVIDED IN FURTHER DETAIL ON THE ARCHITECTURAL AND LANDSCAPE PLANS.

6. ALL CURB DIMENSIONS SHOWN ARE TO THE FACE OF CURB UNLESS OTHERWISE NOTED.

7. ALL BUILDING DIMENSIONS ARE TO THE OUTSIDE FACE OF WALL UNLESS OTHERWISE NOTED.

8. BITUMINOUS IMPREGNATED FIBER BOARD TO BE PLACED AT FULL DEPTH OF CONCRETE ADJACENT TO EXISTING STRUCTURES AND BEHIND CURB ADJACENT TO DRIVEWAYS AND SIDEWALKS.

SITE DATA

TOTAL SITE AREA:	3.56 AC
EXISTING IMPERVIOUS AREA:	1.73 AC
PROPOSED IMPERVIOUS AREA:	1.64 AC
DISTURBED AREA:	0.95 AC

PAVEMENT TYPES

- BITUMINOUS PAVEMENT
- CONCRETE SIDEWALK
- CONCRETE PAVEMENT

NOTE:
SEE PAVEMENT SECTIONS ON SHEET C8-1 FOR TYPE AND DEPTH INFORMATION

NORTH

0 20 40
SCALE IN FEET

WARNING:

THE CONTRACTOR SHALL BE RESPONSIBLE FOR CALLING FOR LOCATIONS OF ALL EXISTING UTILITIES. THEY SHALL COOPERATE WITH ALL UTILITY COMPANIES IN MAINTAINING THEIR SERVICE AND / OR RELOCATION OF LINES.

THE CONTRACTOR SHALL CONTACT GOPHER STATE ONE CALL AT 651-454-0002 AT LEAST 48 HOURS IN ADVANCE FOR THE LOCATIONS OF ALL UNDERGROUND WIRES, CABLES, CONDUITS, PIPES, MANHOLES, VALVES OR OTHER BURIED STRUCTURES BEFORE DIGGING. THE CONTRACTOR SHALL REPAIR OR REPLACE THE ABOVE WHEN DAMAGED DURING CONSTRUCTION AT NO COST TO THE OWNER.

CALL BEFORE YOU DIG!
Gopher State One Call
TWIN CITY AREA: 651-454-0002
TOLL FREE: 1-800-252-1166

U+B architecture & design, inc.
2609 Aldrich Avenue South
Suite 100
Minneapolis, Minnesota 55408
T | 612-870-2538
www.uplusb.com

Project Contacts

Mark Burgess, AIA
P | 612-870-2538
mark.burgess@uplusb.com

Dan Peterson
P | 612-870-2538
dan.peterson@uplusb.com

LOUCKS ASSOCIATES
Planning • Civil Engineering • Land Surveying
Landscape Architecture • Environmental
7200 Hemlock Lane - Suite 300
Minneapolis, Minnesota 55369
Telephone: (763)424-5505
Fax: (763)424-5822
www.loucksassociates.com
©2012

Design Development
October 1, 2013

Northrop School
1611 46th Street East
Minneapolis, MN 55407

FOR

Charter Schools Development Corporation
7272 Park Circle Drive, Suite 265
Hanover, MD 21076

ON BEHALF OF

Hiawatha Leadership Academy
4537 3rd Avenue South
Minneapolis, MN 55417

Project 2012019NRTP

Drawings Issued	Date
DD Plans	Oct 4, 2013
Land Use Application	Oct 16, 2013
City Comments	Nov 4, 2013

I hereby certify that this plan, specification or report was prepared by me or under my direct supervision and that I am a duly Licensed Professional Engineer under the laws of the State of Minnesota.

Signature
Printed Name Michael J. St. Martin, PE
Registration Number 24440

SITE PLAN

C2-1

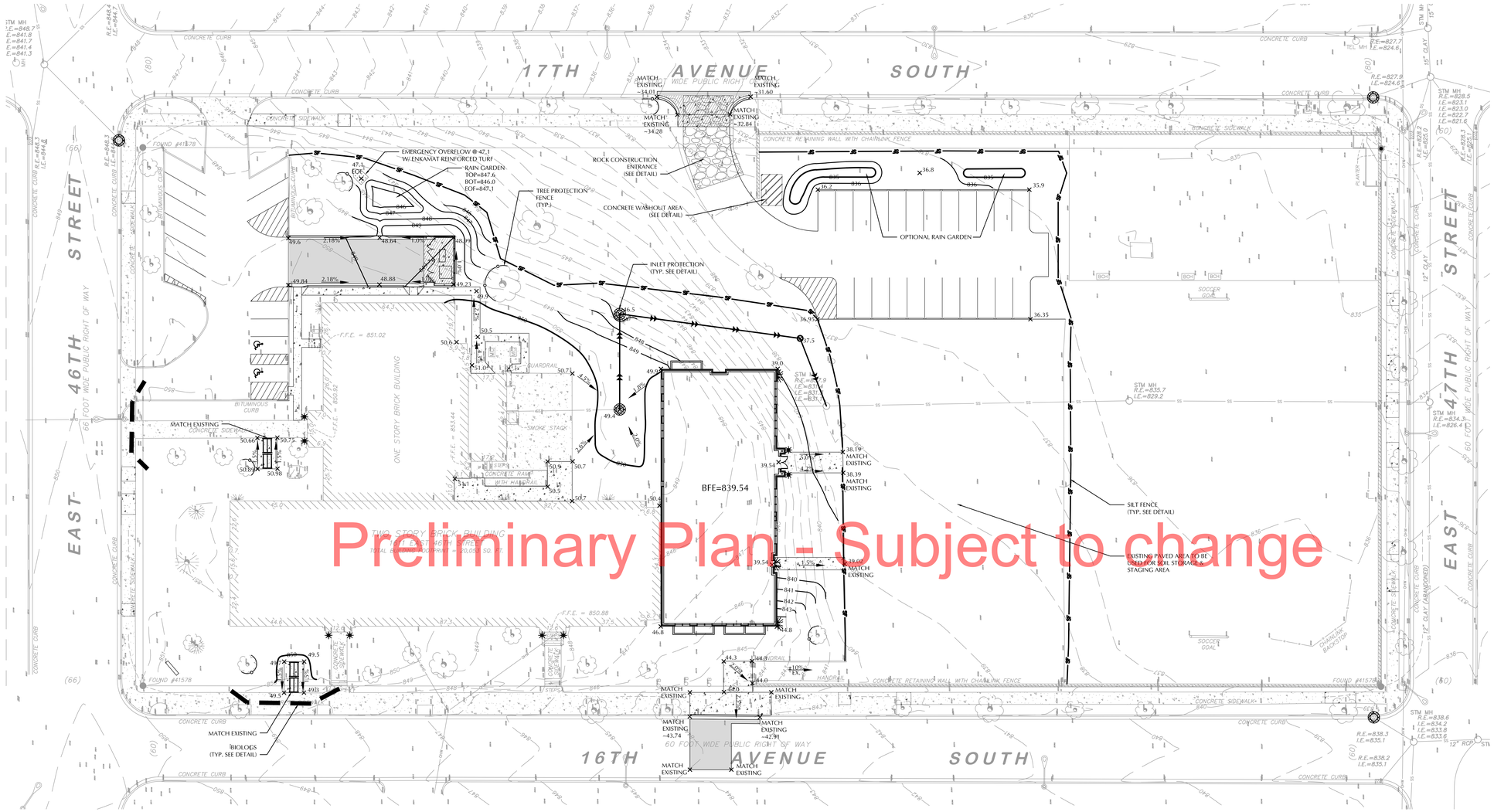

Preliminary Plan - Subject to change

GRADING, DRAINAGE & EROSION CONTROL NOTES

1. ALL DISTURBED UNPAVED AREAS ARE TO RECEIVE MINIMUM OF 4 INCHES OF TOP SOIL AND SOD OR SEED. THESE AREAS SHALL BE WATERED BY THE CONTRACTOR UNTIL THE SOD OR SEED IS GROWING IN A HEALTHY MANNER.
2. THE CONTRACTOR SHALL TAKE ALL PRECAUTIONS NECESSARY TO AVOID PROPERTY DAMAGE TO ADJACENT PROPERTIES DURING THE CONSTRUCTION PHASE OF THIS PROJECT. THE CONTRACTOR WILL BE HELD RESPONSIBLE FOR ANY DAMAGES TO ADJACENT PROPERTIES OCCURRING DURING THE CONSTRUCTION PHASE OF THIS PROJECT.
3. THE CONTRACTOR WILL BE RESPONSIBLE FOR PROVIDING AND MAINTAINING TRAFFIC CONTROL DEVICES SUCH AS BARRICADES, WARNING SIGNS, DIRECTIONAL SIGNS, FLAGMEN AND LIGHTS TO CONTROL THE MOVEMENT OF TRAFFIC WHERE NECESSARY. PLACEMENT OF THESE DEVICES SHALL BE APPROVED BY THE ENGINEER PRIOR TO PLACEMENT. TRAFFIC CONTROL DEVICES SHALL BE APPROVED BY THE ENGINEER PRIOR TO PLACEMENT. TRAFFIC CONTROL DEVICES SHALL CONFORM TO THE APPROPRIATE MINNESOTA DEPARTMENT OF TRANSPORTATION STANDARDS.
4. IN ACCORDANCE WITH GENERALLY ACCEPTED CONSTRUCTION PRACTICES, THE CONTRACTOR WILL BE SOLELY AND COMPLETELY RESPONSIBLE FOR CONDITIONS ON THE JOB SITE, INCLUDING SAFETY OF ALL PERSONS AND PROPERTY DURING THE PERFORMANCE OF THE WORK. THIS REQUIREMENT WILL APPLY CONTINUOUSLY AND NOT BE LIMITED TO NORMAL WORKING HOURS.
5. THE DUTY OF THE ENGINEER OF THE DEVELOPER TO CONDUCT CONSTRUCTION REVIEW OF THE CONTRACTORS PERFORMANCE IS NOT INTENDED TO INCLUDE REVIEW OF THE ADEQUACY OF THE CONTRACTORS SAFETY MEASURES IN, OR NEAR THE CONSTRUCTION SITE.
6. BEFORE BEGINNING CONSTRUCTION THE CONTRACTOR SHALL INSTALL A TEMPORARY ROCK ENTRANCE PAD AT ALL POINTS OF VEHICLE EXIT FROM THE PROJECT SITE. SAID ROCK ENTRANCE PAD SHALL BE MAINTAINED BY THE CONTRACTOR FOR THE DURATION OF THE PROJECT. SEE DETAILS SHOWN ON SHEET C3-2 FOR THE PROJECT PLANS
7. EROSION AND SEDIMENTATION CONTROL MEASURES SHALL BE ESTABLISHED AROUND THE ENTIRE SITE PERIMETER AND IN ACCORDANCE WITH NPDES PERMIT REQUIREMENTS, BEST MANAGEMENT PRACTICES, CITY REQUIREMENTS AND THE DETAILS SHOWN ON SHEET C3-1 OF THE PROJECT PLANS.
8. ALL ENTRANCES AND CONNECTIONS TO CITY STREET SHALL BE PERFORMED PER THE REQUIREMENTS OF THE CITY. THE CONTRACTOR SHALL BE RESPONSIBLE FOR ALL PERMITS AND NOTIFICATIONS AS REQUIRED BY THE CITY.
9. ADJACENT STREETS AND ALLEYS MUST BE SWEPT TO KEEP THEM FREE OF SEDIMENT. CONTRACTOR MUST MONITOR CONDITIONS AND SWEEP AS NEEDED OR WITHIN 24 HOURS OF NOTICE BY THE CITY.
10. STREETS MUST BE CLEANED AND SWEPT WHENEVER TRACKING OF SEDIMENTS OCCURS AND BEFORE SITES ARE LEFT IDLE FOR WEEKENDS AND HOLIDAYS. A REGULAR SWEEPING SCHEDULE MUST BE ESTABLISHED.
11. ADJUST ALL EXISTING STRUCTURES, BOTH PUBLIC AND PRIVATE TO THE PROPOSED GRADES WHERE DISTURBED AND COMPLY WITH ALL REQUIREMENTS OF THE UTILITY OWNERS. STRUCTURES BEING RESET TO PAVED AREAS MUST MEET OWNERS REQUIREMENTS FOR TRAFFIC
12. DUST MUST BE ADEQUATELY CONTROLLED.
13. SEE UTILITY PLAN FOR STORM SEWER INFORMATION.
14. EXISTING TOPOGRAPHY PROVIDED BY OTHERS.
15. SPOT ELEVATIONS REPRESENT FINISHED SURFACE GRADES AT GUTTER LINE, FACE OF BUILDING, OR EDGE OF PAVEMENT UNLESS OTHERWISE NOTED.
16. SEE SITE PLAN FOR CURB AND BITUMINOUS TAPER LOCATIONS.

NORTH

0 20 40
SCALE IN FEET

WARNING:

THE CONTRACTOR SHALL BE RESPONSIBLE FOR CALLING FOR LOCATIONS OF ALL EXISTING UTILITIES. THEY SHALL COOPERATE WITH ALL UTILITY COMPANIES IN MAINTAINING THEIR SERVICE AND / OR RELOCATION OF LINES.

THE CONTRACTOR SHALL CONTACT GOPHER STATE ONE CALL AT 651-454-0002 AT LEAST 48 HOURS IN ADVANCE FOR THE LOCATIONS OF ALL UNDERGROUND WIRES, CABLES, CONDUITS, PIPES, MANHOLES, VALVES OR OTHER BURIED STRUCTURES BEFORE DIGGING. THE CONTRACTOR SHALL REPAIR OR REPLACE THE ABOVE WHEN DAMAGED DURING CONSTRUCTION AT NO COST TO THE OWNER.

CALL BEFORE YOU DIG!
Gopher State One Call
TWIN CITY AREA: 651-454-0002
TOLL FREE: 1-800-252-1166

U+B architecture & design, inc.
2609 Aldrich Avenue South
Suite 100
Minneapolis, Minnesota 55408
T | 612-870-2538
www.uplusb.com

Project Contacts

Mark Burgess, AIA
P | 612-870-2538
mark.burgess@uplusb.com

Dan Peterson
P | 612-870-2538
dan.peterson@uplusb.com

LOUCKS ASSOCIATES
Planning • Civil Engineering • Land Surveying
Landscape Architecture • Environmental
7200 Hemlock Lane - Suite 300
Minneapolis, Minnesota 55369
Telephone: (763)424-5505
Fax: (763)424-5822
www.loucksassociates.com
©2012

Design Development
October 1, 2013

Northrop School
1611 46th Street East
Minneapolis, MN 55407

FOR

Charter Schools Development Corporation
7272 Park Circle Drive, Suite 265
Hanover, MD 21076

ON BEHALF OF

Hiawatha Leadership Academy
4537 3rd Avenue South
Minneapolis, MN 55417

Project 2012019NRTP

Drawings Issued	Date
DD Plans	Oct 4, 2013
Land Use Application	Oct 16, 2013
City Comments	Nov 4, 2013

I hereby certify that this plan, specification or report was prepared by me or under my direct supervision and that I am a duly Licensed Professional Engineer under the laws of the State of Minnesota

Signature

Printed Name Michael J. St. Martin, PE

Registration Number 24440

GRADING & EROSION CONTROL PLAN
C3-1

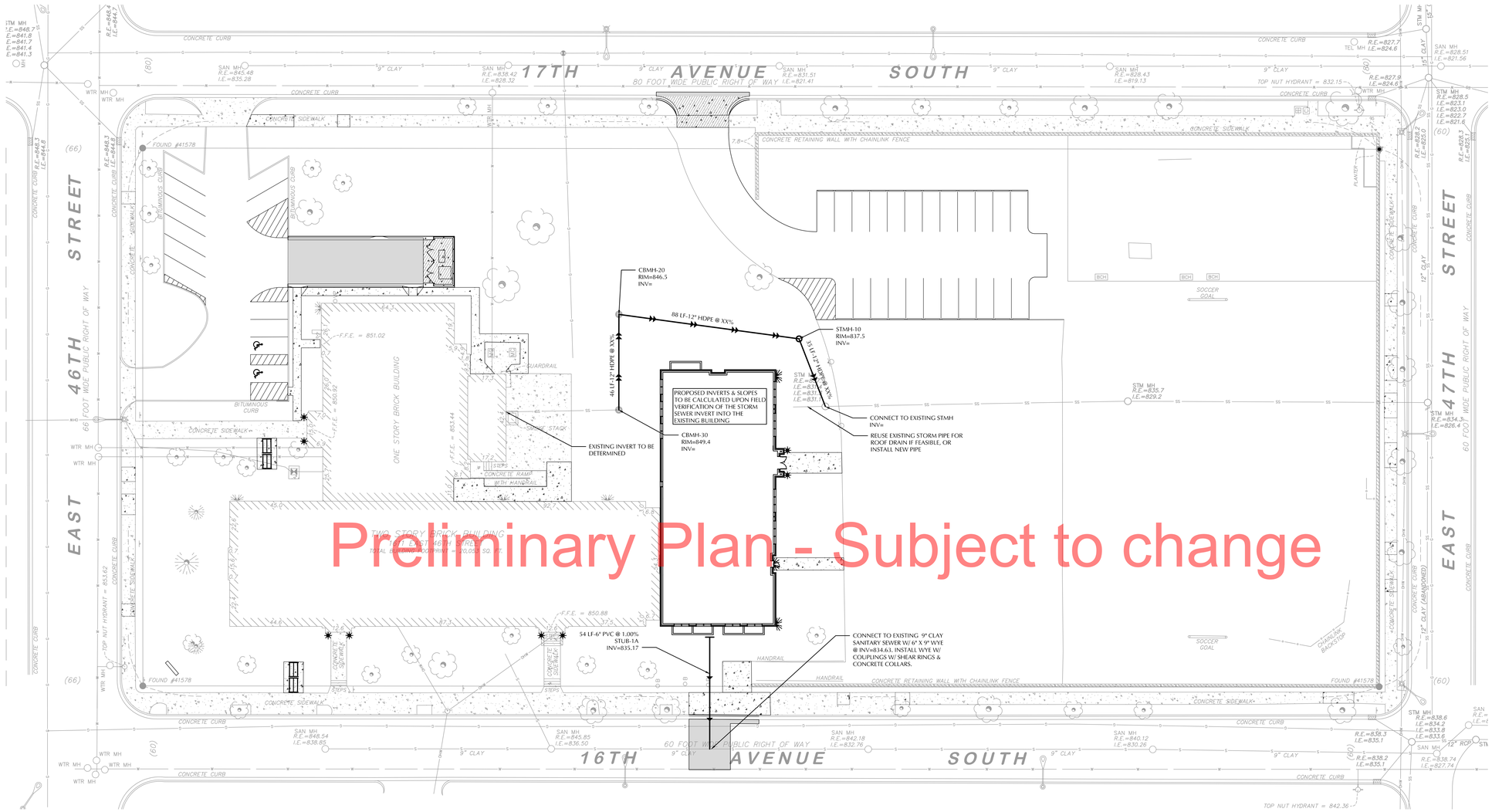

Preliminary Plan - Subject to change

CALL BEFORE YOU DIG!
Gopher State One Call
TWIN CITY AREA: 651-454-0002
TOLL FREE: 1-800-252-1166

UTILITY PLAN NOTES

1. ALL SANITARY SEWER, STORM SEWER AND WATERMAIN UTILITIES SHALL BE FURNISHED AND INSTALLED PER THE REQUIREMENTS OF THE SPECIFICATIONS, THE CITY AND THE STANDARD UTILITIES SPECIFICATION OF THE CITY ENGINEERS ASSOCIATION OF MINNESOTA (CEAM), 1999 EDITION.

2. SEE DETAIL SHEET AND THE CONTRACT SPECIFICATIONS FOR SPECIFIC UTILITY DETAILS.

3. ALL CONNECTIONS TO EXISTING UTILITIES SHALL BE PERFORMED PER THE REQUIREMENTS OF THE CITY, THE CITY DEPARTMENT OF ENGINEERING AND BUILDING INSPECTIONS DEPARTMENT AND THE CONSTRUCTION ENGINEER MUST BE NOTIFIED AT LEAST 48 HOURS PRIOR TO ANY WORK WITHIN THE PUBLIC RIGHT OF WAY, OR WORK IMPACTING PUBLIC UTILITIES.

4. THE CONTRACTOR SHALL NOTIFY GOPHER STATE ONE CALL AT 651-454-0002 AT LEAST 48 HOURS PRIOR TO PERFORMING ANY EXCAVATION OR UNDERGROUND WORK.

5. THE CONTRACTOR SHALL FIELD ADJUST WATERMAIN TO AVOID CONFLICTS WITH SANITARY SEWER, STORM SEWER, AND SERVICES AS REQUIRED.

6. ALL STREET REPAIRS AND PATCHING SHALL BE PERFORMED PER THE REQUIREMENTS OF THE CITY. ALL TRAFFIC CONTROL SHALL BE PROVIDED BY THE CONTRACTOR AND SHALL BE ESTABLISHED PER THE REQUIREMENTS OF THE MINNESOTA MANUAL OF UNIFORM TRAFFIC CONTROL DEVICES (MMUTCD) AND THE CITY. THIS SHALL INCLUDE ALL SIGNAGE, BARRICADES, FLASHERS AND FLAGGERS AS NEEDED. ALL PUBLIC STREETS SHALL BE OPEN TO TRAFFIC AT ALL TIMES. NO ROAD CLOSURES SHALL BE PERMITTED WITHOUT THE EXPRESSED AUTHORITY OF OF THE CITY.

7. ALL UTILITY PIPE BEDDING SHALL BE COMPACTED SAND OR FINE GRANULAR MATERIAL PER THE REQUIREMENTS OF THE CITY. ALL COMPACTION SHALL BE PERFORMED PER THE REQUIREMENTS OF THE CEAM SPECIFICATION.

8. ADJUST ALL EXISTING STRUCTURES, BOTH PUBLIC AND PRIVATE TO THE PROPOSED GRADES WHERE DISTURBED AND COMPLY WITH ALL REQUIREMENTS OF THE UTILITY OWNERS. STRUCTURES BEING RESET TO PAVED AREAS MUST MEET OWNERS REQUIREMENTS FOR TRAFFIC LOADING.

9. PROPOSED PIPE MATERIALS:

STORM SEWER	ALUMINIZED CSP OR DUAL WALL HDPE	12" DIAMETER
SANITARY SEWER	PVC SCH 40	6" DIAMETER

NORTH

0 20 40
SCALE IN FEET

WARNING:

THE CONTRACTOR SHALL BE RESPONSIBLE FOR CALLING FOR LOCATIONS OF ALL EXISTING UTILITIES. THEY SHALL COOPERATE WITH ALL UTILITY COMPANIES IN MAINTAINING THEIR SERVICE AND / OR RELOCATION OF LINES.

THE CONTRACTOR SHALL CONTACT GOPHER STATE ONE CALL AT 651-454-0002 AT LEAST 48 HOURS IN ADVANCE FOR THE LOCATIONS OF ALL UNDERGROUND WIRES, CABLES, CONDUITS, PIPES, MANHOLES, VALVES OR OTHER BURIED STRUCTURES BEFORE DIGGING. THE CONTRACTOR SHALL REPAIR OR REPLACE THE ABOVE WHEN DAMAGED DURING CONSTRUCTION AT NO COST TO THE OWNER.

U+B architecture & design, inc.
2609 Aldrich Avenue South
Suite 100
Minneapolis, Minnesota 55408
T | 612-870-2538
www.uplusb.com

Project Contacts

Mark Burgess, AIA
P | 612-870-2538
mark.burgess@uplusb.com

Dan Peterson
P | 612-870-2538
dan.peterson@uplusb.com

LOUCKS ASSOCIATES
Planning • Civil Engineering • Land Surveying
Landscape Architecture • Environmental
7200 Hemlock Lane - Suite 300
Minneapolis, Minnesota 55369
Telephone: (763)424-5505
Fax: (763)424-5822
www.loucksassociates.com
©2012

Design Development
October 1, 2013

Northrop School
1611 46th Street East
Minneapolis, MN 55407

FOR

Charter Schools Development Corporation
7272 Park Circle Drive, Suite 265
Hanover, MD 21076

ON BEHALF OF

Hiawatha Leadership Academy
4537 3rd Avenue South
Minneapolis, MN 55417

Project 2012019NRTP

Drawings Issued	Date
DD Plans	Oct 4, 2013
Land Use Application	Oct 16, 2013
City Comments	Nov 4, 2013

I hereby certify that this plan, specification or report was prepared by me or under my direct supervision and that I am a duly Licensed Professional Engineer under the laws of the State of Minnesota

Signature

Printed Name Michael J. St. Martin, PE

Registration Number 24440

UTILITY PLAN

C4-1

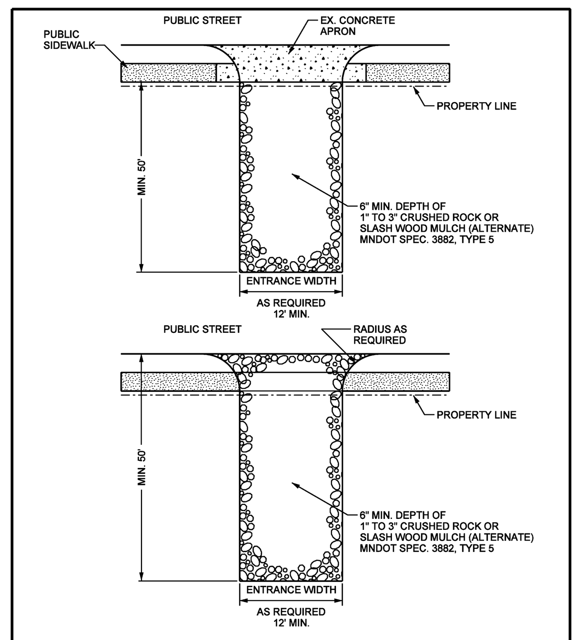

REMOVE TRACKED SEDIMENTS FROM PAVED SURFACES WITHIN 24 HOURS OF DEPOSITION
PICK UP OR VACUUM SWEEPER REQUIRED

REFERENCES:
MINNESOTA URBAN SMALL SITES BMP MANUAL, PP. 3-69 TO 3-73
MNDOT EROSION CONTROL HANDBOOK

MINNEAPOLIS CUSTOM MNDOT SPEC. REF. 2573
NOT TO SCALE

MINNEAPOLIS DEPARTMENT OF PUBLIC WORKS | DRAWN: DCD | DATE: 3/07 | APPROVED: HRS | DATE: 4/07
SEDIMENT CONTROL – ROCK ENTRANCE
STANDARD PLATE NO. SEWR-8002

SILT FENCE INSTALLATION

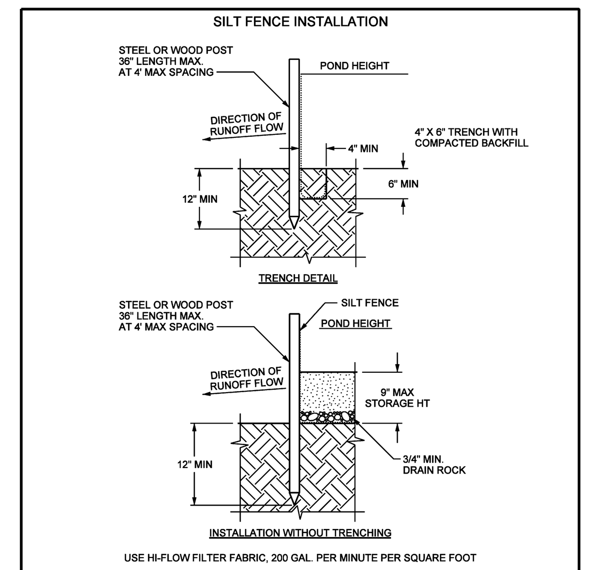

USE HI-FLOW FILTER FABRIC, 200 GAL. PER MINUTE PER SQUARE FOOT

NOTES:
1. SILT FENCE SHALL BE PLACED ON SLOPE CONTOURS TO MAXIMIZE PONDING EFFICIENCY.
2. INSPECT AND REPAIR FENCE AFTER EACH STORM EVENT AND REMOVE SEDIMENT WHEN NECESSARY. REQUIRED WHEN 1/3 FULL WITHIN 24 HOURS OF DISCOVERY. 9" MAXIMUM RECOMMENDED STORAGE HEIGHT.
3. REMOVED SEDIMENT SHALL BE DEPOSITED TO AN AREA THAT WILL NOT CONTRIBUTE SEDIMENT OFF-SITE AND PERMANENTLY STABILIZED ALSO SEE SEWR-8009.

REFERENCES:
MINNESOTA URBAN SMALL SITES BMP MANUAL
MNDOT EROSION CONTROL HANDBOOK

MINNEAPOLIS CUSTOM MNDOT SPEC. REF. 2573, 3886, 3889.2 TYPE I
NOT TO SCALE

MINNEAPOLIS DEPARTMENT OF PUBLIC WORKS | DRAWN: CXD | DATE: 3/03 | APPROVED: HRS | DATE: 4/07
SEDIMENT CONTROL – SILT FENCE
STANDARD PLATE NO. SEWR-8001

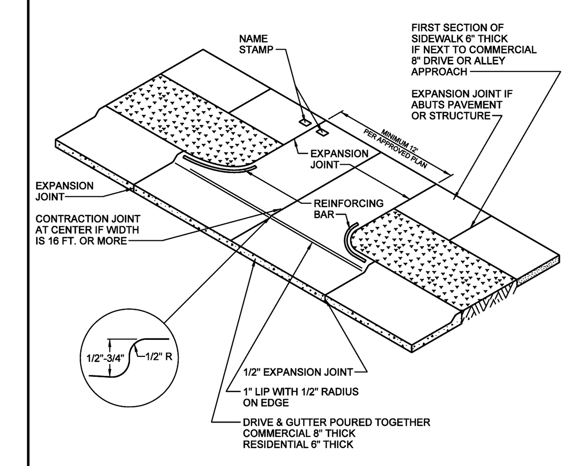

MINNEAPOLIS DEPARTMENT OF PUBLIC WORKS | DRAWN: JFC | DATE: 9/10/07 | APPROVED: GAS | DATE: 5/19/08
TYPICAL DRIVEWAY
STANDARD PLATE NO. ROAD-2002

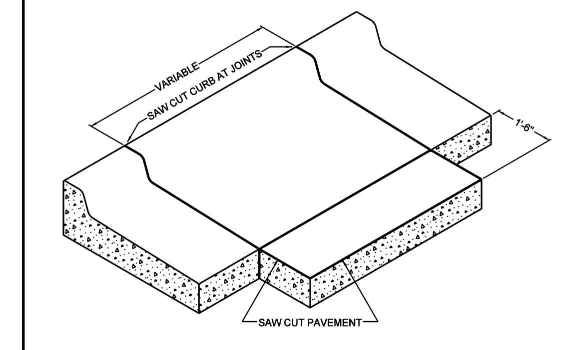

MINNEAPOLIS DEPARTMENT OF PUBLIC WORKS | DRAWN: JFC | DATE: 9/10/07 | APPROVED: GAS | DATE: 5/19/08
SAW CUT AT CURB AND GUTTER REMOVAL
STANDARD PLATE NO. ROAD-1010

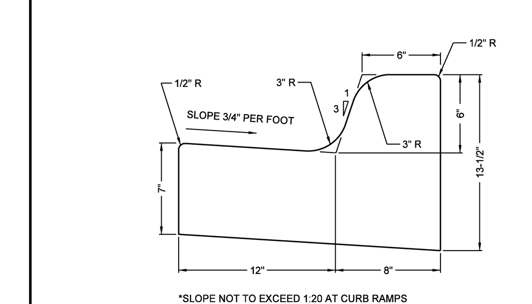

*SLOPE NOT TO EXCEED 1:20 AT CURB RAMPS

MINNEAPOLIS DEPARTMENT OF PUBLIC WORKS | DRAWN: JFC | DATE: 4/1/08 | APPROVED: GAS | DATE: 5/19/08
B612 CURB AND GUTTER
STANDARD PLATE NO. ROAD-1000

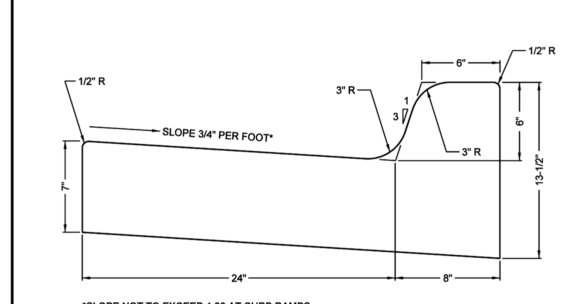

*SLOPE NOT TO EXCEED 1:20 AT CURB RAMPS

MINNEAPOLIS DEPARTMENT OF PUBLIC WORKS | DRAWN: JFC | DATE: 9/10/07 | APPROVED: GAS | DATE: 5/19/08
B-624 CURB AND GUTTER
STANDARD PLATE NO. ROAD-1003

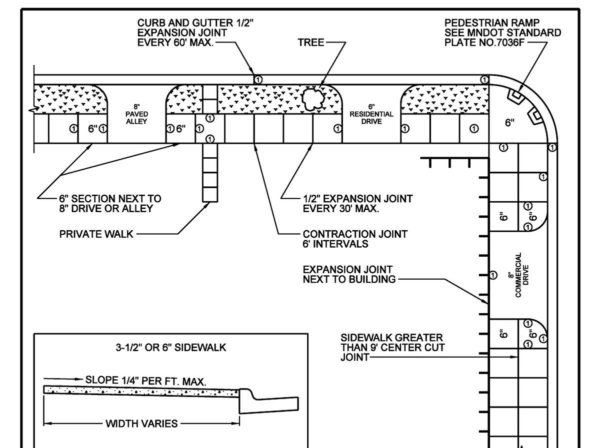

NOTE:
① EXPANSION MATERIAL REQUIRED (SEE MNDOT SPEC BOOK, 2301.3K JOINT CONSTRUCTION). FIRST SECTION NEXT TO COMMERCIAL DRIVEWAY OR ALLEY 6" THICK. 1/2" THICK EXPANSION JOINTS AT 30' INTERVALS (MAXIMUM). EXPANSION TO BE USED WHEN SIDEWALK ABUTS BUILDING. CONTRACTION JOINT TO BE CENTERED ON SIDEWALK WIDER THAN 9'. CONTRACTION JOINT TO BE PLACED EVERY 6' OR LESS.

MINNEAPOLIS DEPARTMENT OF PUBLIC WORKS | DRAWN: JFC | DATE: 9/10/07 | APPROVED: GAS | DATE: 5/19/08
TYPICAL SIDEWALK AND DRIVEWAY CONSTRUCTION
STANDARD PLATE NO. ROAD-2003

9" CLAY PIPE CATCH BASIN STAND PIPE FOR EROSION CONTROL

MINIMUM STAND PIPE HEIGHT LEVEL TO THE TOP OF THE CONCRETE STRUCTURE, MAXIMUM HEIGHT OF STAND PIPE IS 2" BELOW BOTTOM OF CB GRATE

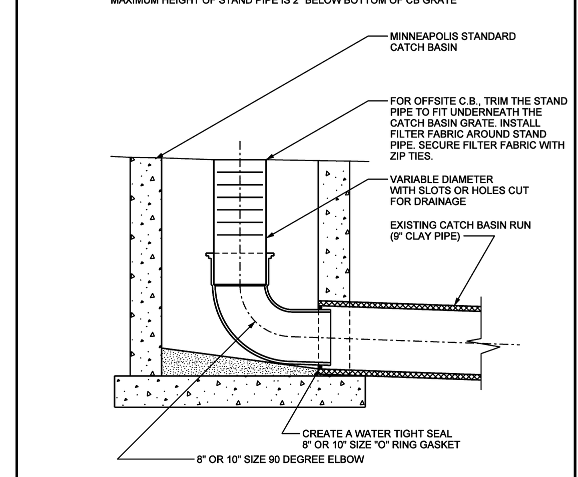

EMERGENCY MOBILIZATION MAY BE REQUIRED TO PREVENT LOCALIZED FLOODING DURING RAIN EVENTS TO IMPROVE FLOW RATE INSTALL A WRAP OF CHICKEN WIRE BETWEEN STAND PIPE AND GEOTEXTILE FABRIC DO NOT COVER TOP OF STAND PIPE WITH GEOTEXTILE FABRIC, THIS IS THE EMERGENCY OVERFLOW

NOTES:
WHERE C.B.'S ARE PAIRED, INSTALL EROSION CONTROL STAND PIPES ON DOWNSTREAM C.B., COVER UPSTREAM C.B.
INSPECT WEEKLY AND/OR AFTER EACH 1/2" RAINFALL, CLEAN WHEN 1/3 FULL OR AS NECESSARY

MINNEAPOLIS CUSTOM MNDOT SPEC. REF. 3891
NOT TO SCALE

USE HI-FLOW FILTER FABRIC, 200 GAL. PER MINUTE / SQ. FT.

MINNEAPOLIS DEPARTMENT OF PUBLIC WORKS | DRAWN: DCD | DATE: 3/07 | APPROVED: HRS | DATE: 3/07
SEDIMENT CONTROL CATCH BASIN STAND PIPE
STANDARD PLATE NO. SEWR-8000

SPECIFICATION NOTES:
ALL P.V.C. PIPE SHALL MEET OR EXCEED ASTM D 1784 AND ASTM D 2241. AASHTO M 278, CLASS PF 50, P.V.C., SDR- 26: ASTM D 3034, TYPE PSM P.V.C. SEWER PIPE, SDR 26 ASTM 758, SMOOTH WALL P.V.C., TYPE PS 46.
ALL SANITARY CONNECTIONS LESS THAN 10" DIAMETER SHALL BE SCH 40 AND CLEANED WITH PROPER PRIMER AS DEFINED IN THE RESPECTIVE ASTM SPECIFICATION FOR SOLVENT JOINTS AND ALL JOINTS SHALL BE SOLVENT CEMENTED JOINTS WITH PROPER ASTM APPROVED CEMENTS.
ALL SANITARY CONNECTIONS 10" DIAMETER OR GREATER SHALL BE SDR-26 OR GREATER WITH COMPRESSION FITTINGS MEETING ASTM STANDARDS.
ALL MAINLINE SANITARY SEWERS SHALL BE VITRIFIED CLAY PIPE (VCP) UNLESS APPROVED BY CITY ENGINEER TO SUBSTITUTE PVC. SANITARY MAINS CONSTRUCTED OF PVC MATERIALS SHALL BE SDR-26 OR GREATER.

STORM DRAIN ONLY
SDR-35 MAY BE SPECIFIED FOR CITY CB RUNS ONLY, AT THE DISCRETION OF THE CITY PROJECT ENGINEER
ALL STORM DRAIN MAIN LINES SHALL BE REINFORCED CONCRETE MATERIALS WHERE POSSIBLE.
PVC STORM DRAINS SHALL BE PRE APPROVED BY THE SEWER MAINTENANCE ENGINEER.

ALL DIMENSIONS BELOW ARE VARIABLE BY MANUFACTURER
ALL PVC SHALL BE CONSTRUCTED FROM NEW MATERIALS

NOMINAL PIPE SIZE	P.V.C. PIPING SYSTEM O.D.	AVERAGE I.D.			WALL THICKNESS			WEIGHT			MAX W.P. (PSI)		
		40	80	SDR 26	40	80	SDR 26	40	80	SDR 26	40	80	SDR 26
4"	4.500	3.998	3.786	4.134	0.237	0.337	0.173	2.006	2.782	1.569	220	320	160
5"	5.563	5.017	4.767	5.108	0.258	0.375	0.214	2.726	3.867	2.411	190	290	160
6"	6.625	6.031	5.709	6.084	0.280	0.432	0.255	3.535	5.313	3.414	180	280	160
8"	8.625	7.943	7.565	7.921	0.322	0.500	0.332	5.305	8.058	5.784	160	250	160
10"	10.750	9.976	9.492	9.874	0.365	0.593	0.413	7.532	11.956	8.971	140	230	160
12"	12.750	11.890	11.294	11.711	0.406	0.687	0.490	9.949	16.437	12.620	130	230	160
14"	14.000	13.072	12.410	12.860	0.437	0.750	0.538	11.810	19.790	15.205	130	220	160
16"	16.000	14.940	14.214	14.696	0.500	0.843	0.615	15.416	25.430	19.877	130	220	160
18"	18.000	16.809	6.014	16.533	0.562	0.937	0.692	20.112	31.830	25.156	130	220	160
20"	20.000	18.743	17.814	18.370	0.593	1.031	0.769	23.624	40.091	31.057	120	220	160
24"	24.000	22.544	21.418	22.043	0.687	1.218	0.923	32.873	56.882	44.744	120	210	160

DIMENSIONS ARE IN INCHES.
WEIGHTS ARE IN POUNDS PER FT.
MINIMUM COVER ON PIPE IS 18", LESS THAN 18" USE DUCTILE IRON PIPE CLASS 52 OR EQUIVELANT.
ALTERNATE PIPE MATERIAL FOR MAINLINE CONSTRUCTION.

MNDOT SPEC. REF. 3245
NOT TO SCALE

MINNEAPOLIS DEPARTMENT OF PUBLIC WORKS | DRAWN: DCD | DATE: 12/02 | APPROVED: HRS | DATE: 12/06
PVC PIPE STANDARDS
STANDARD PLATE NO. SEWR-4015

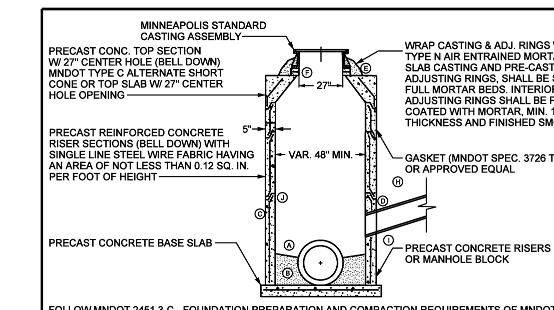

FOLLOW MNDOT 2451.3-C - FOUNDATION PREPARATION AND COMPACTION REQUIREMENTS OF MNDOT 2105.3 F1 - SPECIFIED DENSITY METHOD (100% COMPACTION REQUIREMENTS OF STANDARD PROCTOR)
MNDOT DESIGN F, MODIFIED
CONTINUOUS INSIDE DIAMETER
USE MINNEAPOLIS SHORT CONE SECTION (MNDOT TYPE C ALTERNATE) OR TOP SLAB ONLY

Ⓐ BOTTOM TO BE SHAPED 2/3 OF PIPE DIAMETER WITH POURED CONCRETE TO PROVIDE EFFICIENT FLOW.
Ⓑ WHEN THE INVERT OF THE INLET PIPE IS BELOW THE SPRING LINE OF THE MAIN, THEN PROVIDE CONCRETE "POWER FLOWS" FOR POSITIVE DOWN STREAM FLOW THROUGH MANHOLE.
Ⓒ PRE-CAST CONCRETE MANHOLE SECTIONS.
Ⓓ FILL AROUND INLET PIPE AND LIFTING HOLES WITH CEMENT MORTAR, TYPE N AIR ENTRAINED, FINISH SMOOTH AS NECESSARY. ALL PIPES CONNECTING TO MH'S SHALL BE TRIMMED FLUSH TO THE INTERIOR WALL OF THE MH STRUCTURE.
Ⓔ MANHOLE CASTING SHALL BE SET ON A FULL MORTAR BED, TYPE N AIR ENTRAINED
Ⓕ THE NUMBER OF CONCRETE ADJUSTING RINGS SHALL BE LIMITED TO PROVIDE A MAXIMUM THICKNESS OF 8" INCLUDING MORTAR, TYPE N AIR ENTRAINED WITH A MINIMUM OF 1 - 2" ADJUSTING RING. ALL ADJUSTING RINGS TO BE NEATLY SEALED WITH CONCRETE GROUT, TYPE N AIR ENTRAINED, ON THE INTERIOR OF THE STRUCTURE. MINIMUM OF 2" OF ADJUSTING RINGS & MORTAR TYPE N AIR ENTRAINED REQUIRED. ALL WOOD AND NON-CONCRETE ADJUSTING DEVICES SHALL BE REMOVED.
Ⓖ CONCRETE MANHOLE BLOCK MAY BE USED WITH THE APPROVAL OF CITY ENGINEER. INTERIOR & EXTERIOR OF BLOCK WORK SHALL BE MORTAR PLASTERED, TYPE N AIR ENTRAINED, TO A SMOOTH FINISH, MIN. 1/2" THICKNESS.
Ⓗ SUITABLE BACKFILL UNIFORMLY DISTRIBUTED IN 8" OR LESS LAYERS AND COMPACTED BEFORE SUCCESSIVE LAYERS ARE ADDED. MNDOT 2451.3 D - BACKFILLING EXCAVATIONS, COMPACTION IN ACCORDANCE WITH MNDOT 2105.3 F1 - SPECIFIED DENSITY METHOD.
Ⓙ FILL ANNULAR SPACE ON BELL END OF 1ST RISER SECTION WITH BRICK AND MORTAR, TYPE N AIR ENTRAINED, IF REQUIRED.
Ⓘ WATER STOP REQUIRED ON PVC, DIP, VCP, HDPE, HOBAS, PPP.

MINNEAPOLIS SHORT CONE SECTION SHALL BE USED UNLESS OTHERWISE SPECIFIED IN THE PLANS AND PLASTER COATED WITH TYPE N AIR ENTRAINED MORTAR (TO A SMOOTH FINISH).
ALL PRE-CAST MH RISER SECTIONS SHALL BE CONFIGURED TO PLACE THE BELL END DOWN.

MINNEAPOLIS CUSTOM MNDOT SPEC. REF. 2506
MODIFIED MNDOT 4000J, 4005L
NOT TO SCALE

MINNEAPOLIS DEPARTMENT OF PUBLIC WORKS | DRAWN: DCD | DATE: 12/09 | APPROVED: HRS | DATE: 12/09
TYPICAL MANHOLE CONSTRUCTION
STANDARD PLATE NO. SEWR-1000-R1

Preliminary Plan - Subject to change

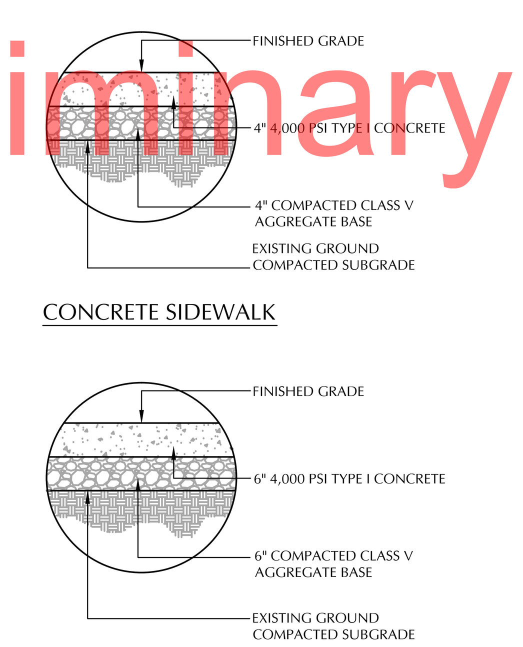

CONCRETE PAVEMENT SECTIONS
SCALE: N/A

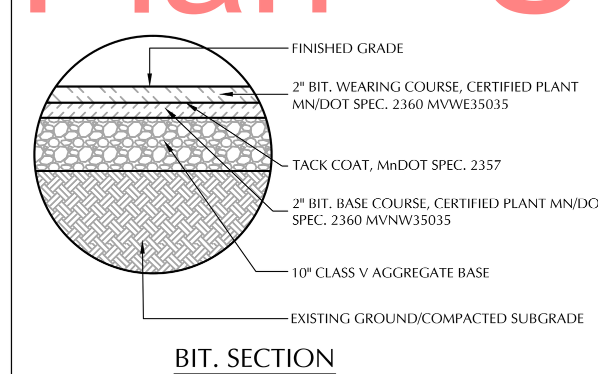

TYP. BITUMINOUS PAVEMENT SECTION
SCALE: N/A

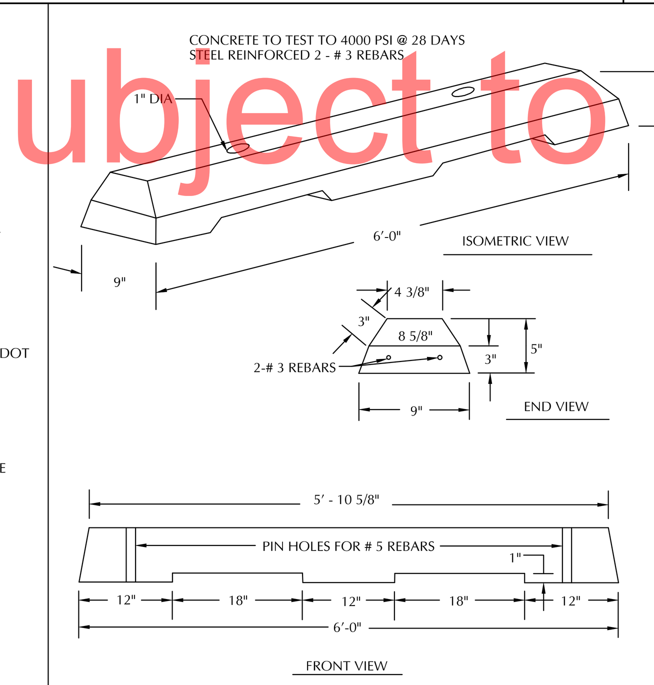

WHEEL STOPS
SCALE: N/A

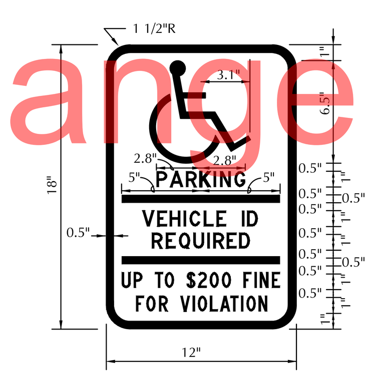

COLORS:
LEGEND AND BORDER - WHITE
WHITE SYMBOL ON BLUE BACKGROUND
BACKGROUND - BLUE

REDUCE SPACING 50%
SEE APPENDIX "E" FOR SYMBOL PROPORTIONS

NOTE: SIGNAGE REQUIREMENTS VARY: VERIFY ALL DIMENSIONS, COLOR, AND MOUNTING HEIGHTS, ETC. WITH LOCAL AND STATE AUTHORITIES.

HANDICAP SIGNS
SCALE: N/A

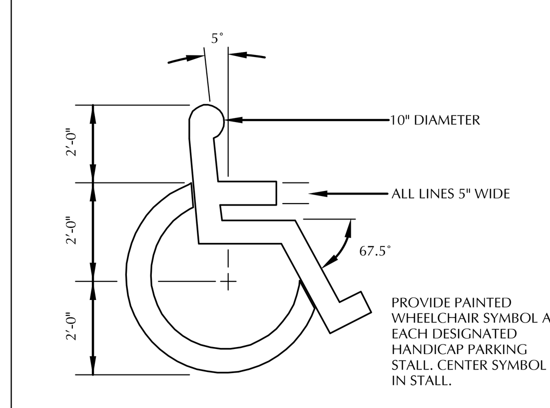

WHEELCHAIR SYMBOL
SCALE: N/A

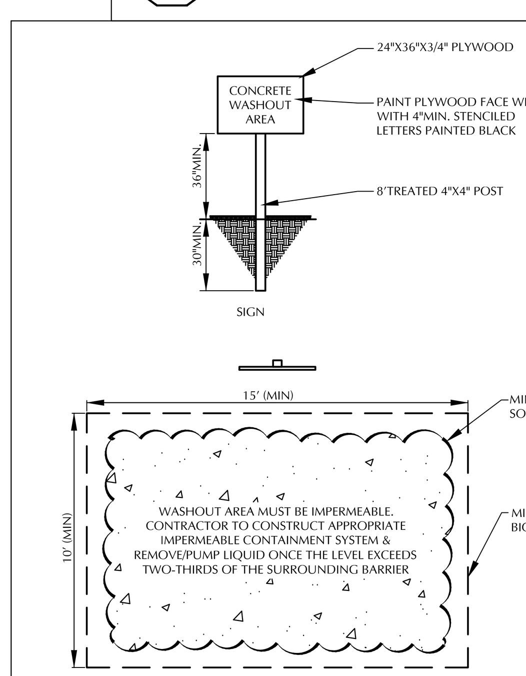

CONTRACTOR TO PLACE THE CONCRETE WASHOUT AREA NEAR THE CONSTRUCTION ENTRANCE

CONCRETE WASHOUT
SCALE: N/A

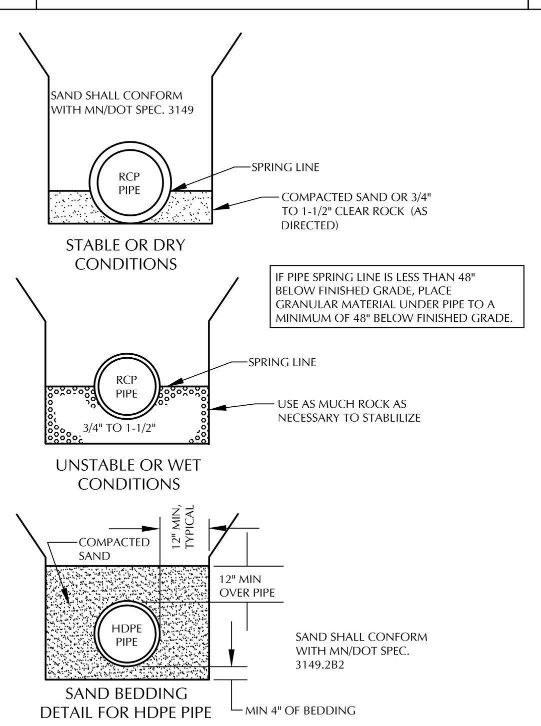

STORM SEWER PIPE BEDDING
SCALE: N/A

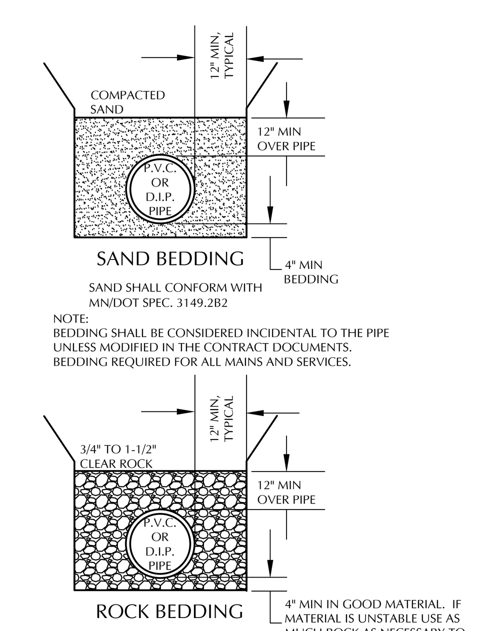

SAND SHALL CONFORM WITH MN/DOT SPEC. 3149.2B2
NOTE:
BEDDING SHALL BE CONSIDERED INCIDENTAL TO THE PIPE UNLESS MODIFIED IN THE CONTRACT DOCUMENTS.
BEDDING REQUIRED FOR ALL MAINS AND SERVICES.

SANITARY SEWER PIPE BEDDING
SCALE: N/A

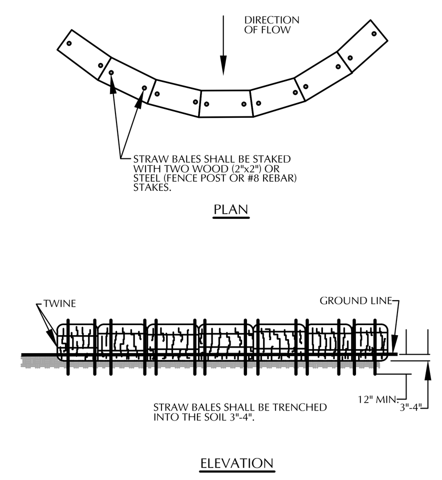

BIOLOG
SCALE: N/A

NOTES:
1. EXCAVATION SHALL BE CONDUCTED WITH TOOTHED BUCKET.
2. RIP UNDERLYING SOILS 18 TO 24 INCHES DEEP TO REMOVE COMPACTION PRIOR TO PLACING ENGINEERED SOILS.
3. FIRST LIFT OF ENGINEERED SOILS SHALL BE GENTLY MIXED WITH LOOSENED IN-SITU SOILS.
4. PROVIDE SEDIMENT BASINS AT ALL INLETS WITH RIP RAP. VERIFY BASIN SIZE (3' X 5' X 1' DEEP MIN.) AND RIP RAP TYPE PER PLAN, AND/OR WITH ENGINEER.
5. ALL CONSTRUCTION SEDIMENT SHALL BE REMOVED PRIOR TO PLACING ENGINEERED SOILS.
5. CONTRACTOR TO PROVIDE INFILTRATION TESTING AND OBTAIN APPROVAL BY ENGINEER PRIOR TO INSTALLATION OF PLANTS AND MULCH.

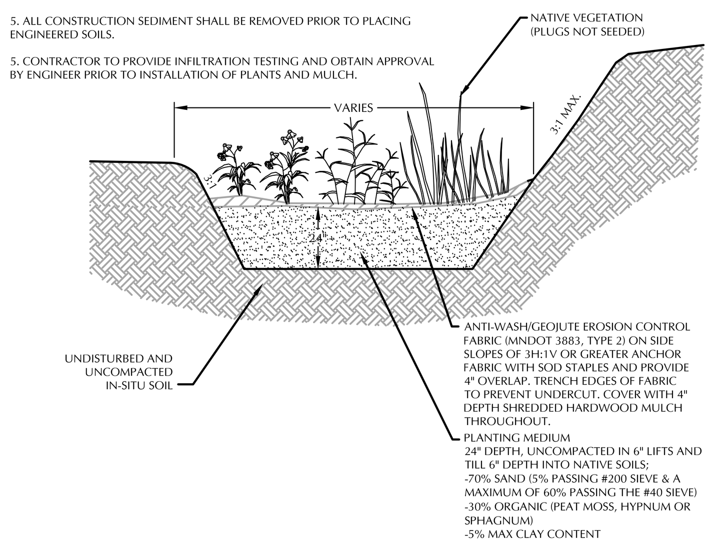

INFILTRATION BASIN TYPICAL SECTION
SCALE: N/A

U+B architecture & design, inc.
2609 Aldrich Avenue South
Suite 100
Minneapolis, Minnesota 55408
T | 612-870-2538
www.uplusb.com

Project Contacts
Mark Burgess, AIA
P | 612-870-2538
mark.burgess@uplusb.com

Dan Peterson
P | 612-870-2538
dan.peterson@uplusb.com

LOUCKS ASSOCIATES
Planning • Civil Engineering • Land Surveying
Landscape Architecture • Environmental
7200 Hemlock Lane - Suite 300
Minneapolis, Minnesota 55369
Telephone: (763)424-5505
Fax: (763)424-5822
www.loucksassociates.com

©2012

Design Development
October 1, 2013

Northrop School
1611 46th Street East
Minneapolis, MN 55407

FOR

Charter Schools Development Corporation
7272 Park Circle Drive, Suite 265
Hanover, MD 21076

ON BEHALF OF

Hiawatha Leadership Academy
4537 3rd Avenue South
Minneapolis, MN 55417

Project 2012019NRTP

Drawings Issued	Date
DD Plans	Oct 4, 2013
Land Use Application	Oct 16, 2013
City Comments	Nov 4, 2013

I hereby certify that this plan, specification or report was prepared by me or under my direct supervision and that I am a duly Licensed Professional Engineer under the laws of the State of Minnesota

Signature
Printed Name Michael J. St. Martin, PE
Registration Number 24440

CIVIL DETAILS

C8-1

LANDSCAPE PLAN:

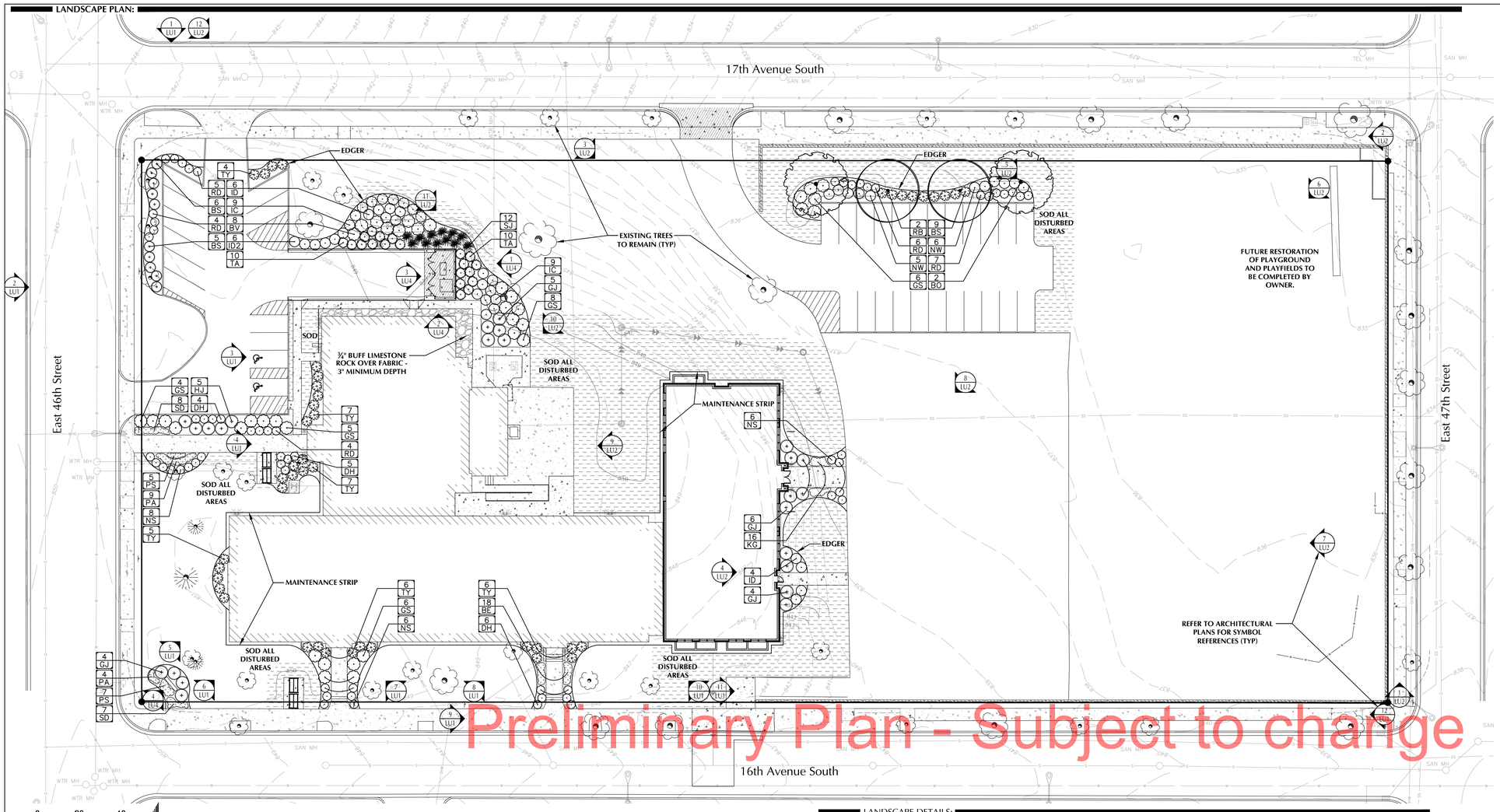

0 20 40 SCALE IN FEET — NORTH

LANDSCAPE REQUIREMENTS:

20 PERCENT OF THE SITE NOT OCCUPIED BY BUILDINGS SHALL BE LANDSCAPED WITH 1 CANOPY TREE PER 500 SF. AND 1 SHRUB PER 100 SF.
SITE AREA = 154,947 SF
BUILDING AREA = 27,756 SF
20% OF NON-BUILDING AREA = 25,438
TREES REQUIRED = 51
EXISTING TREES = 48
TREES PROPOSED = 4
TOTAL TREES = 52
SHRUBS REQUIRED = 254
SHRUBS PROPOSED = 254

ALL PARKING AREAS FRONTING A PUBLIC STREET SHALL BE LANDSCAPED WITH A 3' TALL HEDGE AND 1 TREE PER 25' OF PARKING LOT FRONTAGE.

PLANT SCHEDULE:

SYM	QTY	COMMON NAME	SCIENTIFIC NAME	MINIMUM SIZE	CONT	COMMENTS
DECIDUOUS TREES						
RB	2	RIVER BIRCH	Betula nigra	8' HGT	B&B	CLUMP
BO	2	BICOLOR OAK	Quercus bicolor	2.5" CAL	B&B	SINGLE STEM
DECIDUOUS SHRUBS						
IC	18	IROQUOIS BEAUTY CHOKEBERRY	Aronia melanocarpa 'Morton'	18" HGT	POT	PLANT 5' O.C.
ID	9	IVORY HALO DOGWOOD	Cornus alba 'Bailhalo"	18" HGT	POT	PLANT 5' O.C.
ID2	6	IVORY HALO DOGWOOD	Cornus alba 'Bailhalo"	36" HGT	POT	PLANT 5' O.C.
RD	26	RED GNOME DOGWOOD	Cornus alba sibirica 'Red Gnome'	24" HGT	POT	PLANT 4' O.C.
DH	15	DWARF BUSH HONEYSUCKLE	Diervilla lonicera	18" HGT	POT	PLANT 4' O.C.
GS	29	GRO-LOW FRAGRANT SUMAC	Rhus aromatica 'Gro-Low'	18" SPRD	POT	PLANT 6' O.C.
NW	11	NANA WILLOW	Salix purpurea 'Nana'	24" HGT	POT	PLANT 5' O.C.
NS	20	NEON FLASH SPIREA	Spirea japonica 'Neon Flash'	18" HGT	POT	PLANT 4' O.C.
BV	8	BLUE MUFFIN VIBURNUM	Viburnum dentatum 'Blue Muffin'	18" HGT	POT	PLANT 6' O.C.
CONIFEROUS SHRUBS						
GJ	20	GREY OWL JUNIPER	Juniperus virginiana 'Grey Owl'	18" SPRD	POT	PLANT 6' O.C.
HJ	5	HUGHES JUNIPER	Juniperus horizontalis 'Hughes'	18" SPRD	POT	PLANT 6' O.C.
SJ	12	SPARTAN JUNIPER	Juniperus chinensis 'Spartan'	8' HGT	POT	PLANT 5' O.C.
BS	20	BIRD'S NEST SPRUCE	Picea abies 'Nidiformis'	24" HGT	POT	PLANT 5' O.C.
TY	35	TAUNTON YEW	Taxus x media 'Taunton'	18" SPRD	POT	PLANT 5' O.C.
TA	20	TECHNY ARBORVITAE	Thuja occidentalis 'Techny'	8' HGT	POT	PLANT 5' O.C.
PERENNIALS						
PA	13	PURPLE DOME ASTER	Aster x 'Purple Dome'	1 GAL	POT	PLANT 2' O.C.
KG	16	KARL FOERSTER GRASS	Calamagrostis acutiflora 'Karl Foerster'	1 QT	POT	PLANT 2' O.C.
SD	15	STELLA D' ORO DAYLILY	Hemerocallis x 'Stella D' Oro'	1 QT	POT	PLANT 2' O.C.
BE	18	BLACK EYED SUSAN	Rudbeckia fulgida 'Goldsturm'	1 QT	POT	PLANT 2' O.C.
PS	12	PURPLE EMPEROR SEDUM	Sedum 'Purple Emperor'	1 QT	POT	PLANT 2' O.C.

MINIMUM SIZE DENOTES THE SMALLEST ALLOWABLE SIZE OF PLANTS AT PLANTING.

LANDSCAPE DETAILS:

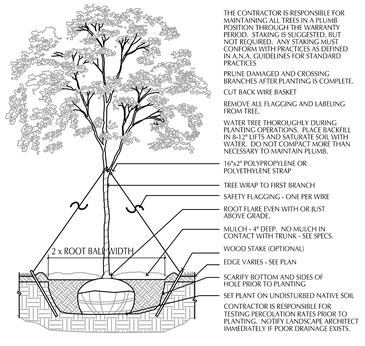

1 L1-1 DECIDUOUS TREE PLANTING DETAIL
SCALE: 1/2" = 1'-0" — Deciduous Tree.DWG

TREE PROTECTION NOTE:
INSTALL SNOW FENCE AROUND EACH TREE TO BE PROTECTED PRIOR TO GRADING. FENCE SHALL BE PLACED AT THE DRIP EDGE OR CRITICAL ROOT ZONES OF THE TREES. FENCING SHALL BE NO CLOSER THAN 6' TO THE TRUNK OF ANY TREE TO BE PROTECTED. THE PERIMETERS FOR TREES BEING PROTECTED SHALL BE DESIGNATED AT ALL TIMES DURING CONSTRUCTION ACTIVITY AND SIGNAGE SHALL BE INSTALLED AT ALL TREE PROTECTION AREAS THAT INSTRUCTS WORKERS TO STAY OUT. CONTRACTOR SHALL AVOID ALL AREAS WITHIN TREE PROTECTION FENCE. SOIL SHOULD BE PROTECTED FROM EROSION AND CHANGES IN CHEMISTRY FROM CONCRETE OR TOXIC MATERIALS SUCH AS FUELS AND PAINTS.

THE CONTRACTOR SHALL HAVE "TREE PAINT" ON SITE AT ALL TIMES. IF AN OAK IS WOUNDED DURING CONSTRUCTION, THE CONTRACTOR MUST IMMEDIATELY APPLY PAINT TO THE WOUND IN ORDER TO PREVENT OAK WILT. ALL DAMAGE TO TREES TO BE PROTECTED SHALL BE BROUGHT TO THE ATTENTION OF THE OWNER AND LANDSCAPE ARCHITECT.

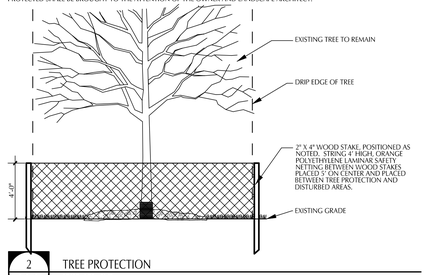

2 L1-1 TREE PROTECTION
SCALE: 1/2" = 1'-0" — Tree Protection.DWG

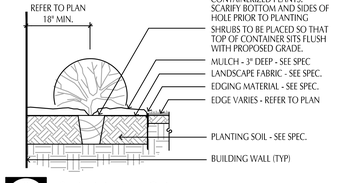

3 L1-1 SHRUB PLANTING DETAIL
SCALE: 3/4" = 1'-0"

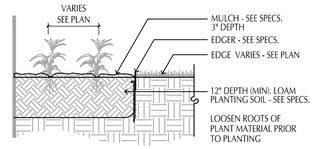

4 L1-1 PERENNIAL PLANTING
SCALE: 3/4" = 1'-0" — Perennial.Dwg

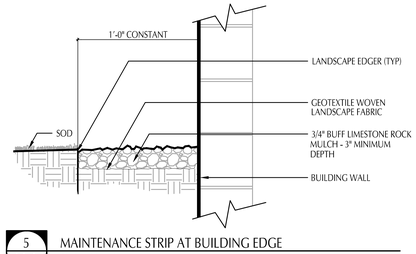

5 L1-1 MAINTENANCE STRIP AT BUILDING EDGE
SCALE: 1 1/2" = 1'-0"

GENERAL NOTES

CONTRACTOR SHALL VISIT SITE PRIOR TO SUBMITTING BID. HE SHALL INSPECT SITE AND BECOME FAMILIAR WITH EXISTING CONDITIONS RELATING TO THE NATURE AND SCOPE OF WORK.

VERIFY LAYOUT AND ANY DIMENSIONS SHOWN AND BRING TO THE ATTENTION OF THE LANDSCAPE ARCHITECT ANY DISCREPANCIES WHICH MAY COMPROMISE THE DESIGN AND/OR INTENT OF THE PROJECT'S LAYOUT.

ASSURE COMPLIANCE WITH ALL APPLICABLE CODES AND REGULATIONS GOVERNING THE WORK OR MATERIALS SUPPLIED.

CONTRACTOR SHALL PROTECT ALL EXISTING ROADS, CURBS/GUTTERS, TRAILS, TREES, LAWNS AND SITE ELEMENTS DURING PLANTING OPERATIONS. ANY DAMAGE TO SAME SHALL BE REPAIRED AT NO COST TO THE OWNER.

CONTRACTOR SHALL VERIFY ALIGNMENT AND LOCATION OF ALL UNDERGROUND AND ABOVE GRADE UTILITIES AND PROVIDE THE NECESSARY PROTECTION FOR SAME BEFORE CONSTRUCTION / MATERIAL INSTALLATION BEGINS (MINIMUM 10' - 0" CLEARANCE).

ALL UNDERGROUND UTILITIES SHALL BE LAID SO THAT TRENCHES DO NOT CUT THROUGH ROOT SYSTEMS OF ANY EXISTING TREES TO REMAIN.

EXISTING CONTOURS, TRAILS, VEGETATION, CURB/GUTTER AND OTHER EXISTING ELEMENTS BASED UPON INFORMATION SUPPLIED TO LANDSCAPE ARCHITECT BY OTHERS. CONTRACTOR SHALL VERIFY ANY AND ALL DISCREPANCIES PRIOR TO CONSTRUCTION AND NOTIFY LANDSCAPE ARCHITECT OF SAME.

THE ALIGNMENT AND GRADES OF THE PROPOSED WALKS, TRAILS AND/OR ROADWAYS ARE SUBJECT TO FIELD ADJUSTMENT REQUIRED TO CONFORM TO LOCALIZED TOPOGRAPHIC CONDITIONS AND TO MINIMIZE TREE REMOVAL AND GRADING. ANY CHANGE IN ALIGNMENT MUST BE APPROVED BY LANDSCAPE ARCHITECT.

LANDSCAPE INSTALLATION:

COORDINATE THE PHASES OF CONSTRUCTION AND PLANTING INSTALLATION WITH OTHER CONTRACTORS WORKING ON SITE.

NO PLANTING WILL BE INSTALLED UNTIL COMPLETE GRADING AND CONSTRUCTION HAS BEEN COMPLETED IN THE IMMEDIATE AREA.

WHERE SOD ABUTS PAVED SURFACES, FINISHED GRADE OF SOD/SEED SHALL BE HELD 1" BELOW SURFACE ELEVATION OF TRAIL, SLAB, CURB, ETC.

SOD ALL DESIGNATED AREAS DISTURBED DUE TO GRADING. SOD SHALL BE LAID PARALLEL TO THE CONTOURS AND SHALL HAVE STAGGERED JOINTS. ON SLOPES STEEPER THAN 3:1 OR IN DRAINAGE SWALES, THE SOD SHALL BE STAKED TO THE GROUND.

ALL PLANT MATERIAL SHALL COMPLY WITH THE LATEST EDITION OF THE AMERICAN STANDARD FOR NURSERY STOCK, AMERICAN ASSOCIATION OF NURSERYMEN. UNLESS NOTED OTHERWISE, DECIDUOUS SHRUBS SHALL HAVE AT LEAST 5 CANES AT THE SPECIFIED SHRUB HEIGHT. ORNAMENTAL TREES SHALL HAVE NO V CROTCHES AND SHALL BEGIN BRANCHING NO LOWER THAN 3' ABOVE ROOT BALL. STREET AND BOULEVARD TREES SHALL BEGIN BRANCHING NO LOWER THAN 6' ABOVE FINISHED GRADE.

PLAN TAKES PRECEDENCE OVER PLANT SCHEDULE IF DISCREPANCIES IN QUANTITIES EXIST. SPECIFICATIONS TAKE PRECEDENCE OVER NOTES.

ALL PROPOSED PLANTS SHALL BE LOCATED AND STAKED AS SHOWN ON PLAN. LANDSCAPE ARCHITECT MUST APPROVE ALL STAKING OF PLANT MATERIAL PRIOR TO ANY AND ALL DIGGING.

NO PLANT MATERIAL SUBSTITUTIONS WILL BE ACCEPTED UNLESS APPROVAL IS REQUESTED OF THE LANDSCAPE ARCHITECT BY THE LANDSCAPE CONTRACTOR PRIOR TO THE SUBMISSION OF A BID AND/OR QUOTATION.

ADJUSTMENTS IN LOCATION OF PROPOSED PLANT MATERIALS MAY BE NEEDED IN FIELD. SHOULD AN ADJUSTMENT BE ADVISED, THE LANDSCAPE ARCHITECT MUST BE NOTIFIED.

ALL PLANT MATERIALS SHALL BE FERTILIZED UPON INSTALLATION WITH DRIED BONE MEAL, OTHER APPROVED FERTILIZER MIXED IN WITH THE PLANTING SOIL PER THE MANUFACTURER'S INSTRUCTIONS OR MAY BE TREATED FOR SUMMER AND FALL INSTALLATION WITH AN APPLICATION OF GRANULAR 0-20-20 OF 12 OZ PER 2.5" CALIPER PER TREE AND 6 OZ PER SHRUB WITH AN ADDITIONAL APPLICATION OF 10-10-10 THE FOLLOWING SPRING IN THE TREE SAUCER.

ALL PLANTING AREAS RECEIVING GROUND COVER, PERENNIALS, ANNUALS, AND/OR VINES SHALL RECEIVE A MINIMUM OF 12" DEPTH OF PLANTING SOIL CONSISTING OF AT LEAST 45 PARTS TOPSOIL, 45 PARTS PEAT OR MANURE AND 10 PARTS SAND.

ALL PLANTS TO BE INSTALLED AS PER PLANTING DETAILS.

WRAPPING MATERIAL SHALL BE CORRUGATED PVC PIPING 1" GREATER IN CALIPER THAN THE TREE BEING PROTECTED OR QUALITY, HEAVY, WATERPROOF CREPE PAPER MANUFACTURED FOR THIS PURPOSE. WRAP ALL DECIDUOUS TREES PLANTED IN THE FALL PRIOR TO 12-1 AND REMOVE ALL WRAPPING AFTER 5-1.

BLACK POLY EDGER TO BE USED TO CONTAIN SHRUBS, PERENNIALS, AND ANNUALS WHERE BED MEETS SOD/SEED UNLESS NOTED OTHERWISE.

ALL SHRUB BED MASSINGS TO RECEIVE 3" DEEP SHREDDED HARDWOOD MULCH AND FIBER MAT WEED BARRIER.

ALL TREES TO RECEIVE 4" DEEP SHREDDED HARDWOOD MULCH WITH NO MULCH IN DIRECT CONTACT WITH TREE TRUNK.

ALL ANNUAL AND PERENNIAL PLANTING BEDS TO RECEIVE 3" DEEP SHREDDED HARDWOOD MULCH WITH NO WEED BARRIER.

SPREAD GRANULAR PRE EMERGENT HERBICIDE (PREEN OR EQUAL) PER MANUFACTURES RECOMMENDATIONS UNDER ALL MULCHED AREAS.

MAINTENANCE STRIPS TO HAVE POLY EDGER AND ¾" BUFF LIMESTONE ROCK MULCH.

THE LANDSCAPE CONTRACTOR SHALL PROVIDE THE OWNER WITH A WATERING/LAWN IRRIGATION SCHEDULE APPROPRIATE TO THE PROJECT SITE CONDITIONS AND TO PLANT MATERIAL GROWTH REQUIREMENTS.

IF THE LANDSCAPE CONTRACTOR IS CONCERNED OR PERCEIVES ANY DEFICIENCIES IN THE PLANT SELECTIONS, SOIL CONDITIONS OR ANY OTHER SITE CONDITION WHICH MIGHT NEGATIVELY AFFECT PLANT ESTABLISHMENT, SURVIVAL OR GUARANTEE, HE MUST BRING THESE DEFICIENCIES TO THE ATTENTION OF THE LANDSCAPE ARCHITECT PRIOR TO PROCUREMENT AND/OR INSTALLATION.

CONTRACTOR SHALL SUBMIT A WRITTEN REQUEST FOR THE OWNER ACCEPTANCE INSPECTION OF ALL LANDSCAPE AND SITE IMPROVEMENTS.

CONTRACTOR IS RESPONSIBLE FOR ON-GOING MAINTENANCE OF ALL NEWLY INSTALLED MATERIALS UNTIL TIME OF OWNER ACCEPTANCE. ANY ACTS OF VANDALISM OR DAMAGE WHICH MAY OCCUR PRIOR TO OWNER ACCEPTANCE SHALL BE THE RESPONSIBILITY OF THE CONTRACTOR. CONTRACTOR SHALL PROVIDE THE OWNER WITH A MAINTENANCE PROGRAM INCLUDING, BUT NOT NECESSARILY LIMITED TO, PRUNING, FERTILIZATION AND DISEASE/PEST CONTROL.

CONTRACTOR SHALL GUARANTEE NEW PLANT MATERIAL THROUGH ONE CALENDAR YEAR FROM THE DATE OF OWNER ACCEPTANCE.

WARRANTY (ONE FULL GROWING SEASON) FOR LANDSCAPE MATERIALS SHALL BEGIN ON THE DATE OF ACCEPTANCE BY THE LANDSCAPE ARCHITECT AFTER THE COMPLETION OF PLANTING OF ALL LANDSCAPE MATERIALS. NO PARTIAL ACCEPTANCE WILL BE CONSIDERED.

REPRODUCIBLE AS-BUILT DRAWING(S) OF ALL LANDSCAPE INSTALLATION AND SITE IMPROVEMENTS UPON COMPLETION OF CONSTRUCTION INSTALLATION AND PRIOR TO PROJECT ACCEPTANCE.

UNLESS NOTED OTHERWISE THE APPROPRIATE DATES FOR SPRING PLANT MATERIAL INSTALLATION AND SOD PLACEMENT IS FROM THE TIME GROUND HAS THAWED TO JUNE 15.

FALL SODDING IS GENERALLY ACCEPTABLE FROM AUGUST 15 - NOVEMBER 1. PLANTING OUTSIDE THESE DATES IS NOT RECOMMENDED. ANY ADJUSTMENT MUST BE APPROVED IN WRITING BY THE LANDSCAPE ARCHITECT.

CONIFEROUS PLANTING MAY OCCUR FROM AUGUST 15 - OCTOBER 1 AND FALL DECIDUOUS PLANTING FROM THE FIRST FROST UNTIL NOVEMBER 15. PLANTING OUTSIDE THESE DATES IS NOT RECOMMENDED. ANY ADJUSTMENT MUST BE APPROVED IN WRITING BY THE LANDSCAPE ARCHITECT.

PROTECT ALL EXISTING OAKS ON SITE SCHEDULED TO REMAIN. IF EXISTING OAKS ARE DAMAGED IN ANY MANNER, ABOVE OR BELOW GROUND IN THE ROOT SYSTEM, AN ASPHALTIC TREE PRUNING PAINT SHOULD BE APPLIED IMMEDIATELY AFTER WOUNDING. OAKS ARE NOT TO BE PRUNED, REMOVED OR TRANSPLANTED BETWEEN APRIL 15 AND JULY 1. NOTIFY LANDSCAPE ARCHITECT IF THESE DATES ARE UNAVOIDABLE.

LANDSCAPE CONTRACTOR SHALL ESTABLISH TO HIS SATISFACTION THAT SOIL AND COMPACTION CONDITIONS ARE ADEQUATE TO ALLOW FOR PROPER DRAINAGE AT AND AROUND THE BUILDING SITE.

IRRIGATION/WATERING NOTES:

IRRIGATION IS NOT PLANNED FOR THIS SITE. FOR THE HEALTH AND SURVIVIAL OF ALL PROPOSED PLANTINGS, REGULAR WATERING OF THE PLANTINGS IS RECOMMENDED.

FOR ESTABLISHMENT OF PLANTINGS, THE CONTRACTOR IS TO REGULARLY WATER NEWLY INSTALLED PLANTINGS DURING PROJECT CONSTRUCTION. CONTRACTOR TO PROVIDE OWNER WITH WATERING RECOMMENDATIONS/WATERING CONTRACT FOR THE 1 YEAR WARRANTY PERIOD.

U+B architecture & design, inc.
2609 Aldrich Avenue South
Suite 100
Minneapolis, Minnesota 55408
T | 612-870-2538
www.uplusb.com

Project Contacts

Mark Burgess, AIA
P | 612-870-2538
mark.burgess@uplusb.com

Dan Peterson
P | 612-870-2538
dan.peterson@uplusb.com

LOUCKS ASSOCIATES
Planning • Civil Engineering • Land Surveying
Landscape Architecture • Environmental
7200 Hemlock Lane - Suite 300
Minneapolis, Minnesota 55369
Telephone: (763)424-5505
Fax: (763)424-5822
www.loucksassociates.com

©2012

Design Development
October 1, 2013

Northrop School
1611 46th Street East
Minneapolis, MN 55407

FOR

Charter Schools Development Corporation
7272 Park Circle Drive, Suite 265
Hanover, MD 21076

ON BEHALF OF

Hiawatha Leadership Academy
4537 3rd Avenue South
Minneapolis, MN 55417

Project 2012019NRTP

Drawings Issued	Date
DD Plans	Oct 4, 2013
Land Use Application	Oct 16, 2013
City Comments	Nov 4, 2013

I hereby certify that this plan, specification or report was prepared by me or under my direct supervision and that I am a duly Licensed Landscape Architect under the laws of the State of Minnesota

Signature
Printed Name — Paul Kangas, LA
Registration Number — 26017

LANDSSCAPE PLAN

L1-1

© 2013 U+B Architecture & Design, Inc.

1 LU3 WEST ELEVATION
1/8" = 1'-0"

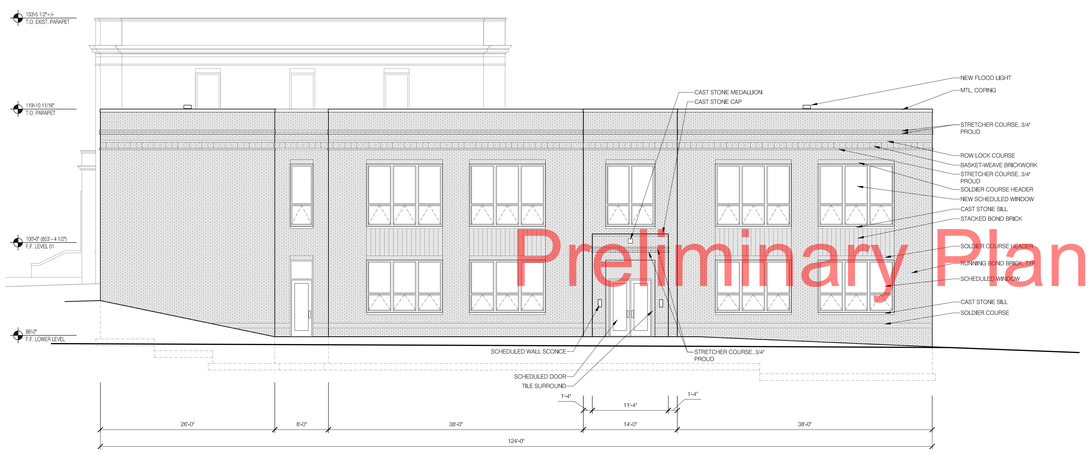

2 LU3 SOUTH ELEVATION | NEW ADDITION
1/8" = 1'-0"

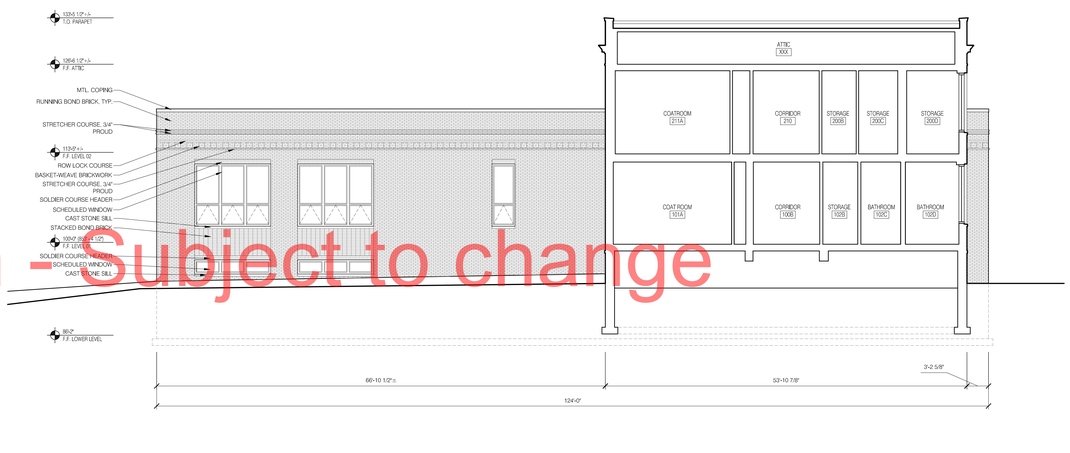

3 A201 NORTH ELEVATION / SECTION | NEW ADDITION
1/8" = 1'-0"

4 LU3 EAST ELEVATION
1/8" = 1'-0"

Preliminary Plan - Subject to change

U+B architecture & design, inc.
2609 Aldrich Avenue South,
Suite 100
Minneapolis, Minnesota 55408
T | 612-870-2538
www.uplusb.com

Project Contacts

Mark Burgess, AIA
C | 612-870-2538
mark.burgess@uplusb.com

Edie Sebesta
C | 612-870-2538
edie.sebesta@uplusb.com

Land Use Application
October 15, 2013

Northrop School
1611 46th Street East
Minneapolis, MN 55407

FOR

Charter Schools Development Corporation
7272 Park Circle Drive, Suite 265
Hanover, MD 21076

ON BEHALF OF

Hiawatha Leadership Academy
4537 3rd Avenue South
Minneapolis, MN 55417

Project 2012019NRTP

Drawings Issued	Date
Land Use Application	October 15, 2013
Revision	November 4, 2013

I hereby certify that this plan, specification or report was prepared by me or under my direct supervision and that I am a duly Licensed Architect under the laws of the State of Minnesota

Signature

Printed Name Mark A. Burgess

Registration Number 23883

EXTERIOR ELEVATIONS

LU3

© 2013 U+B Architecture & Design, Inc.

1 LU4 WEST ELEVATION
NTS

2 LU4 SOUTH ELEVATION
NTS

4 LU4 SOUTHWEST EYE-LEVEL PERSPECTIVE
NTS

3 LU4 SOUTWEST AERIAL RENDER
NTS

5 LU4 NORTHEAST EYE-LEVEL PERSPECTIVE
NTS

6 LU4 SOUTHEAST AERIAL RENDER
NTS

Preliminary Plan - Subject to change

U+B architecture & design, inc.
2609 Aldrich Avenue South,
Suite 100
Minneapolis, Minnesota 55406
T | 612-870-2538
www.uplusb.com

Project Contacts

Mark Burgess, AIA
C | 612-870-2538
mark.burgess@uplusb.com

Edie Sebesta
C | 612-870-2538
edie.sebesta@uplusb.com

Land Use Application
October 15, 2013

Northrop School
1611 46th Street East
Minneapolis, MN 55407

FOR

Charter Schools Development Corporation
7272 Park Circle Drive, Suite 265
Hanover, MD 21076

ON BEHALF OF

Hiawatha Leadership Academy
4537 3rd Avenue South
Minneapolis, MN 55417

Project 2012019NRTP

Drawings Issued	Date
Land Use Application	October 15, 2013
Revision	November 4, 2013

I hereby certify that this plan, specification or report was prepared by me or under my direct supervision and that I am a duly Licensed Architect under the laws of the State of Minnesota

Signature	
Printed Name	Mark A. Burgess
Registration Number	23883

ELEVATION RENDERS

LU5

© 2013 U+B Architecture & Design, Inc.

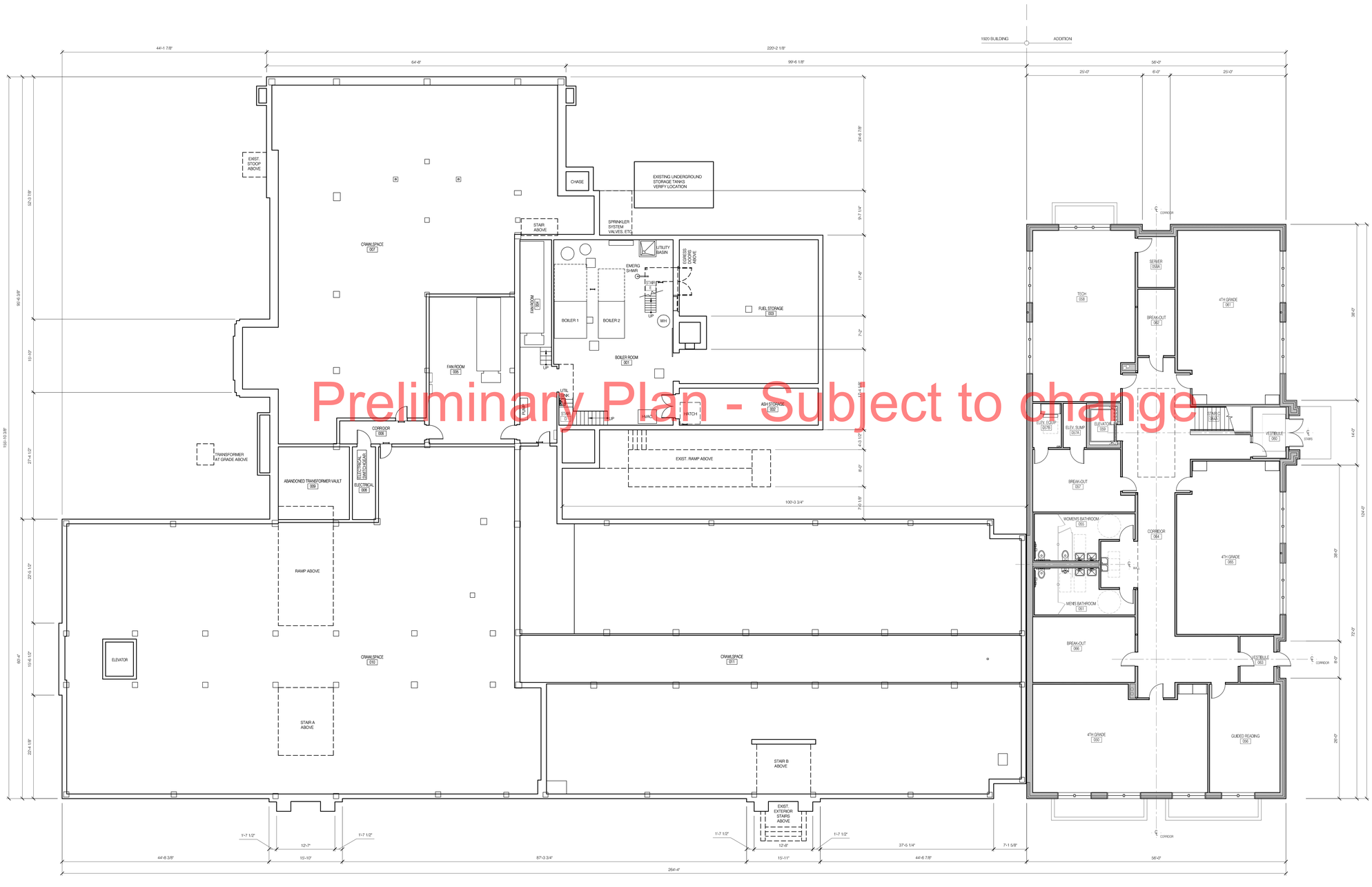

Preliminary Plan - Subject to change

FLOOR PLAN LEGEND

- EXISTING WALL TO REMAIN
- NEW SCHEDULED WALL

NORTH

1 A111 BASEMENT FLOOR PLAN
1/8"=1'-0"

U+B architecture & design, inc.
2609 Aldrich Avenue South,
Suite 100
Minneapolis, Minnesota 55406
T | 612-870-2538
www.uplusb.com

Project Contacts

Mark Burgess, AIA
C | 612-870-2538
mark.burgess@uplusb.com

Edie Sebesta
C | 612-870-2538
edie.sebesta@uplusb.com

Land Use Application

October 15, 2013

Northrop School

1611 46th Street East
Minneapolis, MN 55407

FOR

Charter Schools Development Corporation
7272 Park Circle Drive, Suite 265
Hanover, MD 21076

ON BEHALF OF

Hiawatha Leadership Academy
4537 3rd Avenue South
Minneapolis, MN 55417

Project 2012019NRTP

Drawings Issued	Date
Land Use Application	October 15, 2013
Revision	November 4, 2013

I hereby certify that this plan, specification or report was prepared by me or under my direct supervision and that I am a duly Licensed Architect under the laws of the State of Minnesota

Signature

Printed Name Mark A. Burgess

Registration Number 23883

BASEMENT FLOOR PLAN

LU6

© 2013 U+B Architecture & Design, Inc.

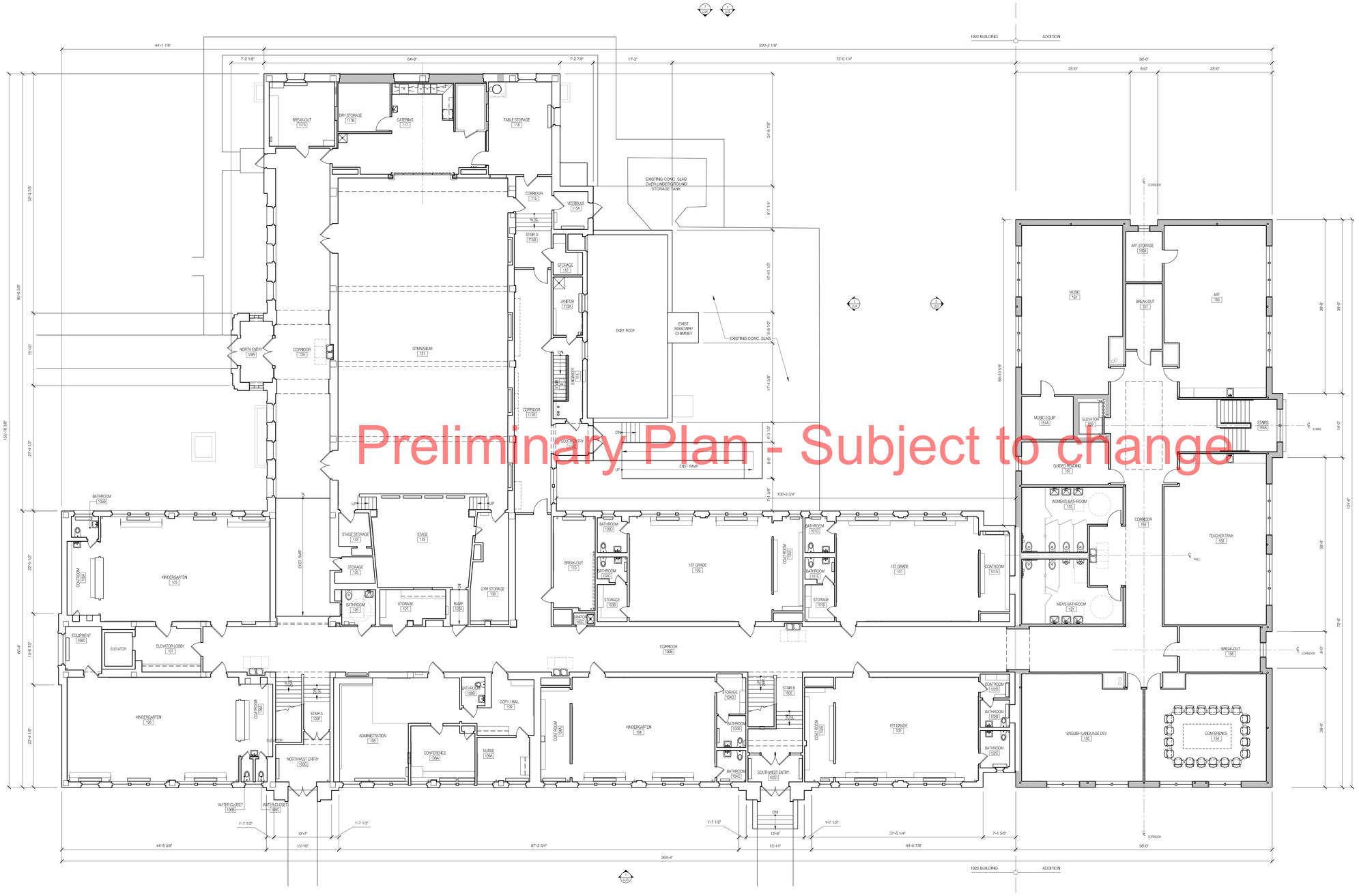

Preliminary Plan - Subject to change

1 LU7 FIRST FLOOR PLAN
1/8" = 1'

U+B architecture & design, inc.
2609 Aldrich Avenue South,
Suite 100
Minneapolis, Minnesota 55406
T | 612-870-2538
www.uplusb.com

Project Contacts

Mark Burgess, AIA
C | 612-870-2538
mark.burgess@uplusb.com

Edie Sebesta
C | 612-870-2538
edie.sebesta@uplusb.com

Land Use Application
October 15, 2013

Northrop School
1611 46th Street East
Minneapolis, MN 55407

FOR

Charter Schools Development Corporation
7272 Park Circle Drive, Suite 265
Hanover, MD 21076

ON BEHALF OF

Hiawatha Leadership Academy
4537 3rd Avenue South
Minneapolis, MN 55417

Project 2012019NRTP

Drawings Issued	Date
Land Use Application	October 15, 2013
Revision	November 4, 2013

I hereby certify that this plan, specification or report was prepared by me or under my direct supervision and that I am a duly Licensed Architect under the laws of the State of Minnesota

Signature

Printed Name Mark A. Burgess

Registration Number 23883

FIRST FLOOR PLAN

LU7

© 2013 U+B Architecture & Design, Inc.

U+B architecture & design, inc.
2609 Aldrich Avenue South,
Suite 100
Minneapolis, Minnesota 55408
T | 612-870-2538
www.uplusb.com

Project Contacts

Mark Burgess, AIA
C | 612-870-2538
mark.burgess@uplusb.com

Edie Sebesta
C | 612-870-2538
edie.sebesta@uplusb.com

FLOOR PLAN LEGEND

- EXISTING WALL TO REMAIN
- NEW SCHEDULED WALL

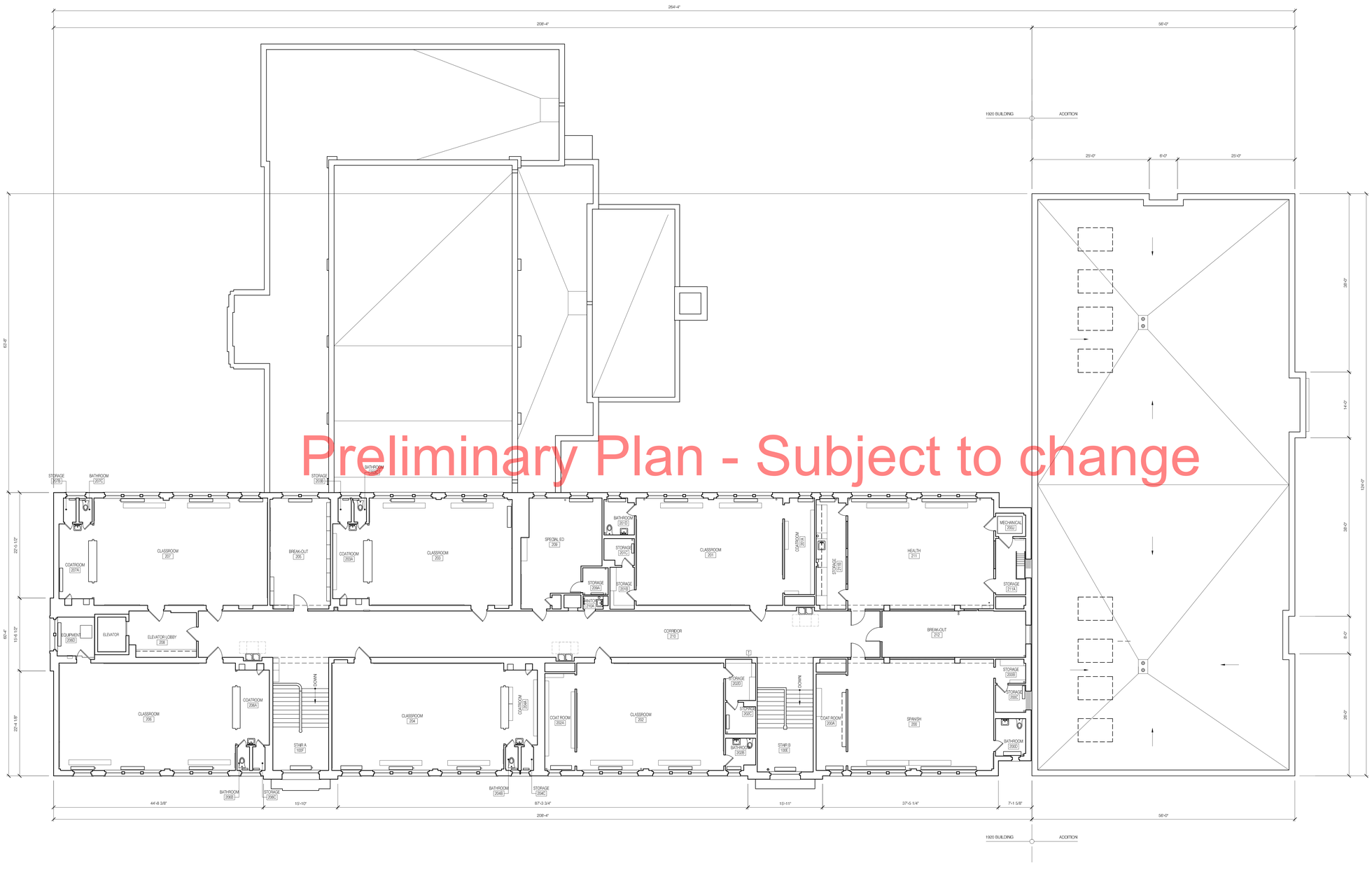

Preliminary Plan - Subject to change

1 LU8 SECOND FLOOR PLAN
1/8" = 1'

Land Use Application

October 15, 2013

Northrop School

1611 46th Street East
Minneapolis, MN 55407

FOR

Charter Schools Development Corporation
7272 Park Circle Drive, Suite 265
Hanover, MD 21076

ON BEHALF OF

Hiawatha Leadership Academy
4537 3rd Avenue South
Minneapolis, MN 55417

Project 2012019NRTP

Drawings Issued	Date
Land Use Application	October 15, 2013
Revision	November 4, 2013

I hereby certify that this plan, specification or report was prepared by me or under my direct supervision and that I am a duly Licensed Architect under the laws of the State of Minnesota

Signature

Printed Name Mark A. Burgess

Registration Number 23883

SECOND FLOOR PLAN

LU8

© 2013 U+B Architecture & Design, Inc.