PLANT SCHEDULE

QUANTITY	SIZE	CONDITION	BOTANICAL NAME	COMMON NAME	PLANT TYPE
4	2 1/2"	BB	QUERCUS BICOLOR	SWAMP WHITE OAK	CANOPY TREE
5	#15	CONTAINER	JUNIPERUS SCOPULORUM "MEDORA"	MEDORA JUNIPER	ORNAMENTAL TREE
1	#20	CLUMP	AMELANCHER X GRANDIFLORA "AUTUMN BRILLIANCE"	AUTUMN BRILLIANCE SERVICEBERRY	SHRUB
7	#5	CONTAINER	BUXUS "SELINCOE"	CHICAGOLAND GREEN BOXWOOD	SHRUB
38	#5	CONTAINER	COTONEASTER LUCIDUS	HEDGE COTONEASTER	SHRUB
1	#5	CONTAINER	HYDRANGEA PANICULATA "PINK DIAMOND"	PINK DIAMOND HYDRANGEA	SHRUB
6	#2	CONTAINER	SPIREA X BUMALDA "MAGIC CARPET"	MAGIC CARPET SPIREA	SHRUB
1	#5	CONTAINER	SYRINGA VULGARIS "CHARLES JOLY"	CHARLES JOLY LILAC	SHRUB
1	#5	CONTAINER	THUJA OCCIDENTALIS "HETZ MIDGET"	HETZ MIDGET ARBORVITAE	SHRUB
1	#7	CONTAINER	THUJA OCCIDENTALIS "HOLMSTRUP"	HOLMSTRUP ARBORVITAE	SHRUB
27	#1	CONTAINER	CALAMAGROSTIS X ACUTIFLORA "KARL FOERSTER"	KARL FOERSTER REED GRASS	GRASS
12	#1	CONTAINER	ECHINACEA PURPURICA "MAGNUS"	MAGNUS CONEFLOWER	PERENIAL
64	#1	CONTAINER	HEMEROCALLIS "HYPERION"	HYPERION DAYLILY	PERENIAL
3	#1	CONTAINER	HOSTA "FRANCEE"	FRANCEE HOSTA	PERENIAL
KEY NOTES:					

PLANTING & BED PREPARATION
1. PROVIDE 12" OF PLANTING SOIL IN ALL PLANTING BED AREAS.
   PLANTING SOIL TO CONSIST OF EQUAL PARTS TOP SOIL, SAND, AND ORGANIC COMPOST, THOROUGHLY MIXED.
2. LOOSEN ALL COMPACTED SOIL TO A DEPTH OF 8" BELOW PLANTING AREAS.
3. INSTALL STEEL EDGER LEVEL WITH SOD GRADE. INSTALL MULCH TO TOP OF STEEL EDGER.
4. PLANT ALL TREES AND SHRUBS SO THAT FIRST ORDER OF ROOTS ARE AT GRADE.
5. WATER IMMEDIATELY AFTER PLANTING.
   WATER UNTIL THE GROUND FREEZES A MINIMUM OF 1" PER WEEK.
6. PLACE 4" OF SHREDDED HARDWOOD MULCH OVER ENTIRE PLANTING AREA, NATURAL COLOR.
7. WARRANTY - PLANT MATERIAL REPLACEMENT FOR 1 YEAR.

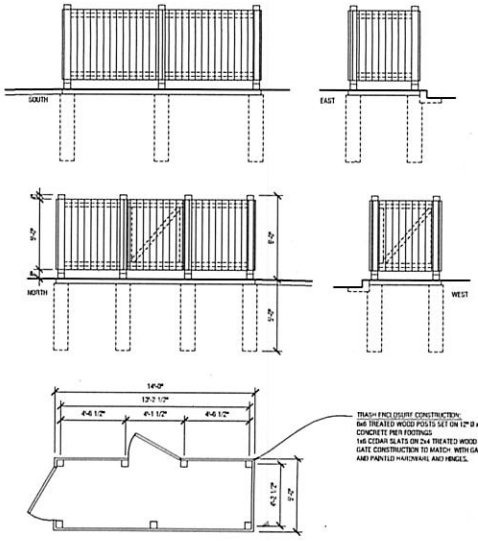

3 TRASH ENCLOSURE PLAN AND ELEVATIONS

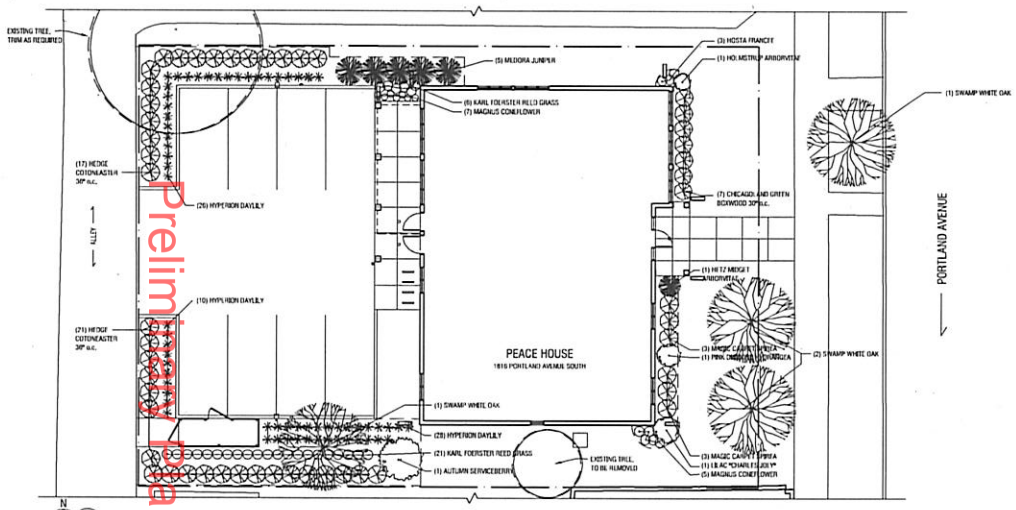

1 LANDSCAPE & PLANTING PLAN
1" = 10'

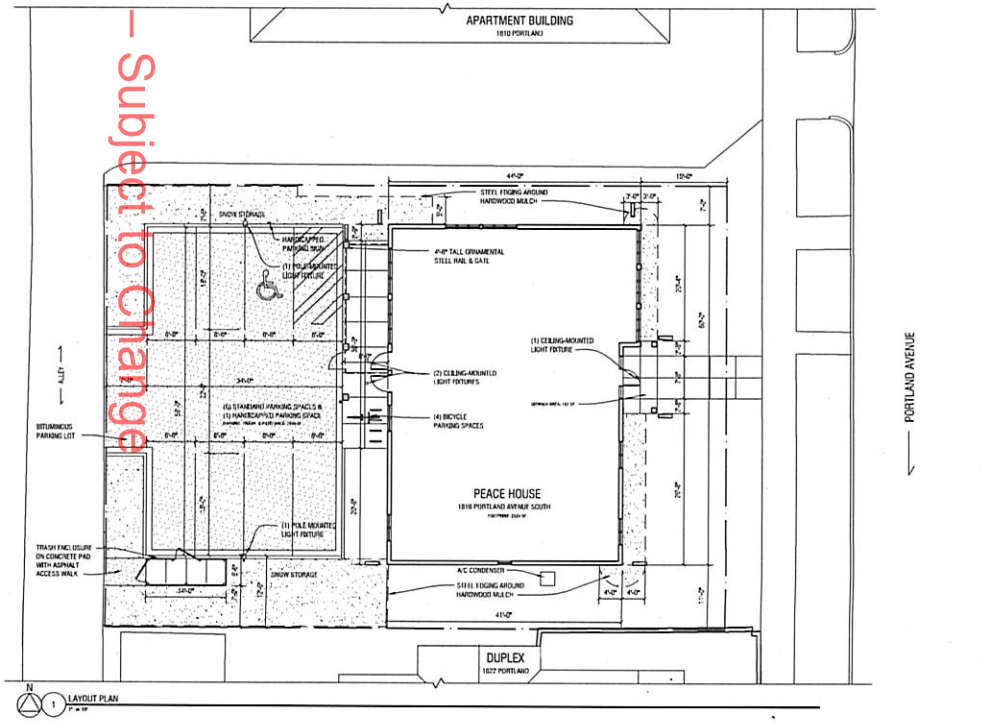

1 LAYOUT PLAN
1" = 10'

Preliminary Plan – Subject to Change

CERMAK RHOADES ARCHITECTS
175 Fourth Avenue North, Suite 400, St. Paul, MN 55401
p 651.223.5422 f 651.223.5728 www.cermakrhoades.com

I hereby certify that this plan, specification, or report was prepared by me or under my direct supervision and that I am a duly registered Architect under the laws of the State of Minnesota.

Signed

DATE

REG. NO.

NOT FOR CONSTRUCTION

LANDSCAPE & LAYOUT PLAN

PEACE HOUSE
1816 PORTLAND AVENUE SOUTH
MINNEAPOLIS, MN

REVISIONS

DATE ISSUED	10/03/11
JOB NO.	1030
FILE NAME	1030-A1.1.dwg

A1.1

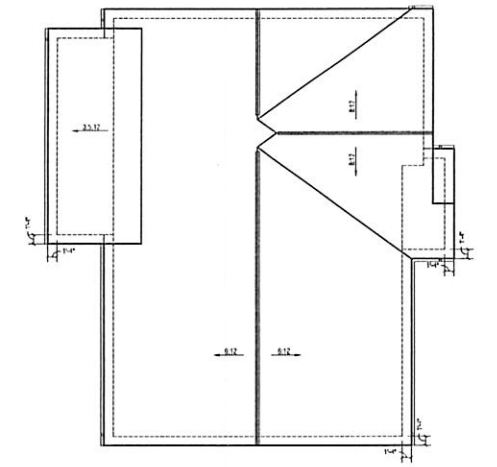

3 ROOF PLAN
1/8" = 1'-0"

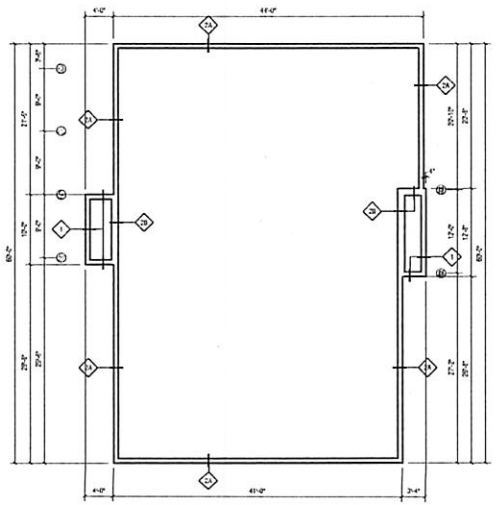

2 FOUNDATION PLAN
1/8" = 1'-0"

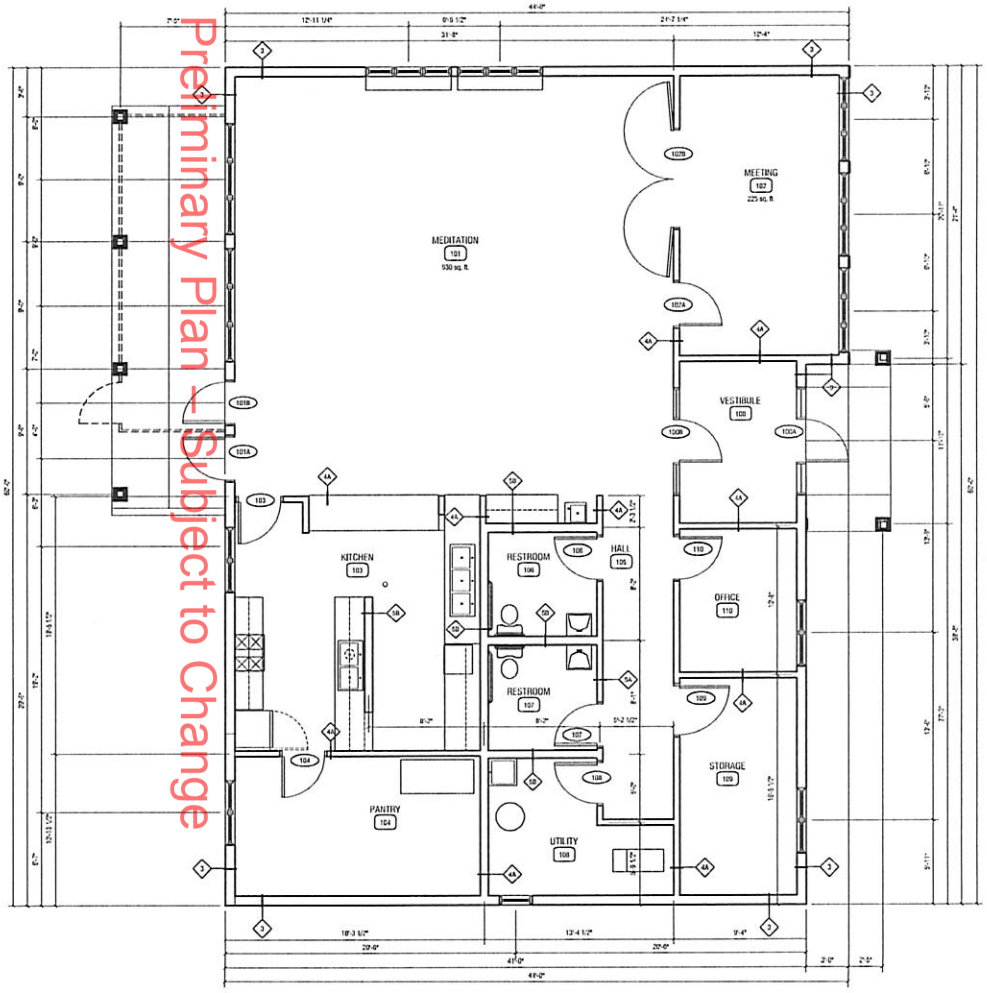

1 FIRST FLOOR PLAN
1/4" = 1'-0"

Preliminary Plan - Subject to Change

CERMAK RHOADES ARCHITECTS

I hereby certify that this plan, specification, or report was prepared by me or under my direct supervision and that I am a duly registered Architect under the laws of the State of Minnesota.

Signed

DATE

REG. NO.

NOT FOR CONSTRUCTION

PLANS

PEACE HOUSE

1816 PORTLAND AVENUE SOUTH
MINNEAPOLIS, MN

REVISIONS

DATE ISSUED	05/31/2011
JOB NO.	1030
FILE NAME	1030-A2.1.dwg

A2.1

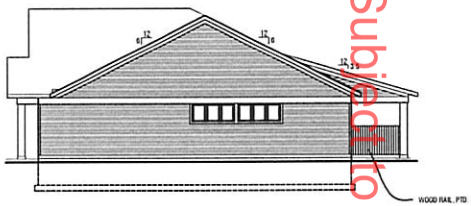

4 NORTH EXTERIOR ELEVATION

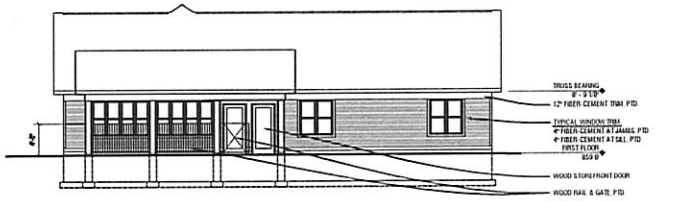

2 WEST EXTERIOR ELEVATION

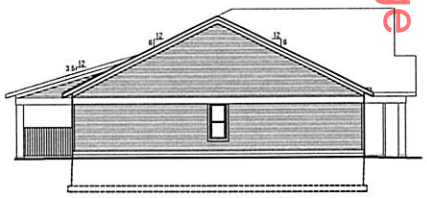

3 SOUTH EXTERIOR ELEVATION

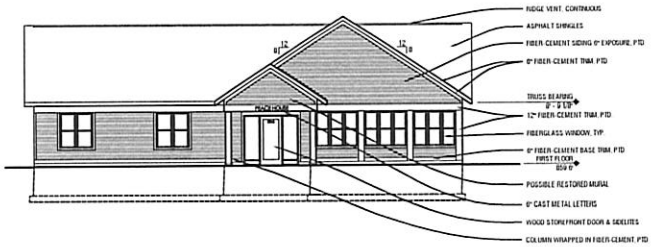

1 EAST EXTERIOR ELEVATION

Preliminary Plan – Subject to Change

CERMAK RHOADES ARCHITECTS

I hereby certify that this plan, specification, or report was prepared by me or under my direct supervision and that I am a duly registered Architect under the laws of the State of Minnesota.

Signed

DATE

REG. NO

NOT FOR CONSTRUCTION

ELEVATIONS

PEACE HOUSE

1816 PORTLAND AVENUE SOUTH
MINNEAPOLIS, MN

REVISIONS

DATE ISSUED	08/31/2011
JOB NO	1030
FILE NAME	1030-A4.1.dwg

A4.1