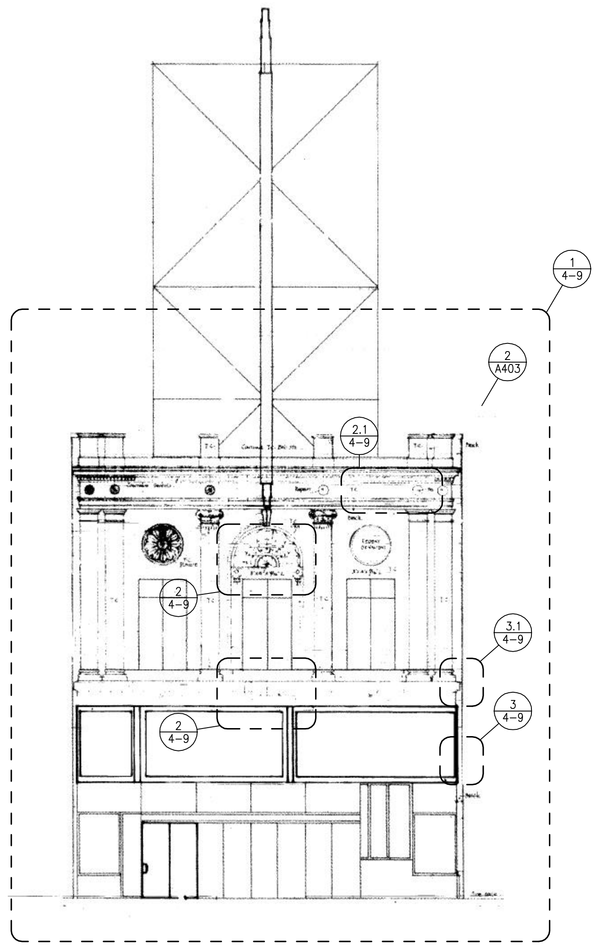

① HENNEPIN AVENUE ELEVATION
1/8" = 1'-0"

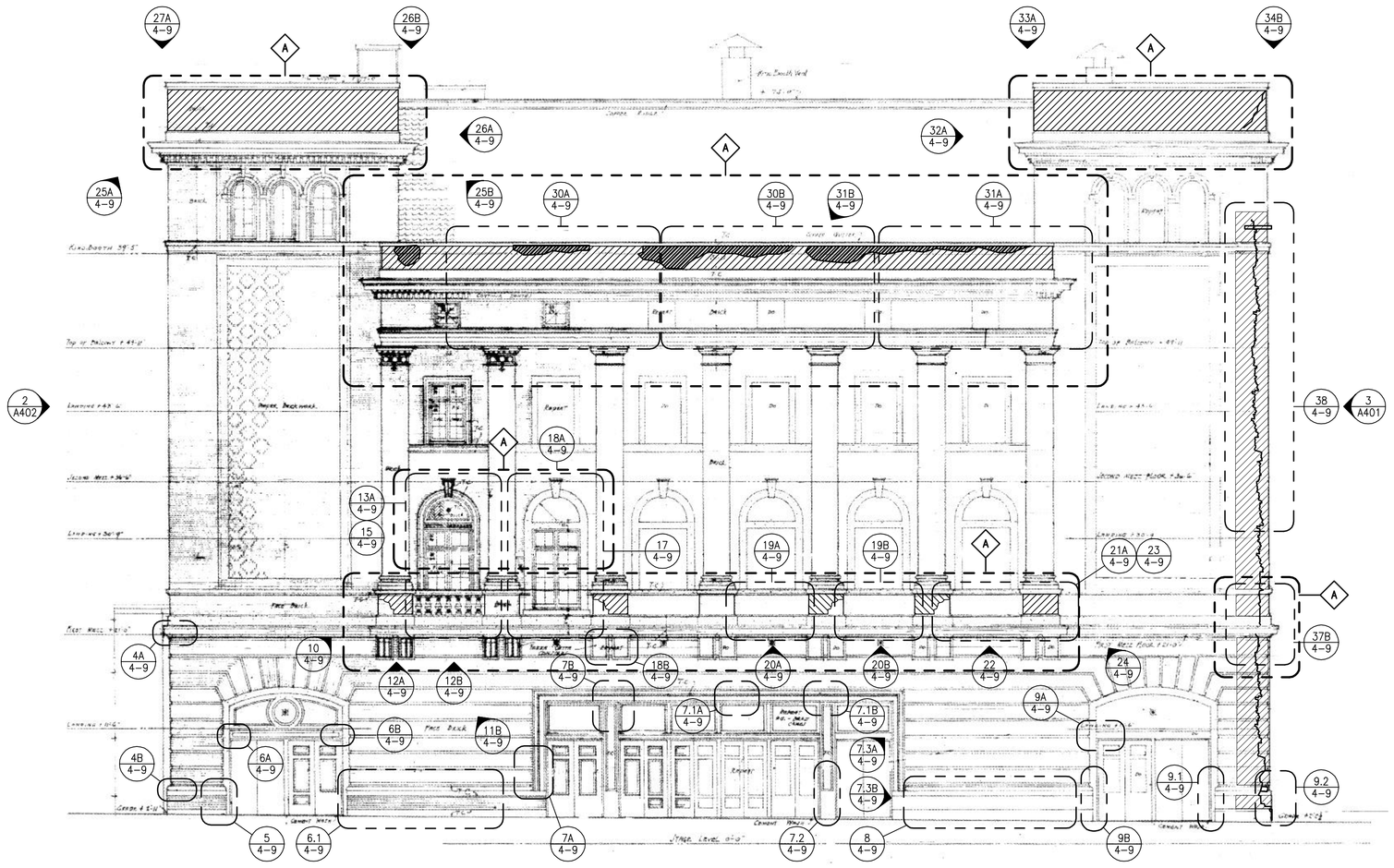

② 9TH STREET ELEVATION
1/8" = 1'-0"

GENERAL NOTES:

HENNEPIN AVENUE FACADE:

INSPECT PREVIOUS REPAIRS MADE DURING THE 1992 RENOVATION TO EVALUATE PERFORMANCE OVER TIME. AESTHETIC & PHYSICAL QUALITIES OF OLD REPAIRS MAY HELP GUIDE REPAIR VS REPLACEMENT DECISIONS FOR CURRENT WORK TO BE DONE IN OTHER LOCATIONS. (SEE 2 & 2.1/4-9)

9TH STREET FACADE:
1. BRICK MASONRY–

EXAMINE MORTAR JOINTS IN BRICK MASONRY. CUT OUT AND REPOINT ALL JOINTS FOUND TO BE OPEN, MISSING, LOOSE, DETERIORATED, OR OTHERWISE UNSOUND TO MATCH ORIGINAL "RAKED" JOINT PROFILE. REMOVE AND REPLACE CRACKED, BROKEN AND DETERIORATED BRICK WITH THE FOLLOWING GIVEN HIGHEST PRIORITY:

– REPAIR BRICK PIERS @ BALCONY BALUSTRADE (SEE 10 THROUGH 24/4-9)
– EVALUATE THE CONDITION OF THE BRICK WALL ABOVE THE CORNICE @ THE CORNER "TOWERS". THE NORTH TOWER @ 9TH ST & HAWTHORNE ST HAS CRACKS VISIBLE FROM STREET LEVEL (SEE 32 & 40.2/4-9)
– EVALUATE THE CONDITION OF THE BRICK WALL ABOVE THE CORNICE ALONG THE MAIN FACADE. SEE DESCRIPTION BELOW.

2. VARIOUS PIECES OF TERRA COTTA @ WATER TABLE BANDS, STRING COURSE BANDS, AND MISCELLANEOUS TERRA COTTA TRIM ARE CRACKED, CHIPPED OR OTHERWISE DAMAGED. REPAIR IN PLACE WHERE POSSIBLE UNLESS OTHERWISE NOTED. (SEE DETAILS AND KEY NOTES ON ELEVATIONS)

3. THE FOLLOWING TERRA COTTA UNITS SHOULD BE CONSIDERED FOR REPLACEMENT:

– CORNER UNIT OF STRING COURSE @ NORTH TOWER (SEE 37, 39, 40 & 40.1/4-9)
– SEE NOTES 4-6 BELOW

4. TERRA COTTA BALCONY (SEE 10-24/4-9)

REVIEW WATERPROOFING @ MEZZANINE BALCONY FLOOR. STRUCTURAL SUPPORT TO BALCONY ENDS MAY BE COMPROMISED. HEAVY WATER DAMAGE TO BRICK MASONRY AND TERRA COTTA SUGGESTS PLUGGED DRAINS OR INSUFFICIENT DRAINAGE. OBVIOUS DISPLACEMENT OF TERRA COTTA & A SLIGHT SAG VISIBLE @ THE FRONT EDGE INDICATE POSSIBLE DETERIORATION OF THE STRUCTURAL STEEL SUPPORT SYSTEM. EVALUATE TERRA COTTA ANCHORAGE SYSTEM & SUPPORTING STEEL FOR STRUCTURAL INTEGRITY W/ STRUCTURAL ENGINEER.

SEVERAL OF THE BALUSTERS APPEAR TO BE LOOSE AND MAY REQUIRE RESETTING. SEVERAL PIECES ALONG THE TOP AND BOTTOM RAIL ARE CRACKED OR SPALLED AND MAY NEED REPLACEMENT IF REPAIR IS NOT PRACTICAL. SEVERAL PIECES OF THE SOFFIT & SUPPORTING BRACKETS ARE ALSO CRACKED, CHIPPED, OR BADLY BROKEN. HOWEVER, REPLACEMENT OF THESE ELEMENTS WOULD LIKELY REQUIRE SUBSTANTIAL DISMANTLING OF THE BALCONY. WHERE POSSIBLE, REPAIR THESE IN PLACE.

5. TERRA COTTA WINDOW SURROUNDS (SEE 15, 17, 18A/4-9)

THE TERRA COTTA WINDOW SURROUNDS ON THE TWO SOUTHERNMOST BALCONY WINDOW BAYS ARE SEVERELY DAMAGED. THE TERRA COTTA LINTELS AND ALL PIECES ON BOTH SIDES OF THE JAMBS OF EACH OF THESE WINDOWS WILL REQUIRE REPLACEMENT. INVESTIGATE TERRA COTTA ANCHORAGE SYSTEM & SUPPORTING STEEL @ LINTEL FOR STRUCTURAL INTEGRITY W/ STRUCTURAL ENGINEER. REPLACE CORRODED STEEL STRUCTURE.

6. TERRA COTTA CORNICE (SEE 25-37/4-9)

THE CORNER DRIPSTONE PIECES OF THE UPPER TERRA COTTA CORNICE @ EACH OF THE TWO TOWERS ARE CRACKED. THERE ARE OPEN JOINTS VISIBLE FROM THE STREET ALONG THE ENTIRE CORNICE. EVALUATE ALL CORNER UNITS TO DETERMINE STRUCTURAL SOUNDNESS AND THE EXTENT OF REPAIRS REQUIRED. INVESTIGATE TERRA COTTA ANCHORAGE SYSTEM & SUPPORTING STEEL FOR EXTENT OF DETERIORATION. COORDINATE W/ STRUCTURAL ENGINEER.

THE BRICK MASONRY WALL ABOVE THE MAIN FACADE CORNICE APPEARS DAMP IN A NUMBER OF PLACES (SEE 30 & 31/4-9), SOME OF WHICH CORRESPONDS TO DAMAGED CORNICE TERRA COTTA UNITS IMMEDIATELY BELOW. THE BRICK IN THIS AREA, WHEN VIEWED FROM INSIDE THE BUILDING, SHOWS SIGNS OF SEVERE WATER DAMAGE: EFFLORESCENCE, SPALLED BRICK, DAMP MASONRY, SEVERE PLASTER DAMAGE @ BOTH THE CEILING AND FACE OF EXTERIOR WALL, AND EXTREMELY CORRODED STEEL ANGLES (PRESUMABLY SUPPORTING THE CORNICE). SEE 31.1C/4-9 FOR TYP INTERIOR WALL SURFACE CONDITION AT THIS LOCATION. IDENTIFY & RESOLVE PRIMARY SOURCE OF WATER PENETRATION. INVESTIGATE TERRA COTTA ANCHORAGE SYSTEM & SUPPORTING STEEL FOR EXTENT OF DETERIORATION. COORDINATE W/ STRUCTURAL ENGINEER.

INVESTIGATE PROBLEM AREAS INDICATED ON ELEVATIONS & IMPLEMENT REPAIRS AS DIRECTED BY THE ARCHITECT TO RESOLVE ALL IDENTIFIED SOURCES OF WATER PENETRATION BEFORE ANY FURTHER REPAIRS ARE MADE TO TERRA COTTA OR BRICKWORK. INVESTIGATE TERRA COTTA ANCHORAGE SYSTEM & SUPPORTING STEEL FOR EXTENT OF DETERIORATION. COORDINATE W/ STRUCTURAL ENGINEER.

A NUMBER OF JOINTS ALONG THE CORNICE DRIPSTONE APPEAR TO HAVE BEEN TREATED W/ SOME TYPE OF BITUMINOUS COMPOUND OR SEALANT. THIS REPAIR SEEMS TO BE COMPOUNDING THE DETERIORATION OF TERRA COTTA UNITS. REMOVE INCOMPATIBLE SEALANT & REPOINT JOINTS. DRIPSTONE UNITS ARE CRACKED, SPALLED @ JOINTS, AND SHOW ADDITIONAL GLAZE SPALLING ALONG FACE OF UNIT. TERRA COTTA LINTELS OVER UPPER STORY WINDOWS ARE ALSO CRACKED. SEE DETAILS FOR MORE INFORMATION.

HAWTHORNE AVENUE FACADE:
1. BRICK MASONRY–

EXAMINE MORTAR JOINTS IN BRICK MASONRY. CUT OUT AND REPOINT ALL JOINTS FOUND TO BE OPEN, MISSING, LOOSE, DETERIORATED, OR OTHERWISE UNSOUND TO MATCH ORIGINAL "RAKED" JOINT PROFILE. REMOVE AND REPLACE CRACKED, BROKEN AND DETERIORATED BRICK WITH THE FOLLOWING GIVEN HIGHEST PRIORITY:

– EVALUATE THE CONDITION OF THE BRICK WALL ABOVE THE CORNICE @ THE NORTH "TOWER". BOTH CORNERS HAVE LARGE CRACKS VISIBLE FROM STREET LEVEL. (SEE 40.2/4-9)
– THE UPPER PORTION OF THE BRICK MASONRY STAGE HOUSE WALL IS SEVERELY CRACKED AT THE NE CORNER. REMOVE A SECTION OF BRICK SO STRUCTURAL ENGINEER CAN INVESTIGATE STRUCTURAL INTEGRITY @ WATER DAMAGED AREA. (SEE 67/4-9)

2. VARIOUS PIECES OF TERRA COTTA @ WATER TABLE BANDS, STRING COURSE BANDS, AND MISCELLANEOUS TERRA COTTA TRIM ARE CRACKED, CHIPPED OR OTHERWISE DAMAGED. REPAIR IN PLACE WHERE POSSIBLE UNLESS OTHERWISE NOTED. (SEE DETAILS AND KEY NOTES ON ELEVATIONS)

3. THE FOLLOWING TERRA COTTA UNITS SHOULD BE CONSIDERED FOR REPLACEMENT:

– CORNER @ EAST END OF STRING COURSE @ NORTH TOWER (SEE 39B, 40/4-9)
– EAST END OF STRING COURSE @ RECESSED VESTIBULE (SEE 42/4-9)
– MAJORITY OF TERRA COTTA @ RECESS LINTEL– SEE NOTE 4 BELOW.

4. TERRA COTTA LINTEL (SEE 42-45/4-9)

THE TERRA COTTA LINTEL AT THE RECESSED VESTIBULE NEAR THE NE CORNER OF THE BUILDING IS SEVERELY DETERIORATED AND PRESENTS A LIFE-SAFETY ISSUE. MANY PIECES ARE CRACKED AND BROKEN. EXPOSED STEEL @ THE HORIZONTAL JOINT ABOVE THE SOFFIT IS EXTREMELY CORRODED & IS BREAKING & DISPLACING THE SOFFIT PIECES. TEMPORARY WOOD 2x SUPPORTS HAVE BEEN INSTALLED TO PREVENT A COLLAPSE.

DISMANTLE AND REBUILD THE ENTIRE LINTEL. SALVAGE AS MANY PIECES OF TERRA AS POSSIBLE. MOST TERRA COTTA IN THIS AREA WILL HOWEVER REQUIRE REPLACEMENT. INVESTIGATE TERRA COTTA ANCHORAGE SYSTEM & SUPPORTING STEEL FOR EXTENT OF DETERIORATION. COORDINATE W/ STRUCTURAL ENGINEER.

5. TERRA COTTA CORNICE (SEE 25-34/4-9)

THE CORNER DRIPSTONE PIECES OF THE UPPER TERRA COTTA CORNICE @ THE NORTH TOWER & STAGE HOUSE ARE CRACKED. THERE ARE OPEN JOINTS VISIBLE FROM THE STREET ALONG THE ENTIRE CORNICE. EVALUATE ALL CORNER UNITS TO DETERMINE STRUCTURAL SOUNDNESS & THE EXTENT OF REPAIRS REQUIRED. INVESTIGATE TERRA COTTA ANCHORAGE SYSTEM & SUPPORTING STEEL FOR EXTENT OF DETERIORATION. COORDINATE W/ STRUCTURAL ENGINEER.

INVESTIGATE PROBLEM AREAS INDICATED ON ELEVATIONS & IMPLEMENT REPAIRS AS DIRECTED BY THE ARCHITECT TO RESOLVE ALL IDENTIFIED SOURCES OF WATER PENETRATION BEFORE ANY FURTHER REPAIRS ARE MADE TO TERRA COTTA OR BRICKWORK. INVESTIGATE TERRA COTTA ANCHORAGE SYSTEM & SUPPORTING STEEL FOR EXTENT OF DETERIORATION. COORDINATE W/ STRUCTURAL ENGINEER.

A NUMBER OF JOINTS ALONG THE CORNICE DRIPSTONE APPEAR TO HAVE BEEN TREATED W/ SOME TYPE OF BITUMINOUS COMPOUND OR SEALANT. THIS REPAIR SEEMS TO BE COMPOUNDING THE DETERIORATION OF TERRA COTTA UNITS. REMOVE INCOMPATIBLE SEALANT & REPOINT JOINTS. DRIPSTONE UNITS ARE CRACKED, SPALLED @ JOINTS, AND SHOW ADDITIONAL GLAZE SPALLING ALONG FACE OF UNIT.

6. HANDRAILS @ STAIRWELLS– (SEE 49, 53 THROUGH 55/4-9)

VERTICAL HANDRAIL SUPPORTS ARE EXTREMELY CORRODED & PRESENT A POTENTIAL LIFE-SAFETY ISSUE. EVENTUALLY, THE WHOLE RAILING SYSTEM SHOULD BE REPLACED TO MATCH THE ONE INSTALLED IN THE WEST EXIT STAIR DURING THE 1992 RENOVATION. THIS DETAIL IS MEANT TO SERVE AS A TEMPORARY SOLUTION UNTIL CONCRETE WORK IS FINISHED & PERMANENT REPAIRS CAN BE MADE.

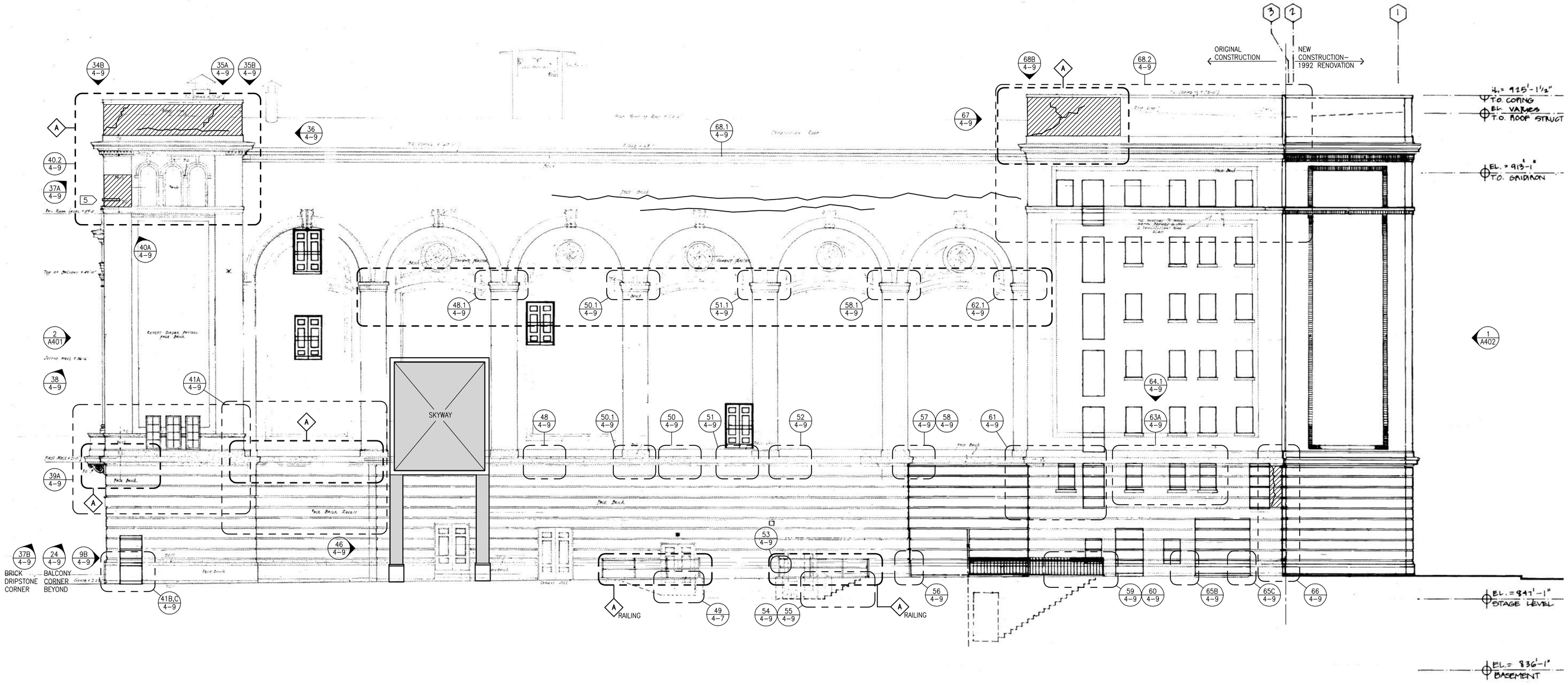

③ HAWTHORNE AVENUE ELEVATION
1/8" = 1'-0"

© copyright hammel green and abrahamson, inc.

orpheum theatre
terra cotta masonry restoration

MCDA
Minneapolis Community Development Agency

REVISION	DATE

HGA
Architecture | Engineering | Planning
Hammel, Green and Abrahamson, Inc.
1201 Harmon Place - Minneapolis, Minnesota USA 55403-1985
Telephone 612.337.4100 Facsimile 612.332.9013

I hereby certify that this plan, specification or report was prepared by me or under my direct supervision and that I am a duly LICENSED ARCHITECT under the laws of the State of Minnesota
name: Gary A. Reetz
signature:

registration number: 11362 date: 05/02/02

project number:	0781-006-25
scale:	1/8" = 1'-0"
date:	10 april 2002
drawn by:	VAL

construction documents

EXTERIOR ELEVATIONS
TERRA COTTA & MASONRY REPAIR SCOPE OF WORK

A401