Preliminary Plan – Subject to Change

EMANUEL HOUSING

822 South 3rd Street
Minneapolis, Minnesota 55415

CONTACTS

OWNER:
RS EDEN

ARCHITECT:
CERMAK RHOADES ARCHITECTS
275 EAST FOURTH STREET, SUITE 800
SAINT PAUL, MN 55101

CHRIS WEGSCHEID, 651 225-8623

GENERAL CONTRACTOR:

CIVIL ENGINEER:
PIERCE PINI
10600 UNIVERSITY AVENUE NE
SUITE 3B
COON RAPIDS, MN 55448

RHONDA PIERCE, 763 537-1311

LANDSCAPE ARCHITECT:
SPENCER JONES LANDSCAPE ARCHITECT
809 IVANHOE DRIVE
NORTHFIELD, MN

SPENCER JONES, 507 645-4188

STRUCTURAL ENGINEER:
MATTSON MACDONALD YOUNG
901 EAST THIRD STREET, SUITE 100
MINNEAPOLIS, MN 55401

DAVE MACDONALD, 612 827-7825

MECHANICAL ENGINEER:
EMANUELSON PODAS
10401 BREN ROAD EAST
MINNETONKA, MN 55343

PM, 952 930-0050

ELECTRICAL ENGINEER:
EMANUELSON PODAS
10401 BREN ROAD EAST
MINNETONKA, MN 55343

PM, 952 930-0050

EET LIST

A0.0 TITLE SHEET & CODE REVIEW
A0.1 ASSEMBLIES

A0.0	*TITLE SHEET*
A0.1	*TYPICAL ASSEMBLIES*
A2.1	*DEMOLITION PLANS*
A2.2	*FLOOR PLAN - BW/BE*
A2.3	*FLOOR PLAN - 1W/1E*
A2.4	*FLOOR PLAN - 2W*
A2.5	*FLOOR PLAN - 3W/2E*
A2.6	*FLOOR PLAN - 4W/3E*
A2.7	*FLOOR PLAN - 5W/4E*
A2.8	*ROOF PLAN AND DETAILS*
A3.1	*INTERIOR ELEVATIONS*
A4.1	*SOUTH AND EAST EXTERIOR ELEVATIONS*
A4.2	*NORTH AND WEST EXTERIOR ELEVATIONS*
A5.1	*BUILDING SECTIONS*
A5.2	*BUILDING SECTIONS*
A6.1	*STAIR AND ELEVATOR PLANS AND SECTIONS*
A7.1	*EXTERIOR DETAILS*
A8.1	*DOOR SCHEDULE AND TYPES*
A8.2	*DOOR DETAILS*
A8.3	*WINDOW SCHEDULE, TYPES, AND FLASHING SEQUENCE*
A8.4	*FINISH SCHEDULE*
A9.1	*INTERIOR DETAILS*

CERMAK RHOADES ARCHITECTS
275 East Fourth Street, Suite 800, St Paul MN 55101
p: 651 225-8623 f: 651 225-8720 www.cermakrhoades.com

I hereby certify that this plan, specification, or report was prepared by me or under my direct supervision and that I am a duly registered Architect under the laws of the State of Minnesota

Signed:

Date: 08/03/11

Reg. No:

NOT FOR CONSTRUCTION

TITLE SHEET

EMANUEL HOUSING

RS EDEN
822 SOUTH 3RD STREET
MINNEAPOLIS, MN 55415

Revisions:

Date issued: 08/03/11

Job No: 0632

A0.0

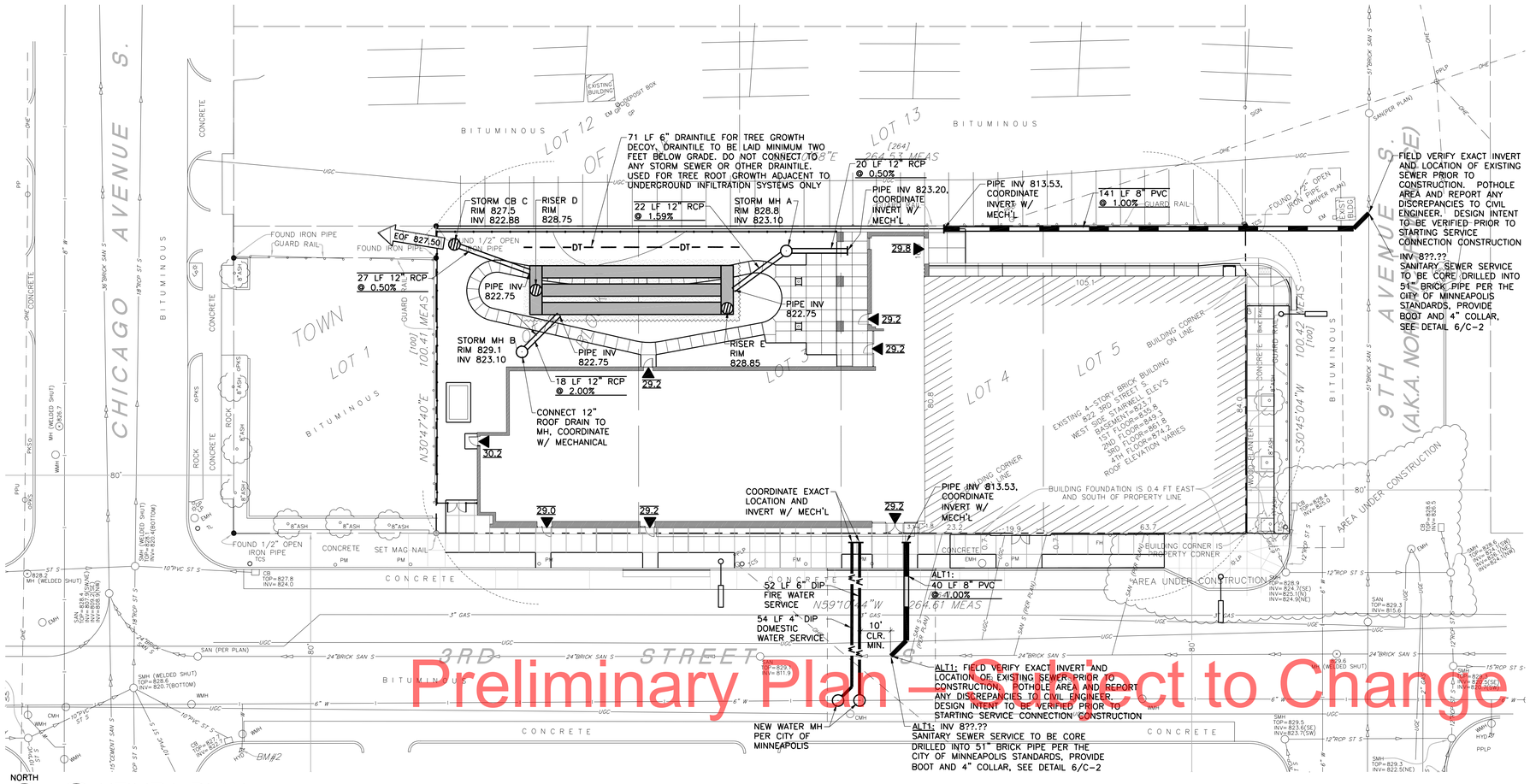

Preliminary Plan – Subject to Change

1 C-1 UTILITY PLAN

0 20' 40' 60'

1"=20'

LEGEND

- PROPERTY LINE
- EXISTING STORM SEWER LINE
- EXISTING CATCH BASIN/MANHOLE
- EXISTING SANITARY SEWER LINE
- EXISTING SANITARY MANHOLE
- EXISTING WATER LINE
- EXISTING WATER MANHOLE
- EXISTING OVERHEAD ELECTRICAL
- EXISTING UNDERGROUND CABLE
- EXISTING POWER POLE
- EXISTING UNDERGROUND ELECTRIC
- EXISTING ELECTRIC MANHOLE
- EXISTING LIGHT POLE
- EXISTING GAS LINE
- EXISTING PARKING METER
- EXISTING TRAFFIC SIGN
- EXISTING TREE
- PROPOSED EGRESS, ELEVATION SHOWN FOR REFERENCE ONLY
- PROPOSED SAWCUT LINE
- PROPOSED STORM SEWER
- PROPOSED SANITARY SEWER
- PROPOSED WATERMAIN
- PROPOSED DRAINTILE
- PROPOSED CATCH BASIN
- PROPOSED MANHOLE
- PROPOSED CLEAN OUT
- PROPOSED HYDRANT
- PROPOSED GATE VALVE
- PROPOSED FIRE DEPARTMENT CONNECTION
- PROPOSED IMPERMEABLE LINER AROUND INFILTRATION SYSTEM

NOTES

1. ALL EXISTING INFORMATION TAKEN FROM SURVEY BY SUNDE LAND SURVEYING, LLC. DATED MAY 13, 2011.
2. SUBSURFACE GEOTECHNICAL INVESTIGATION BY AMERICAN ENGINEERING TESTING, INC. PROJECT NUMBER 01-04711, DATED DECEMBER 14, 2009.
3. CONTRACTOR TO FIELD VERIFY ALL EXISTING CONDITIONS INCLUDING LOCATIONS OF EXISTING UTILITIES, AND NOTIFY ENGINEER OF ANY DISCREPANCIES PRIOR TO STARTING CONSTRUCTION.
4. CONTRACTOR TO PREVENT DIRT AND/OR DEBRIS FROM ENTERING STORM SEWER OR BEING TRANSPORTED OFF-SITE IN AN UNCONTROLLED MANNER. CONTRACTOR TO VERIFY AT PROJECT CLOSEOUT THAT STORM SEWER SYSTEM IS CLEAR OF SEDIMENT AND/OR DEBRIS AND IS FULLY FUNCTIONAL.
5. ALL AREAS DISTURBED BY CONSTRUCTION WHICH ARE OUTSIDE THE LIMITS OF PAVING ARE TO BE RESTORED AND REVEGETATED.
6. ALL UTILITY DEMOLITION AND/OR ABANDONMENT TO BE PERFORMED IN ACCORDANCE WITH CITY OF MINNEAPOLIS AND STATE OF MINNESOTA REGULATIONS AND STANDARDS.
7. EXISTING UTILITIES ARE SHOWN IN THEIR APPROXIMATE LOCATIONS. CONTRACTOR TO FIELD VERIFY THE LOCATION OF ALL EXISTING UTILITIES WHICH MAY INCLUDE BUT IS NOT LIMITED TO: ELECTRIC, TELEPHONE, GAS, CABLE TV, COMPUTER CABLE, FIBER OPTIC CABLE, SANITARY SEWER, STORM SEWER AND WATERMAIN. CONTRACTOR TO CONTACT GOPHER ONE-CALL BEFORE EXCAVATING.
8. ALL EXISTING UTILITIES AND OTHER IMPROVEMENTS ARE TO REMAIN UNLESS NOTED OTHERWISE.
9. CONTRACTOR TO PROTECT FROM DAMAGE ALL EXISTING IMPROVEMENTS, LANDSCAPING, STRUCTURES AND UTILITIES THAT ARE TO REMAIN. CONTRACTOR TO REPAIR ANY DAMAGE AT OWN EXPENSE.
10. ALL WORK TO CONFORM WITH CITY OF MINNEAPOLIS AND STATE OF MINNESOTA STANDARDS AND REGULATIONS.
11. CONTRACTOR SHALL OBTAIN ALL REQUIRED PERMITS PRIOR TO STARTING CONSTRUCTION.
12. WASTE MATERIALS INCLUDING PAVEMENT REMOVED DURING CONSTRUCTION, WASTE PIPING AND SUPPLIES, CONSTRUCTION DEBRIS AND EXCESS EXCAVATED MATERIAL SHALL BECOME THE PROPERTY OF THE CONTRACTOR AND SHALL BE REMOVED FROM THE PROJECT SITE AND DISPOSED OF PROPERLY BY THE CONTRACTOR.
13. ALL MATERIALS FOR PROPOSED CONSTRUCTION OR REPAIR OF EXISTING FACILITIES SHALL BE NEW PRODUCTS DIRECT FROM THE FACTORY AND FREE FROM DEFECTS.
14. CONTRACTOR SHALL NOT BLOCK DRAINAGE FROM OR DIRECT EXCESS DRAINAGE ONTO ADJACENT PROPERTY.
15. ADEQUATE DRAINAGE SHALL BE MAINTAINED AT ALL TIMES DURING CONSTRUCTION AND ANY DRAINAGE DITCH OR STRUCTURE DISTURBED DURING CONSTRUCTION SHALL BE RESTORED TO THE SATISFACTION OF THE OWNING AUTHORITY. ALL CONSTRUCTION STORM RUNOFF SHALL COMPLY WITH THE NATIONAL POLLUTANT DISCHARGE ELIMINATION SYSTEM (NPDES) REQUIREMENTS.
16. WHEN WORKING AROUND EXISTING UTILITIES THAT BECOME EXPOSED, THE CONTRACTOR SHALL PROVIDE SUFFICIENT SUPPORT TO PREVENT EXCESSIVE STRESS ON THE PIPING. THE CONTRACTOR IS FULLY RESPONSIBLE FOR ANY DAMAGES CAUSED BY FAILURE TO EXACTLY LOCATE AND PRESERVE THESE UNDERGROUND FACILITIES.
17. PROVIDE SHORING AROUND TREES WHEN INSTALLING PROPOSED UTILITY SERVICES AND REMOVING EXISTING SERVICES.
18. DRAWINGS DO NOT INDICATE AREAS OF TEMPORARY SUPPORT SYSTEMS. THE CONTRACTOR IS RESPONSIBLE FOR ALL MEANS AND METHODS AND WILL HAVE TOTAL CONTROL OVER THE TYPES AND DESIGN OF ALL SHORING, SHEETING, BRACING, ANCHORAGES, EXCAVATION SUPPORT WALLS, DIRECTIONAL BORING, AUGER JACKING, SOIL STABILIZATION AND OTHER METHODS OF PROTECTING EXISTING IMPROVEMENTS. SEE SPECIFICATIONS FOR SUBMITTAL REQUIREMENTS.

CONSTRUCTION SEQUENCING AND INSPECTION OF EROSION AND SEDIMENT CONTROL PRACTICES FOR STORMWATER MANAGEMENT SYSTEMS

A. OBTAIN EROSION CONTROL PERMIT FROM CITY OF MINNEAPOLIS, INSTALL SILT FENCE AND TREE PROTECTION ALONG PERIMETER OF SITE. INSTALL EROSION CONTROL INSERTS AT ALL CATCHBASINS AND MANHOLES AND CONSTRUCT ROCK CONSTRUCTION ENTRANCE.

B. INSTALL EROSION CONTROL AND TREE PROTECTION ALONG PERIMETER OF SITE. INSTALL EROSION CONTROL INSERTS AT ALL CATCHBASINS AND MANHOLES AND CONSTRUCT ROCK CONSTRUCTION ENTRANCE. SEE EROSION CONTROL NOTES FOR FURTHER INSTRUCTION.

C. PROCEED WITH SITE DEMOLITION, GRADING AND CONSTRUCTION.

D. MAINTAIN EROSION CONTROL BMP'S AND CONTROL RUNOFF REQUIREMENTS AS OUTLINED ON DRAWING AND WITHIN SWPPP.

E. ALL SITE WORK SHOULD BE COMPLETE PRIOR TO WORK ON THE INFILTRATION AREAS BEING STARTED TO THE EXTENT POSSIBLE. IF CONSTRUCTION OF THESE AREAS NEEDS TO OCCUR PRIOR TO FINAL SITE STABILIZATION, THEN THE CONSTRUCTED AREA MUST BE PROTECTED AND CONTRIBUTING FLOWS NEED TO BE FILTERED TO PREVENT CLOGGING OF THE SYSTEM OR COMPACTION OF THE INFILTRATION AREA.

F. SHOP DRAWINGS OF ALL SYSTEMS NEED TO BE APPROVED PRIOR TO CONSTRUCTION. ALL SOIL MATERIAL TESTING SHALL BE DONE PRIOR TO INSTALLATION TO ENSURE SOIL MIXTURE IS ADEQUATE FOR INFILTRATION. TESTS SHALL BE SUBMITTED TO ENGINEER AND APPROVED PRIOR TO INSTALLATION. SPECIFICATIONS INDICATE MATERIALS REQUIRED FOR EACH SYSTEM.

G. NOTIFY CIVIL ENGINEER AND UNIVERSITY OF MINNESOTA OF WORK BEING DONE ON STORMWATER SYSTEMS AND THE SCHEDULE OF CONSTRUCTION. ALLOW A MINIMUM OF FIVE WORKING DAYS FOR NOTIFICATION, SO ENGINEER CAN CONDUCT SITE MEETING TO DISCUSS THE INTENT OF THE SYSTEM AND SO CONSTRUCTION OBSERVATION CAN BE SCHEDULED ACCORDINGLY. SITE MEETING TO REVIEW THE INTENT OF THE DESIGN AND THE CONSTRUCTION OF THE INFILTRATION SYSTEM NEEDS TO OCCUR PRIOR TO STARTING CONSTRUCTION ON THE SYSTEM.

H. ALL SOIL MATERIAL TESTING SHALL BE DONE PRIOR TO INSTALLATION OF THE INFILTRATION SYSTEM TO ENSURE SUBGRADE SOILS MEET MINIMUM INFILTRATION RATE OF 0.20 INCHES PER HOUR.

I. REMOVE ANY CLAY MATERIALS BELOW BOTTOM OF INFILTRATION AREA. CONTRACTOR SHALL HAVE GEOTECHNICAL ENGINEER ON SITE TO VERIFY CLAY MATERIAL WITHIN PAVER AREA HAS BEEN REMOVED. BACKFILL WITH CLEAN SELECT GRANULAR BACKFILL PER MNDOT SPECIFICATION 3149.2 B2 MODIFIED SO LESS THAN 5% PASSES THE #200 SIEVE. CONTRACTOR TO SUBMIT MATERIAL TESTING REPORTS TO ENGINEER PRIOR TO PIPE AND ROCK INSTALLATION.

J. CONTRACTOR TO COORDINATE GEOTECHNICAL ENGINEER TO CONDUCT FLOOD TEST TO MEASURE SUBGRADE INFILTRATION RATE TO ENSURE SUBGRADE MEETS MINIMUM INFILTRATION RATE OF 0.20 INCHES PER HOUR. SEE NOTE #H.

K. SCARIFY 12" OF THE EXISTING SUBGRADE WITHIN INFILTRATION AREAS TO PROMOTE INFILTRATION OF STORMWATER INTO UNDERLYING SUBGRADE SOILS.

L. MAINTAIN EROSION AND SEDIMENT CONTROL ON CONTRIBUTING AREAS TO AVOID CLOGGING OF SYSTEM.

M. CONSTRUCT STORMWATER SYSTEMS PER DRAWINGS AND SPECIFICATIONS.

N. COMPLETE CONSTRUCTION OF PARKING AND SIDEWALKS AFTER STORMWATER SYSTEM IS INSTALLED. AFTER PAVEMENT IS INSTALLED, VERIFY THAT INFILTRATION SYSTEMS ARE CLEAR AND FULLY FUNCTIONAL. VACUUM AND CLEAN SYSTEMS AS NEEDED SO THEY ARE FULLY FUNCTIONAL AT PROJECT CLOSEOUT.

O. INSTALL LANDSCAPING AND PLANTING MATERIALS PER LANDSCAPE DRAWINGS AND SPECIFICATIONS.

P. REMOVE ALL TEMPORARY EROSION CONTROL BMP'S AFTER PAVING AND INFILTRATION AREAS ARE COMPLETE AND AFTER TURF HAS BEEN ESTABLISHED.

Q. CONTRACTOR SHALL TAKE PHOTOGRAPHS AND MEASUREMENTS OF ALL STORMWATER MANAGEMENT SYSTEMS THROUGHOUT CONSTRUCTION. DOCUMENTATION OF CONSTRUCTION SHALL BE SUBMITTED TO THE CIVIL ENGINEER AT THE CLOSEOUT OF THE PROJECT. CLOSEOUT DOCUMENTATION SHALL INCLUDE PHOTOGRAPHS AND MEASUREMENTS OF SYSTEM DURING CONSTRUCTION, TESTING REPORTS AND OBSERVATIONS AND REDLINE DRAWINGS OF ANY FIELD MODIFICATIONS MADE DURING CONSTRUCTION.

R. A LETTER WRITTEN ON COMPANY LETTERHEAD THAT THE STORMWATER MANAGEMENT PRACTICES HAVE BEEN BUILT PER THE CIVIL PLANS, OR PER REDLINE FIELD DRAWINGS, SHALL BE SUBMITTED TO THE CIVIL ENGINEER AT THE CLOSEOUT OF THE PROJECT.

S. THE CONTRACTOR SHALL SUBMIT AN AS-BUILT SURVEY OF THE COMPLETED SITE PREPARED AND SIGNED BY A LICENSED SURVEYOR TO THE CIVIL ENGINEER AT THE END OF THE PROJECT. AS-BUILT SURVEY SHALL INCLUDE ENOUGH INFORMATION TO VERIFY THE CONSTRUCTED TOPOGRAPHY, UTILITY AND SITE ELEMENTS. COORDINATE WITH OWNER AND CIVIL ENGINEER FOR SCHEDULE FOR WHEN THIS SHALL BE COMPLETED.

T. REMOVE ALL TEMPORARY EROSION CONTROL BMP'S AFTER PAVING AND INFILTRATION AREAS ARE COMPLETE AND AFTER TURF HAS BEEN ESTABLISHED.

CERMAK RHOADES ARCHITECTS
275 East Fourth Street, Suite 800, St. Paul, MN 55101
p 651-225-8823 f 651-225-8728 www.cermakrhoades.com

I hereby certify that this plan, specification, or report was prepared by me or under my direct supervision and that I am a duly licensed Engineer under the laws of the State of Minnesota.

Signed

RHONDA S. PIERCE

DATE

REG. NO. 41333

PIERCE PINI & ASSOCIATES
10600 UNIVERSITY AVE NW, SUITE 3B
COON RAPIDS, MN 55448
TEL 763.537.1311
FAX 763.537.1354

UTILITY PLAN

EMANUEL HOUSING
822 3RD STREET SOUTH
MINNEAPOLIS, MINNESOTA

REVISIONS	
A. CITY SUBMITTAL	6/20/11
B. CITY SUBMITTAL	8/03/11

DATE ISSUED	8/03/11
JOB NO.	11020
FILE NAME	

C-1

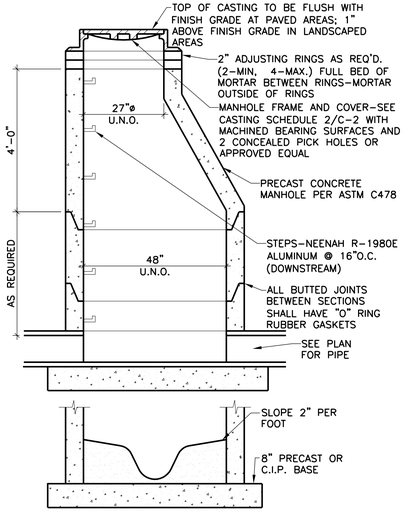

NOTES:
1. MANHOLES 8' OR DEEPER – THE PRECAST SECTION IMMEDIATELY BELOW THE CONCRETE SECTION SHALL BE 1'-0" HIGH.
2. PROVIDE STEPS IN MANHOLES OVER 4-0" IN DEPTH.
3. REINFORCING SHALL BE A MINIMUM OF A SINGLE LINE WIRE FABRIC HAVING AN AREA OF NOT LESS THAN 0.12 SQ. IN. PER FOOT OF HEIGHT.
4. PROVIDE SNAP-IN BOOT AT ALL SANITARY SEWER CONNECTIONS TO MANHOLES.
5. ALL STORM SEWER PIPING RUNS SHALL USE RESILIENT RUBBER JOINTS AT PIPE CONNECTIONS TO CATCH BASINS FOR WATERTIGHT CONNECTION PER PLUMBING CODE.

1 C-2 STANDARD SEWER MANHOLE — NO SCALE

CASTING SCHEDULE		
CATCH BASIN/MANHOLE	GRATE TYPE (NEENAH)	REMARKS
A,B	R-1642-A	STORM MH
C,D,E	R-2561-A	BEEHIVE

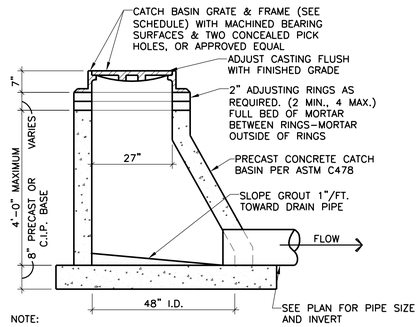

NOTE:
1. REINFORCING SHALL BE A MINIMUM OF A SINGLE LINE WIRE FABRIC HAVING AN AREA OF NOT LESS THAN 0.12 SQ. IN. PER FOOT OF HEIGHT.
2. ALL STORM SEWER PIPING RUNS SHALL USE RESILIENT RUBBER JOINTS AT PIPE CONNECTIONS TO CATCH BASINS FOR WATERTIGHT CONNECTION PER PLUMBING CODE.

2 C-2 SHALLOW CATCH BASIN — NO SCALE

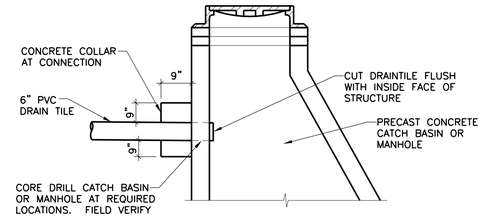

NOTE:
1. ALL STORM SEWER PIPING RUNS SHALL USE RESILIENT RUBBER JOINTS AT PIPE CONNECTIONS TO CATCH BASINS FOR WATERTIGHT CONNECTION PER PLUMBING CODE.

3 C-2 DRAINTILE TO CB/MH CONNECTION — NO SCALE

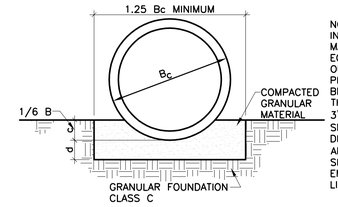

NOTE: THE PIPE IS BEDDED IN COMPACTED GRANULAR MATERIAL UP TO A HEIGHT EQUAL TO ONE SIXTH THE OUTSIDE DIAMETER OF THE PIPE. THE DEPTH OF THE BEDDING MATERIAL BELOW THE PIPE IS A MINIMUM OF 3" FOR 27" DIAMETER AND SMALLER PIPE, 6" FOR 66" DIAMETER AND LARGER PIPE, AND 4" FOR INTERMEDIATE SIZES. THE REMAINING EMBANKMENT MATERIAL IS LIGHTLY COMPACTED.

5 C-2 CLASS C PIPE BEDDING — NO SCALE

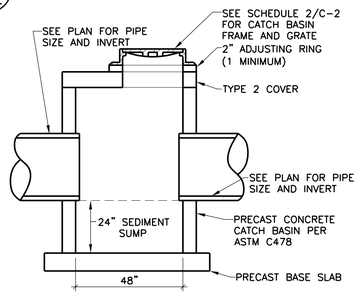

NOTE:
PROVIDE AT CATCHBASINS
REMOVE SEDIMENT FROM SUMP ONCE EVERY 2 MONTHS

4 C-2 CB WITH SEDIMENT SUMP — NO SCALE

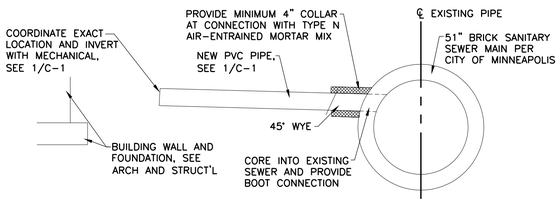

NOTE: CONNECTION TO CITY SANITARY SEWER PER CITY OF MINNEAPOLIS STANDARDS AND REQUIREMENTS. COORDINATE EXACT DETAIL WITH CITY

6 C-2 SANITARY SEWER SERVICE — NO SCALE

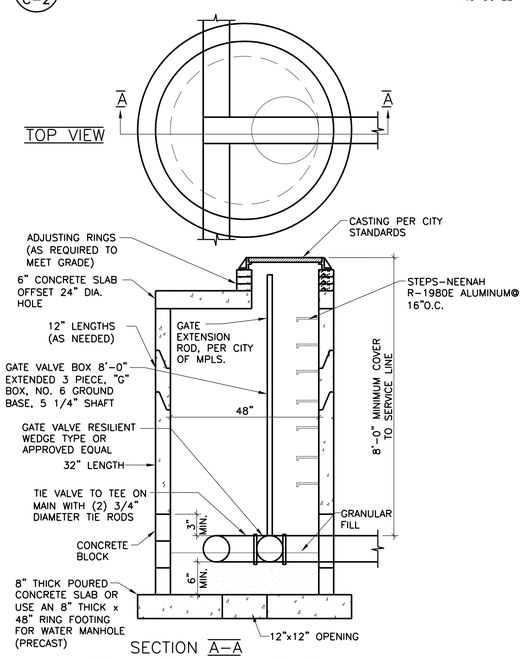

WET TAP MANHOLE INSTALLATION – TYP.

7 C-2 NOTE: SEE CITY OF MINNEAPOLIS STANDARDS — NO SCALE

Preliminary Plan – Subject to Change

CERMAK RHOADES ARCHITECTS
275 East Fourth Street, Suite 800, St. Paul, MN 55101
p 651-225-8623 f 651-225-8728 www.cermakrhoades.com

I hereby certify that this plan, specification, or report was prepared by me or under my direct supervision and that I am a duly licensed Engineer under the laws of the State of Minnesota.

Signed

RHONDA S. PIERCE

DATE

REG. NO. 41333

PIERCE PINI & ASSOCIATES
10600 UNIVERSITY AVE NW, SUITE 3B
COON RAPIDS, MN 55448
TEL 763.537.1311
FAX 763.537.1354

CIVIL DETAILS

EMANUEL HOUSING
822 3RD STREET SOUTH
MINNEAPOLIS, MINNESOTA

REVISIONS	
A. CITY SUBMITTAL	6/20/11
B. CITY SUBMITTAL	8/03/11

DATE ISSUED	8/03/11
JOB NO.	11020
FILE NAME	

C-2

SURVEY LEGEND

BM	Denotes bench mark	OHE	Denotes overhead electric line
CONC	Denotes concrete surface	OHU	Denotes overhead utility line
CB	Denotes catch basin	OD	Denotes overhead door
EM	Denotes electric meter	PEP	Denotes polyethylene pipe
G	Denotes gutter	PKS	Denotes parking sign
GAS	Denotes underground gas	PP	Denotes power pole
GW	Denotes guy wire	PPLP	Denotes power and light pole
HCR	Denotes handicap ramp	PPU	Denotes power and utility pole
HYD	Denotes fire hydrant	PVC	Denotes polyvinylchloride pipe
INV	Denotes structure invert	RCP	Denotes reinforced concrete pipe
LA	Denotes landscaped area	SAN	Denotes sanitary manhole
MH	Denotes manhole	SAN S	Denotes sanitary sewer
		SMH	Denotes storm manhole
		ST S	Denotes storm sewer
		TC	Denotes top of concrete curb
		TCS	Denotes traffic control sign
		TRANS	Denotes transformer box
		UGC	Denotes underground communication line
		UGE	Denotes underground electric line
		VCP	Denotes vitrified clay pipe
		W	Denotes water line
		WMH	Denotes water manhole

surveyor notes:

BENCHMARKS
(Based on Minneapolis Monument CIM #108 A Elevation = 798.42 feet for datum)
1.) Top of top nut of fire hydrant; located at the most northerly corner of the property. Elevation = 813.87 feet
2.) Top of top nut of fire hydrant; located at the southeast corner of the property. Elevation = 819.79 feet

1.) Location and sizes of underground utilities shown hereon are approximate only and are shown based on field location of visible fixtures in combination with available data provided by various sources. Some underground utility locations are shown as marked onsite by those utility companies whose locators responded to our Gopher State One Call, ticket number 100606462. Utilities shown are dependent on the completeness and accuracy of data provided. Other underground utilities of which we are unaware may exist. Verify all utilities critical to construction or design.

2.) Contact GOPHER STATE ONE CALL at 651-454-0002 (800-252-1166) for precise onsite location of utilities prior to any excavation.

3.) Survey coordinate & bearing basis: Hennepin County System

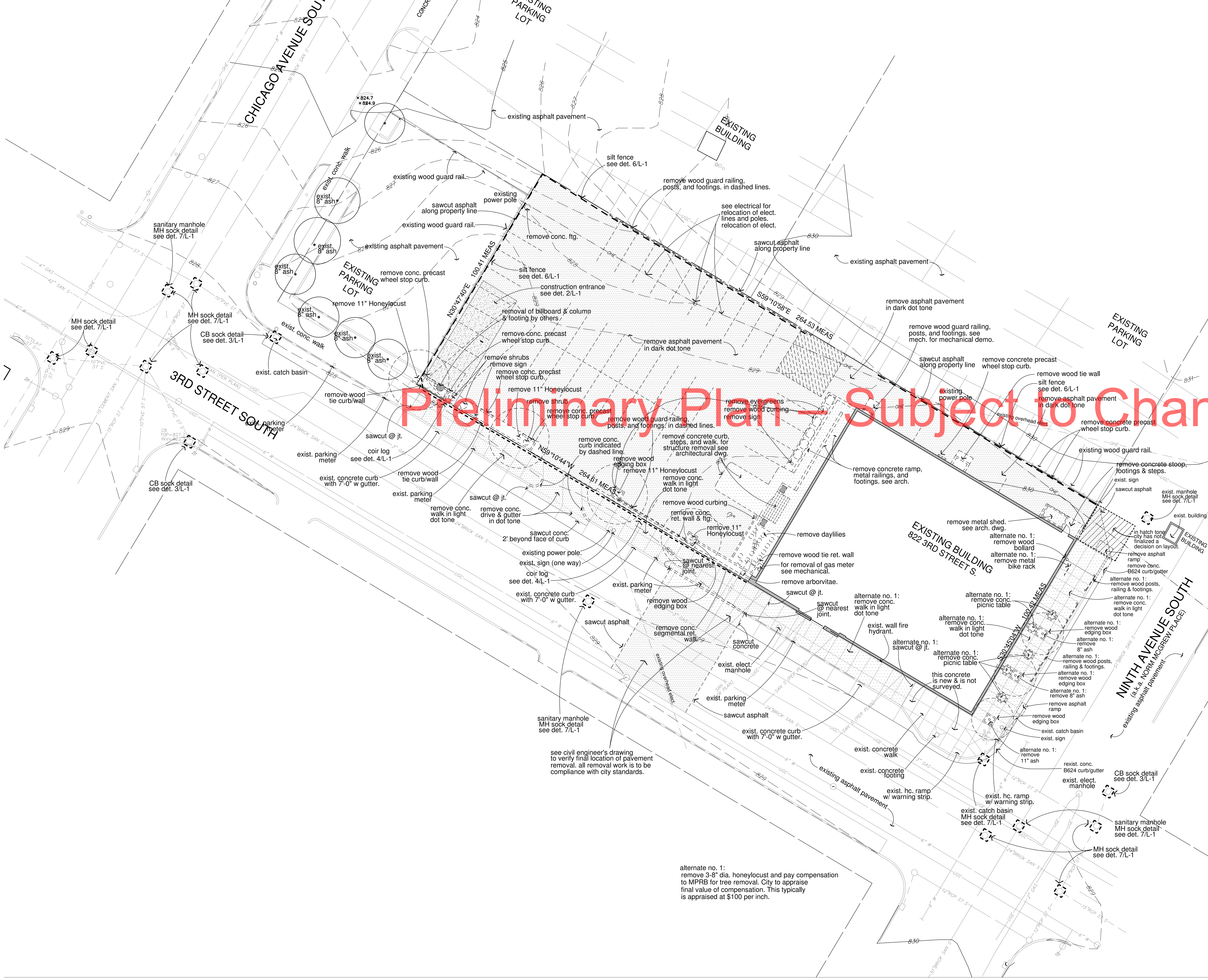

Minneapolis Standard Erosion Control Notes:

1. CONTRACTOR MUST CALL FOR A PRE-CONSTRUCTION MEETING 48 HOURS PRIOR TO ANY LAND DISTURBANCES.
2. 612-673-3867. FAILURE TO DO SO MAY RESULT IN THE REVOCATION OF PERMIT AND A STOP WORK ORDER BEING ISSUED.
3. INSTALL PERIMETER EROSION CONTROL AT THE LOCATIONS SHOWN ON THE PLANS PRIOR TO THE COMMENCEMENT OF ANY LAND DISTURBANCE OR CONSTRUCTION ACTIVITIES.
4. BEFORE BEGINNING CONSTRUCTION, INSTALL TEMPORARY ROCK CONSTRUCTION ENTRANCE AT EACH POINT WHERE VEHICLES EXIT THE CONSTRUCTION SITE. USE 2-INCH OR GREATER DIAMETER ROCK IN A LAYER AT LEAST 6-INCHES THICK ACROSS THE ENTIRE WIDTH OF THE ENTRANCE. EXTEND THE ROCK ENTRANCE AT LEAST 50 FEET INTO THE CONSTRUCTION ZONE USING A GEO-TEXTILE FABRIC BENEATH THE AGGREGATE TO PREVENT MIGRATION OF SOIL INTO THE ROCK FROM BELOW.
5. REMOVE ALL SOILS AND SEDIMENTS TRACKED OR OTHERWISE DEPOSITED ONTO PUBLIC AND PRIVATE PAVEMENT AREAS. REMOVAL SHALL BE ON A DAILY BASIS WHEN TRACKING OCCURS AND MAY BE ORDERED BY MINNEAPOLIS INSPECTORS AT ANY TIME IF CONDITIONS WARRANT. SWEEPING SHALL BE MAINTAINED THROUGHOUT THE DURATION OF THE CONSTRUCTION AND DONE IN A MANNER TO PREVENT DUST BEING BLOWN TO ADJACENT PROPERTIES.
6. INSTALL INLET PROTECTION AT ALL PUBLIC AND PRIVATE CATCHBASIN INLETS WHICH RECEIVE RUNOFF FROM DISTURBED AREAS. CATCH BASIN INSERTS OR OTHER APPROVED PRODUCT ARE REQUIRED IN UNDISTURBED AREAS THAT RECEIVE RUNOFF FROM THE PROJECT AREA. HAY BALES OR FILTER FABRIC WRAPPED THE GRATES ARE NOT ALLOWED FOR INLET PROTECTION.
7. LOCATE SOIL OR DIRT STOCKPILES NO LESS THAN 25 FEET FROM ANY PUBLIC OR PRIVATE ROADWAY OR DRAINAGE CHANNEL. IF REMAINING FOR MORE THAN 7 DAYS, STABILIZE THE STOCKPILES BY MULCHING, VEGETATIVE COVER, TARPS, OR OTHER MEANS. CONTROL EROSION FROM ALL STOCKPILES BY PLACING SILT BARRIERS AROUND THE PILES. TEMPORARY STOCKPILES LOCATED ON PAVED SURFACES MUST BE NO LESS THAN 2 FEET FROM THE DRAINAGE/GUTTER LINE AND SHALL BE COVERED IF LEFT FOR MORE THAN 24 HOURS.
8. MAINTAIN ALL TEMPORARY EROSION AND SEDIMENT CONTROL DEVICES IN PLACE UNTIL THE CONTRIBUTING DRAINAGE AREA HAS BEEN STABILIZED. INSPECT TEMPORARY EROSION AND SEDIMENT CONTROL DEVICES ON A DAILY BASIS AND REPLACE DETERIORATED, DAMAGED, OR ROTTED EROSION CONTROL DEVICES IMMEDIATELY.
9. TEMPORARILY OR PERMANENTLY STABILIZE ALL CONSTRUCTION AREAS WHICH HAVE UNDERGONE FINAL GRADING, AND ALL AREAS IN WHICH GRADING OR SITE BUILDING CONSTRUCTION OPERATIONS ARE NOT ACTIVELY UNDERWAY AGAINST EROSION DUE TO RAIN, WIND, AND RUNNING WATER WITHIN 7-14 DAYS. USE SEED AND MULCH, EROSION CONTROL MATTING, AND/OR SODDING AND STAKING IN GREEN SPACES. AN EARLY APPLICATION OF GRAVEL BASE ON AREAS TO BE PAVED IS RECOMMENDED FOR MINIMIZING EROSION POTENTIAL.
10. REMOVE ALL TEMPORARY SYNTHETIC, STRUCTURAL, NON-BIODEGRADABLE EROSION AND SEDIMENT CONTROL DEVICES AFTER THE SITE HAS UNDERGONE FINAL STABILIZATION AND PERMANENT VEGETATION ESTABLISHMENT. FINAL STABILIZATION FOR PURPOSES OF THIS REMOVAL IS 70% ESTABLISHED COVER OVER DENUDED AREA.
11. READY MIX CONCRETE AND CONCRETE BATCH PLANTS ARE PROHIBITED WITHIN THE PUBLIC RIGHT-OF-WAY. ALL CONCRETE RELATED PRODUCTION, CLEANING, AND MIXING ACTIVITIES SHALL BE DONE IN THE DESIGNATED CONCRETE MIXING/WASHOUT LOCATIONS AS SHOWN IN THE EROSION CONTROL PLAN. UNDER NO CIRCUMSTANCES MAY WASHOUT WATER DRAIN ONTO THE PUBLIC RIGHT-OF-WAY OR INTO THE PUBLIC OR PRIVATE STORM DRAIN CONVEYANCE.
12. CHANGES TO APPROVED EROSION CONTROL PLAN MUST BE APPROVED BY THE EROSION CONTROL IINSPECTOR PRIOR TO IMPLEMENTATION. CONTRACTOR TO PROVIDE INSTALLATION AND DETAILS FOR ALL PROPOSED ALTERNATE TYPE DEVICES.

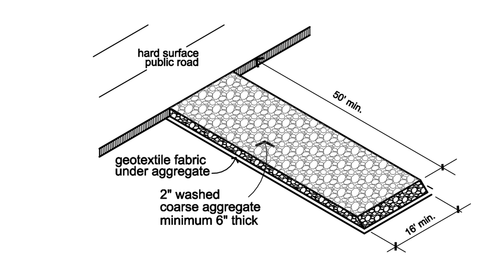

2 L-1 rock construction entrance
no scale

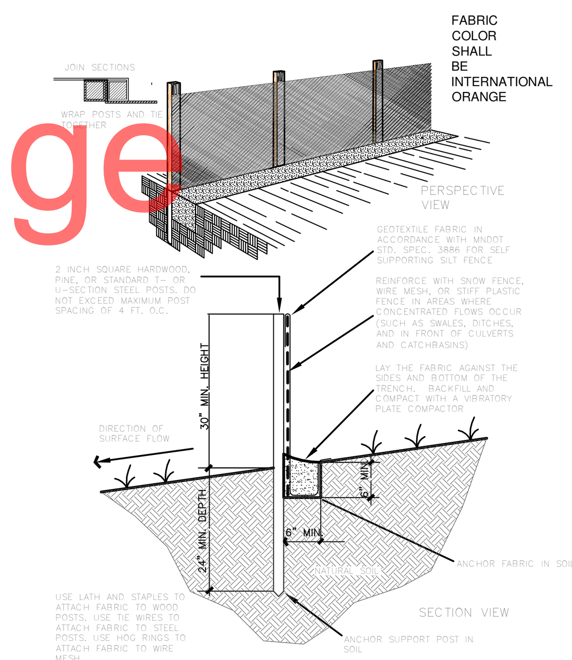

6 L-1 silt fence detail
no scale

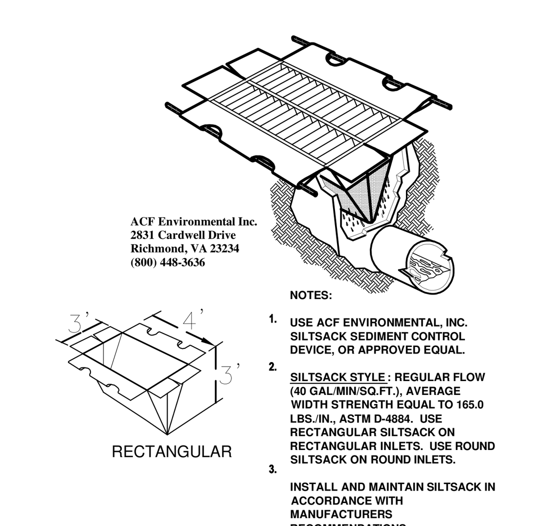

3 L-1 catch basin inlet protection detail
no scale

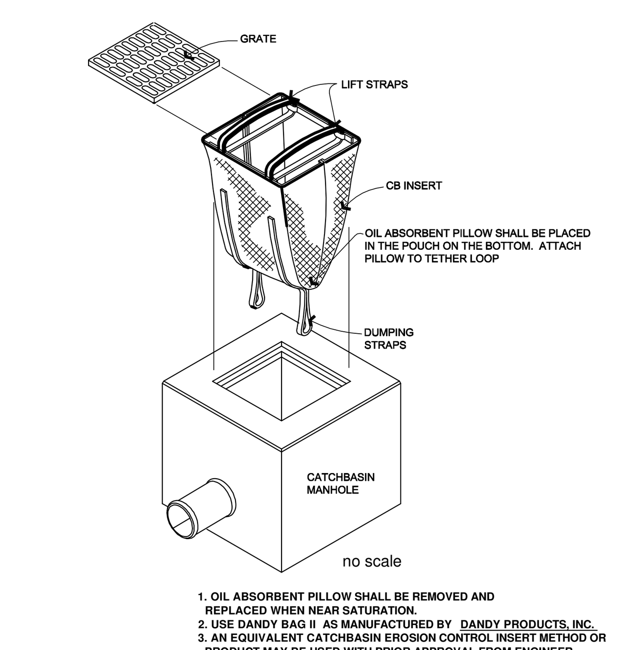

7 L-1 catch basin insert erosion control detail

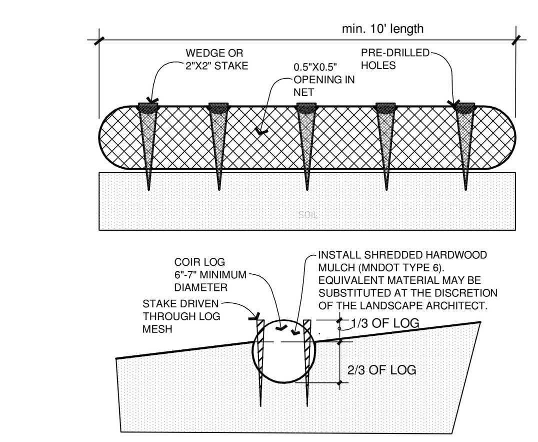

4 L-1 typical coir log
no scale

erosion control notes:

1. INSTALL EROSION CONTROL AT ALL AD,CB, OR MH WITHIN THE PROJECT AND DRAINAGE AREA DOWNSTREAM OF OF PROJECT, TYPICAL INCLUDING STRUCTURES NOT SHOWN ON PLAN. SEE CIVIL DRAWINGS.

site clearing & erosion control plan

scale:1" to 20'-0"

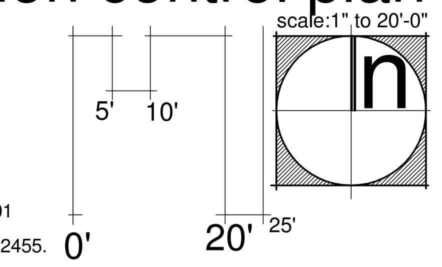

demolition

1. Remove all items indicated to be removed and cart off-site. Cut down trees and grub-out roots of all trees indicated to be
2. Verify all utilities, service lines, and other buried structures with appropriate authority prior to
3. Refer to site layout plan for notes and dimensions for asphalt and concrete removal.
4. Protect all trees from damage unless specifically noted to be removed.
5. Cart off site all signs to be removed.
6. Survey by Sunde Land Surveying, 9001 East Bloomington Freeway, suite 118, Bloomington, Minnesota, tel. 952-881-2455.

CERMAK RHOADES ARCHITECTS
275 East Fourth Street, Suite 800, St. Paul, MN 5510 1
p 651.225.8623 f 651.225.8720 www.cermakrhoades.com

I hereby certify that this plan, specification, or report was prepared by me or under my direct supervision and that I am a duly registered Landscape Architect under the laws of the State of Minnesota.

Signed

spencer jones

DATE: 20 JUNE 2011

REG. NO. 15137

spencer jones
landscape architect
809 ivanhoe drive
northfield 5 5 0 5 mn
t. 507-645-4188 f. 507-645-8268

city submittal

SITE CLEARING PLAN
EMMANUEL HOUSING
822 3RD STREET SOUTH
MINNEAPOLIS, MINNESOTA

REVISIONS	
3 AUGUST 2011	
DATE ISSUED	20 JUNE 2011
JOB NO.	
FILE NAME	

L-1

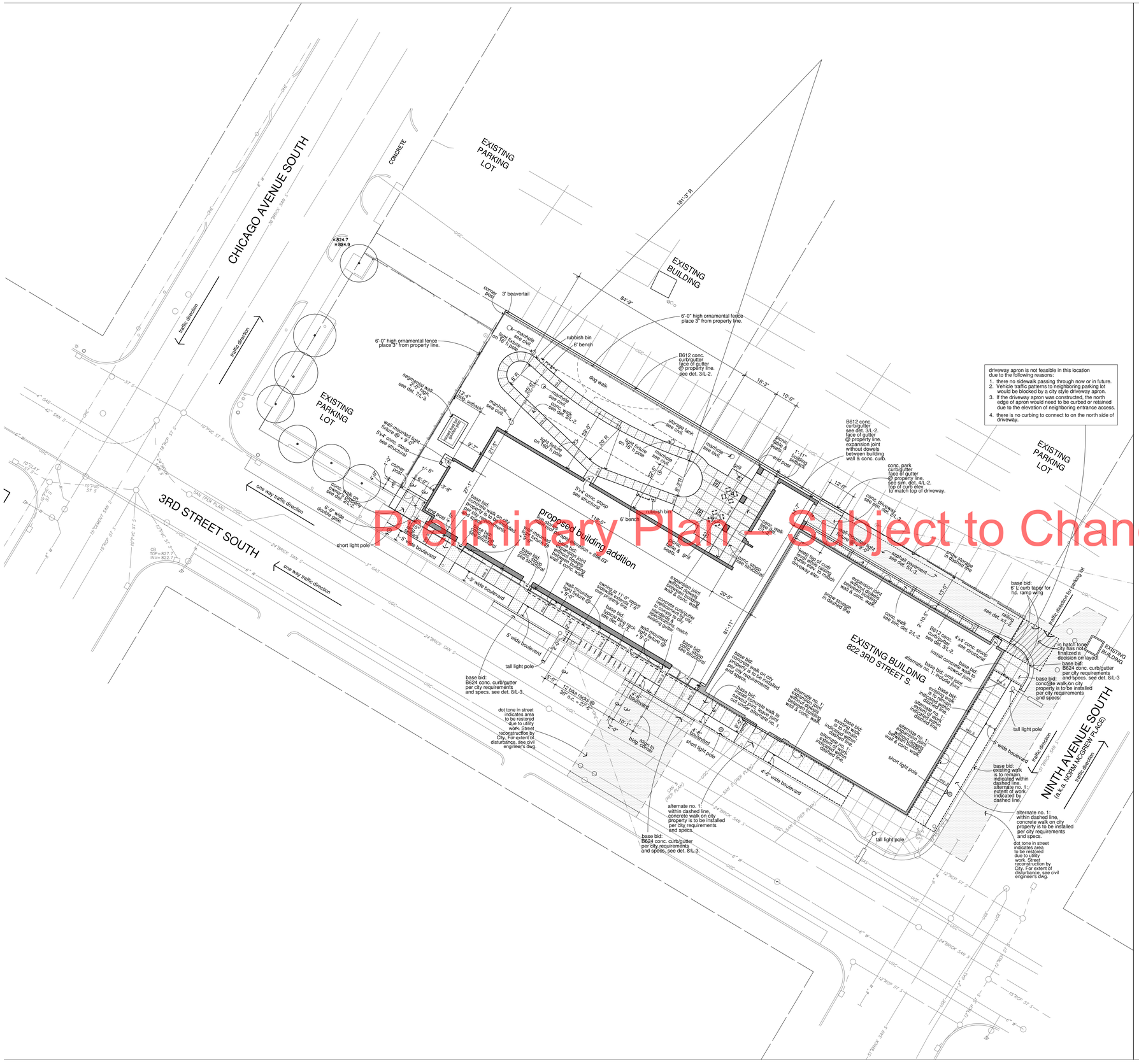

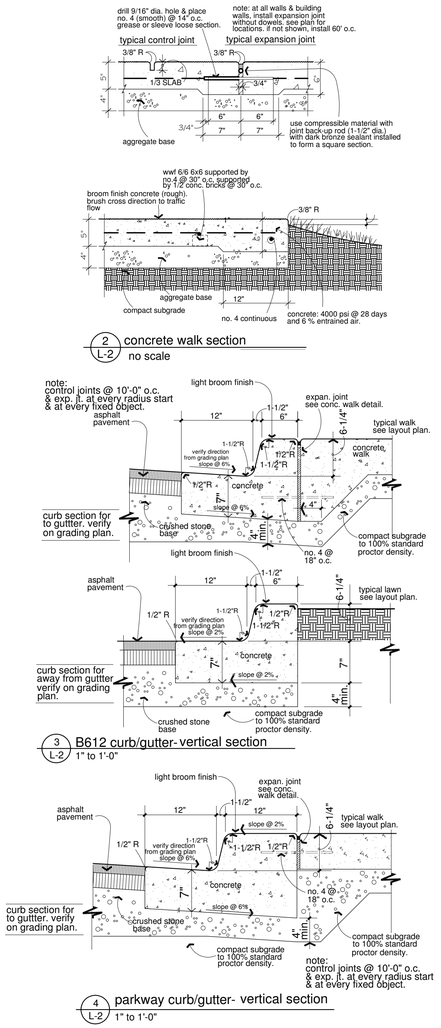

CITY SIDEWALK STANDARDS:

1. ALL CONCRETE WORK OUTSIDE OWNER'S PROPERTY LINE AND UNDER CITY JURISDICTION, SHALL COMPLY WITH THE MINNEAPOLIS PUBLIC WORKS MANUAL TITLED "SPECIFICATIONS FOR MONOLITHIC CONCRETE SIDEWALK, CONCRETE DRIVEWAYS, CONCRETE CURBING & GUTTER, CONCRETE ALLEYS FOR 2011". THE LIST OF CITY APPROVED CONTRACTORS TO DO THIS WORK IS FOUND IN THE APPENDIX OF THE PROJECT MANUAL.
2. A LICENSED AND BONDED CONCRETE CONTRACTOR MUST PERFORM ANY CONCRETE CONSTRUCTION WORK WITHIN THE PUBLIC RIGHT OF WAY.
3. A "$10,000 SIDEWALK CONTRACTOR'S BOND" IS REQUIRED TO BE FILED WITH THE PUBLIC WORKS SIDEWALK.
4. INSPECTIONS OFFICE: CALL PUBLIC WORKS SIDEWALK INSPECTIONS, (612) 673-2420 FOR FURTHER INFORMATION.
5. CONTACT THE LICENSES AND CONSUMER SERVICES DIV. OF REGULATORY SERVICES, (612) 673-2080 FOR FURTHER INFORMATION REGARDING LICENSING REQUIREMENTS.
6. THE CONCRETE CONTRACTOR MUST OBTAIN A "SIDEWALK CONSTRUCTION PERMIT" FROM THE PUBLIC WORKS SIDEWALK INSPECTIONS OFFICE, ROOM 201 CITY HALL, 350 S. FIFTH STREET, MINNEAPOLIS, MN, 55415-1390, (612) 673-2420 BEFORE PROCEEDING WITH ANY WORK IN THE PUBLIC ROW.
7. FOR DETAIL OF CITY WALK, SEE CITY WEBSITE AT THE FOLLOWING: http://www.ci.minneapolis.mn.us/public-works/docs/ROAD-2003.pdf

layout notes:

1. ALL WRITTEN DIMENSIONS SHALL PREVAIL. DIMENSIONS ARE TO BACK OF CURB.
2. BASE INFORMATION AND DATA ARE SUBJECT TO SURVEY.
3. REPORT ALL LAYOUT DISCREPANCIES IMMEDIATELY TO ARCHITECT FOR THEIR DECISION.
4. VERIFY ALL UTILITIES, SERVICE LINES, AND OTHER BURIED CONSTRUCTION WITH THE APPROPRIATE AUTHORITY BEFORE STARTING WORK. NOTE THAT NOT ALL UTILITIES ARE INDICATED ON THE PLAN. IT IS THE CONTRACTOR'S RESPONSIBILITY TO VERIFY ALL UTILITIES AND THEIR LOCATIONS.
5. FOR PAVEMENT CONNECTIONS TO THE BUILDING SEE STRUCTURAL'S DETAIL SECTIONS.
6. FOR CONCRETE FLATWORK WITH RADII LARGER THAN 5', USE 1X6 CLEAN WOOD FORMWORK.
7. ALIGN CURB CONTROL & EXP. JOINTS WITH SIDEWALK CONTROL & EXP. JOINTS WHERE SIDEWALK ABUTTS NEW CURB.
8. SEE ELECTRICAL PLAN FOR LIGHTING PLAN.
9. SEE CIVIL DRAWINGS FOR PROPOSED WATER, SANITARY, STORM LINES & CATCH BASIN STRUCTURES.

site layout plan

scale:1" to 20'-0"

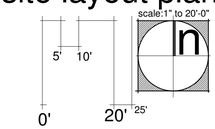

CERMAK RHOADES ARCHITECTS
775 Raymond Avenue, Suite 400, St. Paul, MN 55114
p 651.225.8323 f 651.225.8728 www.cermakrhoades.com

I hereby certify that this plan, specification, or report was prepared by me or under my direct supervision and that I am a duly registered Landscape Architect under the laws of the State of Minnesota.

Signed

spencer jones

DATE: 20 JUNE 2011

REG. NO. 15137

spencer jones
landscape architect
8001 valley view drive
golden valley, mn 55427
t. 952-545-5208

city submittal

site layout plan
EMMANUEL HOUSING

822 3RD STREET SOUTH
MINNEAPOLIS, MINNESOTA

REVISIONS
3 AUGUST 2011

DATE ISSUED	20 JUNE 2011
JOB NO.	
FILE NAME	

L-2

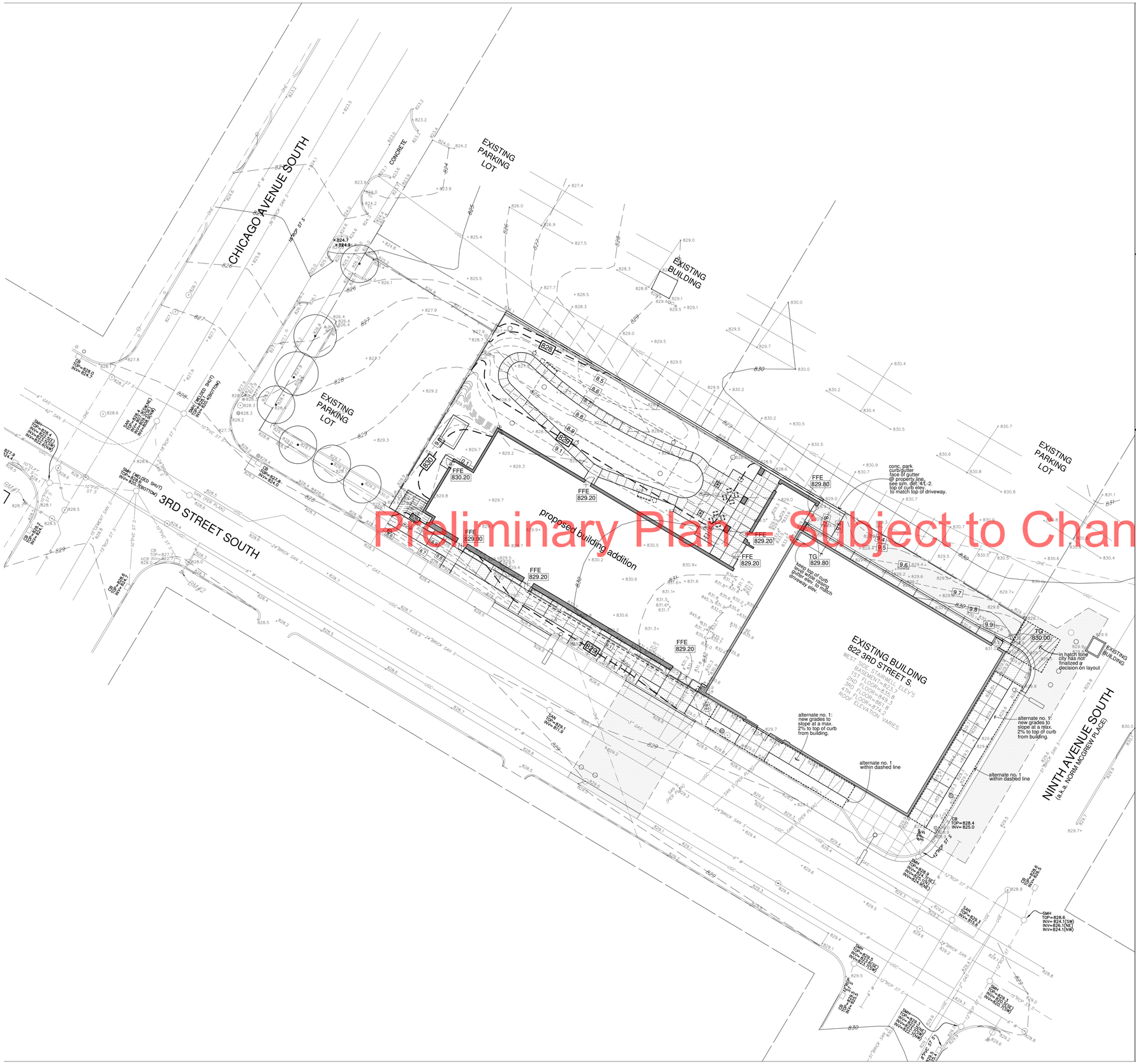

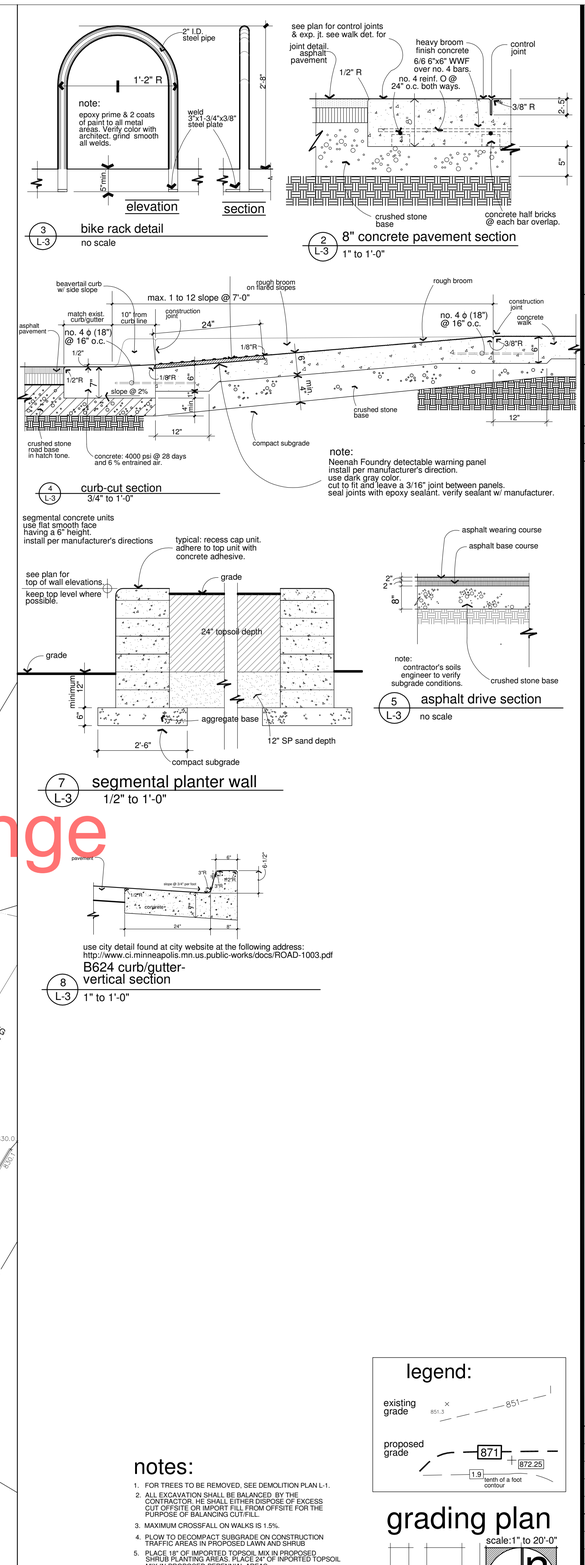

use city detail found at city website at the following address:
http://www.ci.minneapolis.mn.us.public-works/docs/ROAD-1003.pdf
B624 curb/gutter-
8 L-3 vertical section
1" to 1'-0"

legend:

existing grade 851.3 × 851

proposed grade 871 872.25

1.9 tenth of a foot contour

notes:

1. FOR TREES TO BE REMOVED, SEE DEMOLITION PLAN L-1.
2. ALL EXCAVATION SHALL BE BALANCED BY THE CONTRACTOR. HE SHALL EITHER DISPOSE OF EXCESS CUT OFFSITE OR IMPORT FILL FROM OFFSITE FOR THE PURPOSE OF BALANCING CUT-FILL.
3. MAXIMUM CROSSFALL ON WALKS IS 1.5%.
4. PLOW TO DECOMPACT SUBGRADE ON CONSTRUCTION TRAFFIC AREAS IN PROPOSED LAWN AND SHRUB
5. PLACE 18" OF IMPORTED TOPSOIL MIX IN PROPOSED SHRUB PLANTING AREAS. PLACE 24" OF IMPORTED TOPSOIL MIX IN PROPOSED PERENNIAL AREAS.
6. FOR LOCATION OF PLANTING AREAS WHICH REQUIRE A DEPTH OF TOPSOIL, SEE LANDSCAPE PLAN L-4.
7. BENCHMARK:
   1. TOP OF TOP NUT OF FIRE HYDRANT IN THE SOUTHWEST QUADRANT OF 3RD AVENUE SOUTH AND CHICAGO AVENUE SOUTH. ELEVATION = 831.38 FEET
   2. TOP OF TOP NUT OF FIRE HYDRANT IN THE SOUTHEAST QUADRANT OF 3RD AVENUE SOUTH AND CHICAGO AVENUE SOUTH. ELEVATION = 831.34 FEET

grading plan

scale:1" to 20'-0"

5' 10' 0' 20' 25'

CERMAK RHOADES ARCHITECTS
275 East Fourth Street, Suite 400, St. Paul, MN 55101
p 651.225.8840 | f 651.225.8738 | www.cermakrhoades.com

I hereby certify that this plan, specification, or report was prepared by me or under my direct supervision and that I am a duly registered Landscape Architect under the laws of the State of Minnesota.

Signed

spencer jones

DATE: 20 JUNE 2011

REG. NO. 15137

spencer jones
landscape architect
600 hennepin ave
minneapolis, mn 55403
t. 612.904.1100

city submittal

GRADING PLAN
EMMANUEL HOUSING

822 3RD STREET SOUTH
MINNEAPOLIS, MINNESOTA

REVISIONS
3 AUGUST 2011

DATE ISSUED	20 JUNE 2011
JOB NO.	
FILE NAME	

L-3

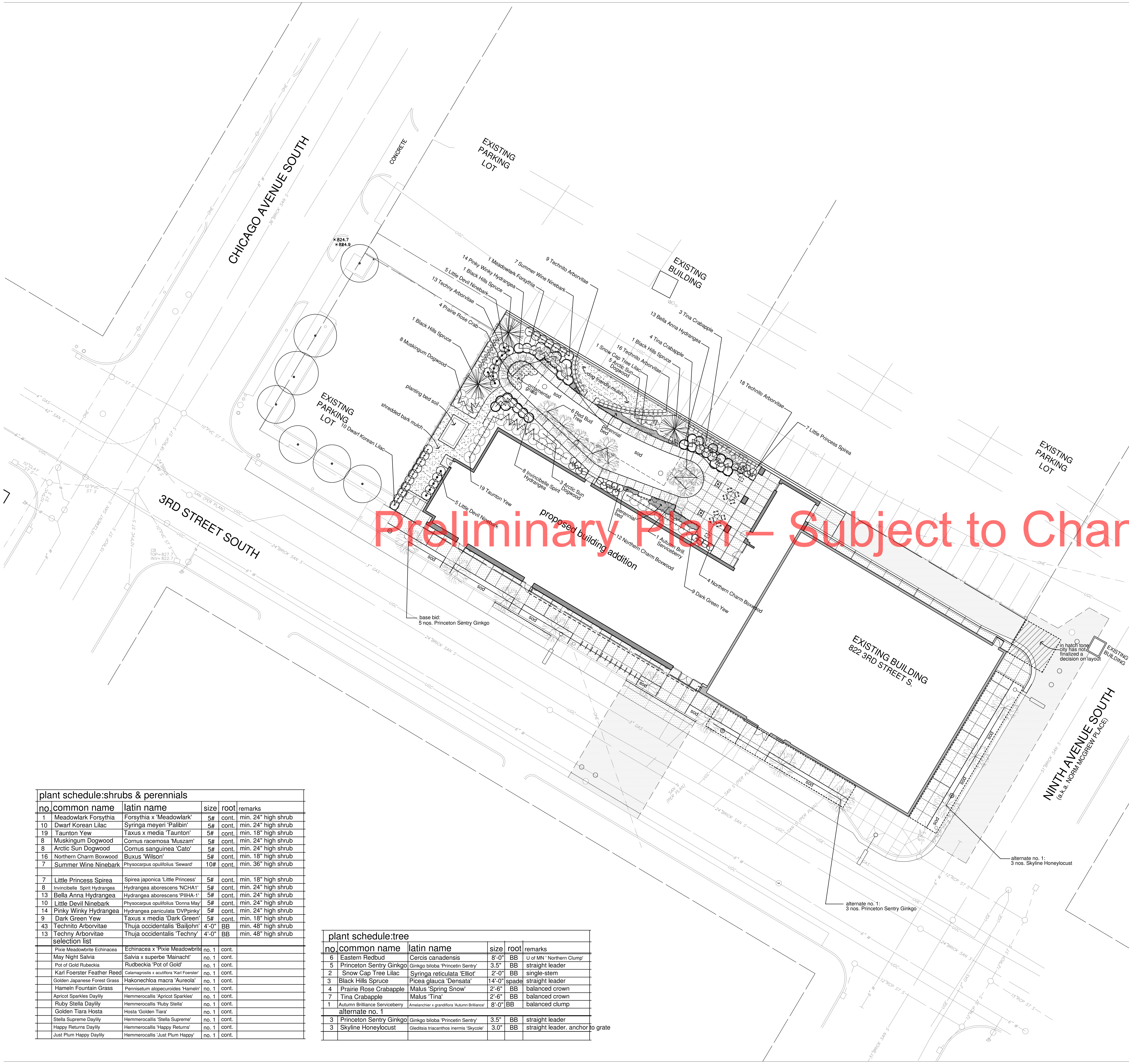

Preliminary Plan – Subject to Change

plant schedule:shrubs & perennials

no.	common name	latin name	size	root	remarks
1	Meadowlark Forsythia	Forsythia x 'Meadowlark'	5#	cont.	min. 24" high shrub
10	Dwarf Korean Lilac	Syringa meyeri 'Palibin'	5#	cont.	min. 24" high shrub
19	Taunton Yew	Taxus x media 'Taunton'	5#	cont.	min. 18" high shrub
8	Muskingum Dogwood	Cornus racemosa 'Muszam'	5#	cont.	min. 24" high shrub
8	Arctic Sun Dogwood	Cornus sanguinea 'Cato'	5#	cont.	min. 24" high shrub
16	Northern Charm Boxwood	Buxus 'Wilson'	5#	cont.	min. 18" high shrub
7	Summer Wine Ninebark	Physocarpus opulifolius 'Seward'	10#	cont.	min. 36" high shrub
7	Little Princess Spirea	Spirea japonica 'Little Princess'	5#	cont.	min. 18" high shrub
8	Invincibelle Spirit Hydrangea	Hydrangea aborescens 'NCHA1'	5#	cont.	min. 24" high shrub
13	Bella Anna Hydrangea	Hydrangea aborescens 'PIIHA-1'	5#	cont.	min. 24" high shrub
10	Little Devil Ninebark	Physocarpus opulifolius 'Donna May'	5#	cont.	min. 24" high shrub
14	Pinky Winky Hydrangea	Hydrangea paniculata 'DVPpinky'	5#	cont.	min. 24" high shrub
9	Dark Green Yew	Taxus x media 'Dark Green'	5#	cont.	min. 18" high shrub
43	Technito Arborvitae	Thuja occidentalis 'Bailjohn'	4'-0"	BB	min. 48" high shrub
13	Techny Arborvitae	Thuja occidentalis 'Techny'	4'-0"	BB	min. 48" high shrub
	selection list				
	Pixie Meadowbrite Echinacea	Echinacea x 'Pixie Meadowbrite	no. 1	cont.	
	May Night Salvia	Salvia x superbe 'Mainacht'	no. 1	cont.	
	Pot of Gold Rubeckia	Rudbeckia 'Pot of Gold'	no. 1	cont.	
	Karl Foerster Feather Reed	Calamagrostis x acutiflora 'Karl Foerster'	no. 1	cont.	
	Golden Japanese Forest Grass	Hakonechloa macra 'Aureola'	no. 1	cont.	
	Hameln Fountain Grass	Pennisetum alopecuroides 'Hameln'	no. 1	cont.	
	Apricot Sparkles Daylily	Hemmerocallis 'Apricot Sparkles'	no. 1	cont.	
	Ruby Stella Daylily	Hemmerocallis 'Ruby Stella'	no. 1	cont.	
	Golden Tiara Hosta	Hosta 'Golden Tiara'	no. 1	cont.	
	Stella Supreme Daylily	Hemmerocallis 'Stella Supreme'	no. 1	cont.	
	Happy Returns Daylily	Hemmerocallis 'Happy Returns'	no. 1	cont.	
	Just Plum Happy Daylily	Hemmerocallis 'Just Plum Happy'	no. 1	cont.	

plant schedule:tree

no.	common name	latin name	size	root	remarks
6	Eastern Redbud	Cercis canadensis	8'-0"	BB	U of MN ' Northern Clump'
5	Princeton Sentry Ginkgo	Ginkgo biloba 'Princetin Sentry'	3.5"	BB	straight leader
2	Snow Cap Tree Lilac	Syringa reticulata 'Elliot'	2'-0"	BB	single-stem
3	Black Hills Spruce	Picea glauca 'Densata'	14'-0"	spade	straight leader
4	Prairie Rose Crabapple	Malus 'Spring Snow'	2'-6"	BB	balanced crown
7	Tina Crabapple	Malus 'Tina'	2'-6"	BB	balanced crown
1	Autumn Brilliance Serviceberry	Amelanchier x grandiflora 'Autumn Brilliance'	8'-0"	BB	balanced clump
	alternate no. 1				
3	Princeton Sentry Ginkgo	Ginkgo biloba 'Princetin Sentry'	3.5"	BB	straight leader
3	Skyline Honeylocust	Gleditsia triacanthos inermis 'Skycole'	3.0"	BB	straight leader. anchor to grate

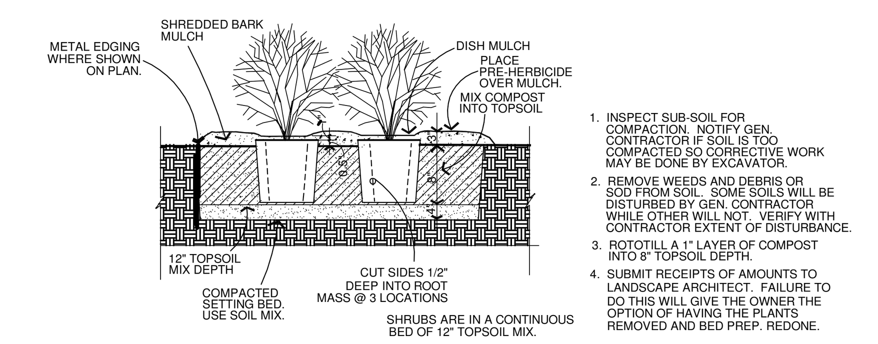

1. INSPECT SUB-SOIL FOR COMPACTION. NOTIFY GEN. CONTRACTOR IF SOIL IS TOO COMPACTED SO CORRECTIVE WORK MAY BE DONE BY EXCAVATOR.
2. REMOVE WEEDS AND DEBRIS OR SOD FROM SOIL. SOME SOILS WILL BE DISTURBED BY GEN. CONTRACTOR WHILE OTHER WILL NOT. VERIFY WITH CONTRACTOR EXTENT OF DISTURBANCE.
3. ROTOTILL A 1" LAYER OF COMPOST INTO 8" TOPSOIL DEPTH.
4. SUBMIT RECEIPTS OF AMOUNTS TO LANDSCAPE ARCHITECT. FAILURE TO DO THIS WILL GIVE THE OWNER THE OPTION OF HAVING THE PLANTS REMOVED AND BED PREP. REDONE.

5 / L-4 shrub planting detail
no scale

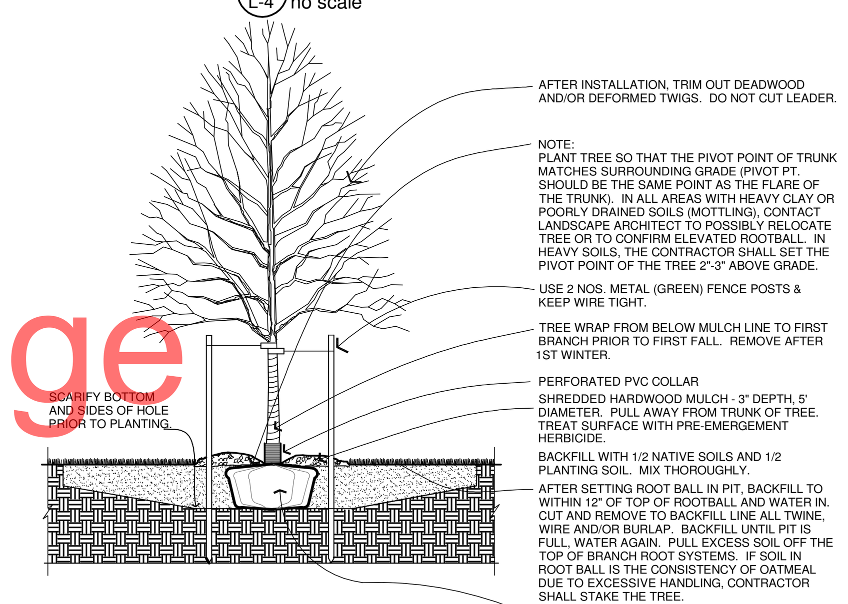

4 / L-4 tree planting detail
no scale

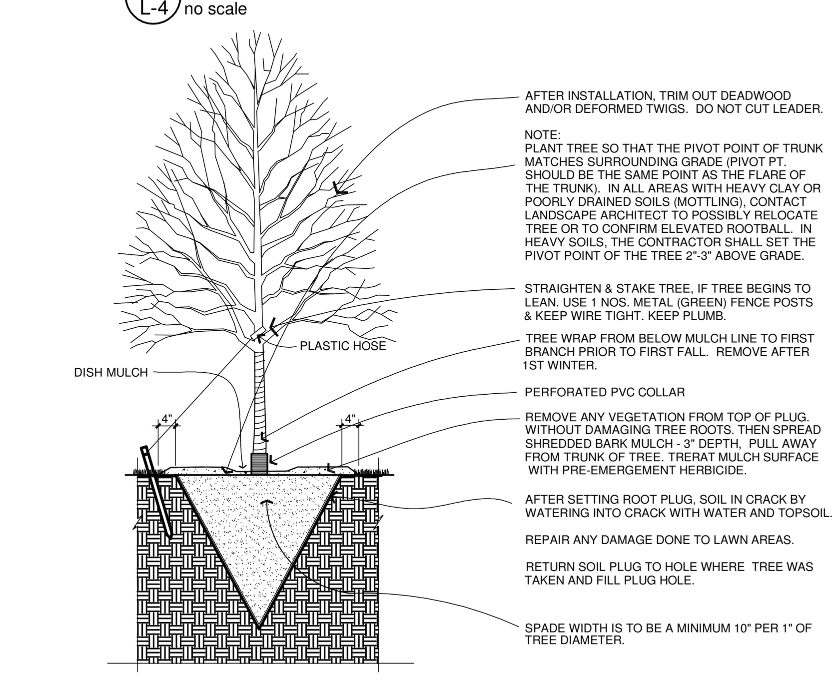

3 / L-4 tree spading detail
no scale

notes:

1. ALL DISTURBED AREAS ARE TO BE SODDED EXCEPT WHERE SHOWN TO BE PAVED, SHRUB BED, OR SEEDED.
2. ALL PLANT MATERIAL AND WORK IS TO BE IN COMPLIANCE WITH ANSI 260.1 AMERICAN STD. FOR NURSERY STOCK.
3. USE A 3" LAYER OF SHREDDED BARK MULCH OVER ENTIRE PLANTING BED.
4. WHERE SHRUBS ARE GROUPED, CREATE ONE OVERALL CONTINUOUS PLANTING BED.
5. ROTOTILL 1" DEPTH OF WELL ROTTED COMPOST INTO 4" OF TOPSOIL IN SHRUB BED AREAS.
6. VERIFY ALL UTILITIES, SERVICE LINES AND OTHER BURIED CONSTRUCTION WITH THE APPROPRIATE AUTHORITY PRIOR TO START OF WORK.
7. FOR BB TREE PLANTING, SEE DET. 4/L-4.
8. FOR SHRUB PLANTING, SEE DET. 5/L-4
9. FOR PERENNIAL PLANTING, SEE DET. 2/L-4
10. FOR TREE SPADE PLANTING, SEE DET. 3/L-4.
11. WHERE PLANT NUMBERS VARY BETWEEN PLANT LIST & PLAN DRAWING, THE HIGHER NUMBER SHALL PREVAIL AS THE CONTRACT NUMBER.

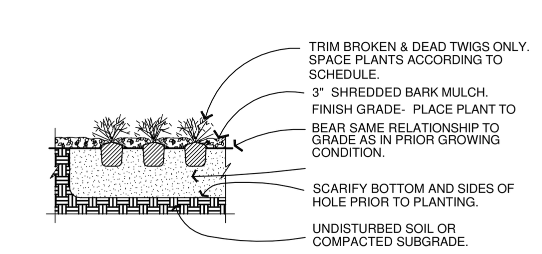

2 / L-4 perennial planting detail
no scale

key:
proposed tree.
existing tree

landscape plan
scale:1" to 20'-0"
0' 5' 10' 20' 25'

CERMAK RHOADES ARCHITECTS
275 East Fourth Street, Suite 800, St. Paul, MN 5510 1
p 651.225.8623 f 651.225.8720 www.cermakrhoades.com

I hereby certify that this plan, specification, or report was prepared by me or under my direct supervision and that I am a duly registered Landscape Architect under the laws of the State of Minnesota.

Signed

spencer jones

DATE: 20 JUNE 2011

REG. NO. 15137

spencer jones
landscape architect
809 ivanhoe drive
northfield mn 55057
t. 507-645-4188 f. 507-645-8268

city submittal

LANDSCAPE PLAN
EMMANUEL HOUSING
822 3RD STREET SOUTH
MINNEAPOLIS, MINNESOTA

REVISIONS
3 AUGUST 2011

DATE ISSUED 20 JUNE 2011
JOB NO.
FILE NAME

L-4

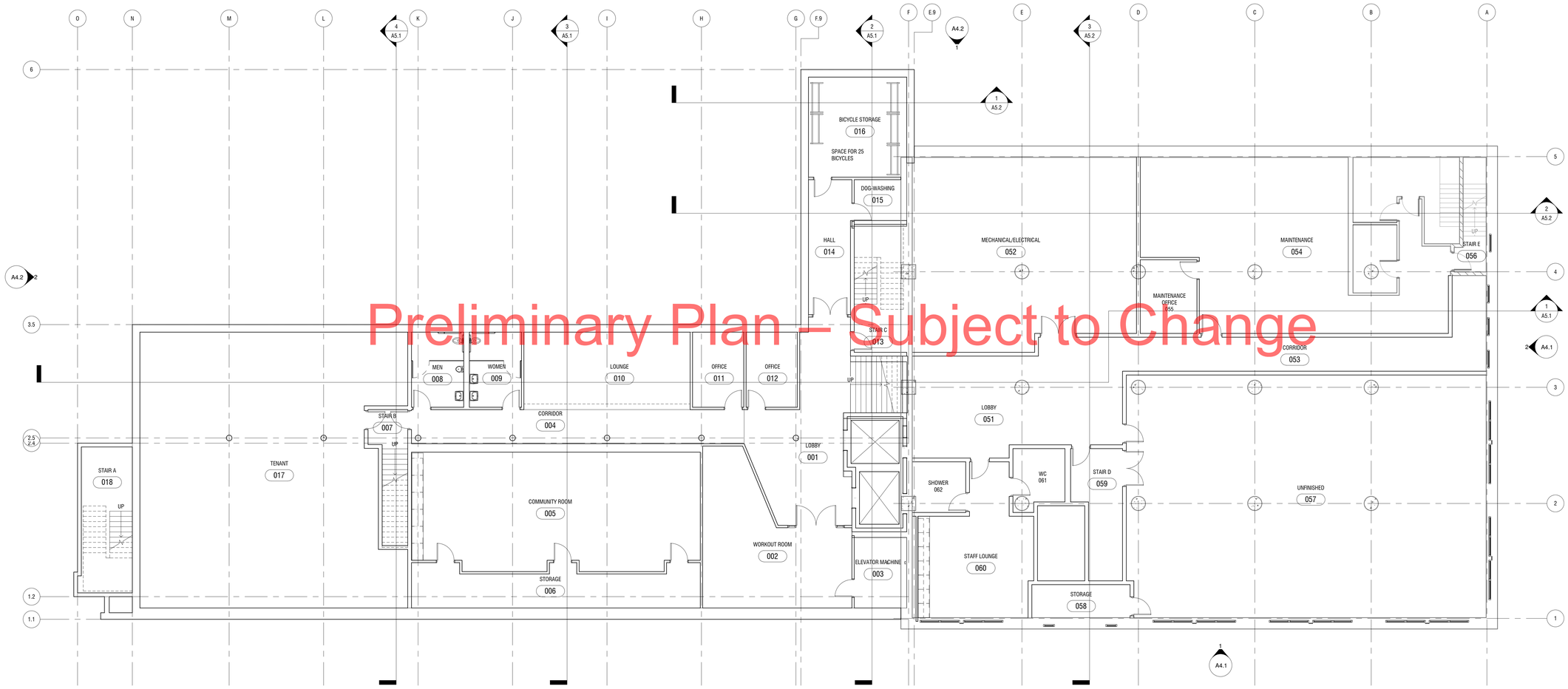

Preliminary Plan – Subject to Change

1 FLOOR PLAN - BW/BE
1/8" = 1'-0"

CERMAK RHOADES ARCHITECTS
275 East Fourth Street, Suite 800, St Paul MN 55101
p: 651 225 8623 f: 651 225 8720 www.cermakrhoades.com

I hereby certify that this plan, specification, or report was prepared by me or under my direct supervision and that I am a duly registered Architect under the laws of the State of Minnesota

Signed:

Date: 08/03/11

Reg. No:

NOT FOR CONSTRUCTION

FLOOR PLAN - BW/BE

EMANUEL HOUSING
RS EDEN
822 SOUTH 3RD STREET
MINNEAPOLIS, MN 55415

Revisions:

Date issued: 08/03/11
Job No: 0632

A2.2

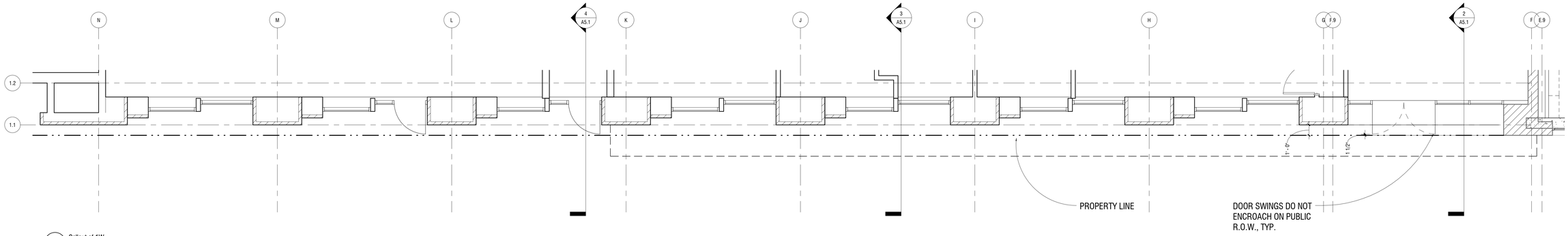

2 Callout of 1W
1/4" = 1'-0"

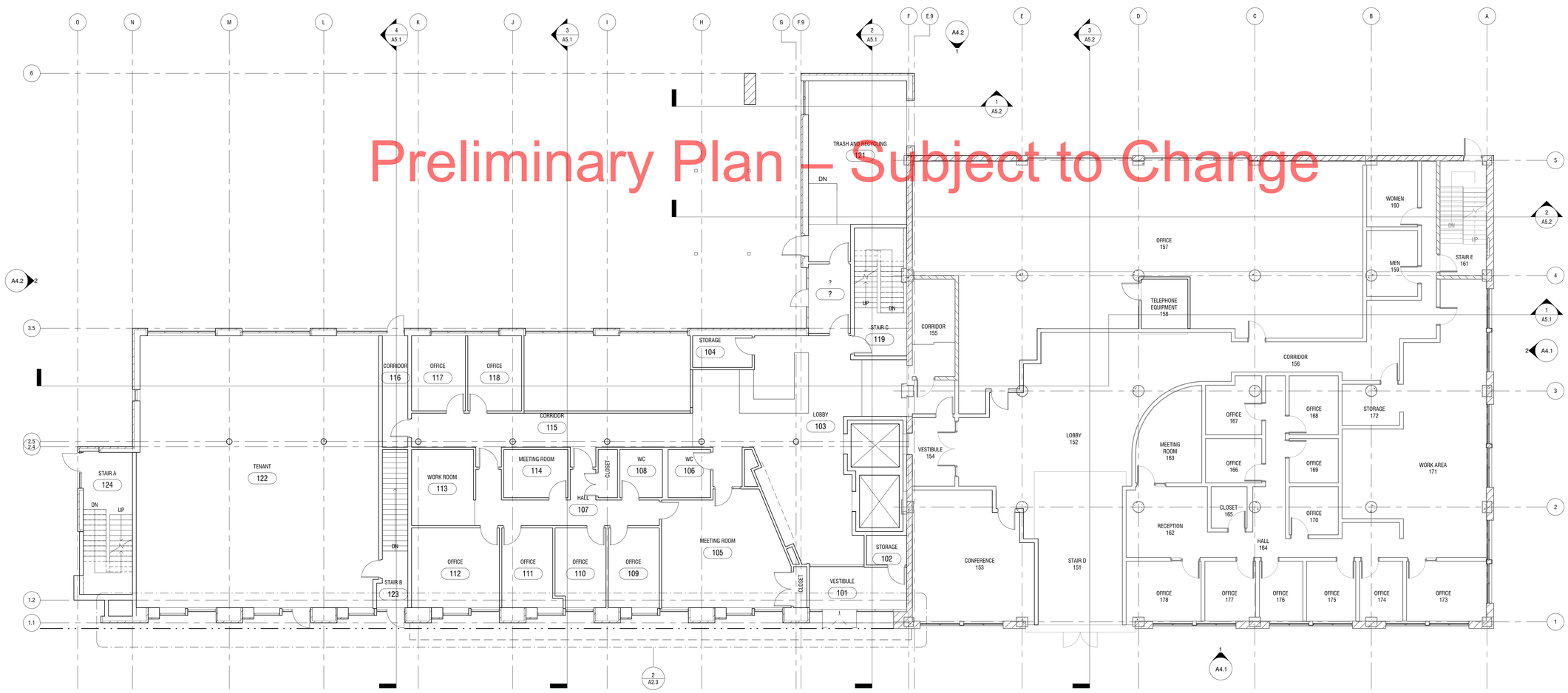

1 FLOOR PLAN - 1W/1E
1/8" = 1'-0"

CERMAK RHOADES ARCHITECTS
275 East Fourth Street, Suite 800, St Paul MN 55101
p: 651 225 8623 f: 651 225 8720 www.cermakrhoades.com

I hereby certify that this plan, specification, or report was prepared by me or under my direct supervision and that I am a duly registered Architect under the laws of the State of Minnesota

Signed:

Date: 08/03/11

Reg. No:

NOT FOR CONSTRUCTION

FLOOR PLAN - 1W/1E

EMANUEL HOUSING
RS EDEN
822 SOUTH 3RD STREET
MINNEAPOLIS, MN 55415

Revisions:

Date issued: 08/03/11

Job No: 0632

A2.3

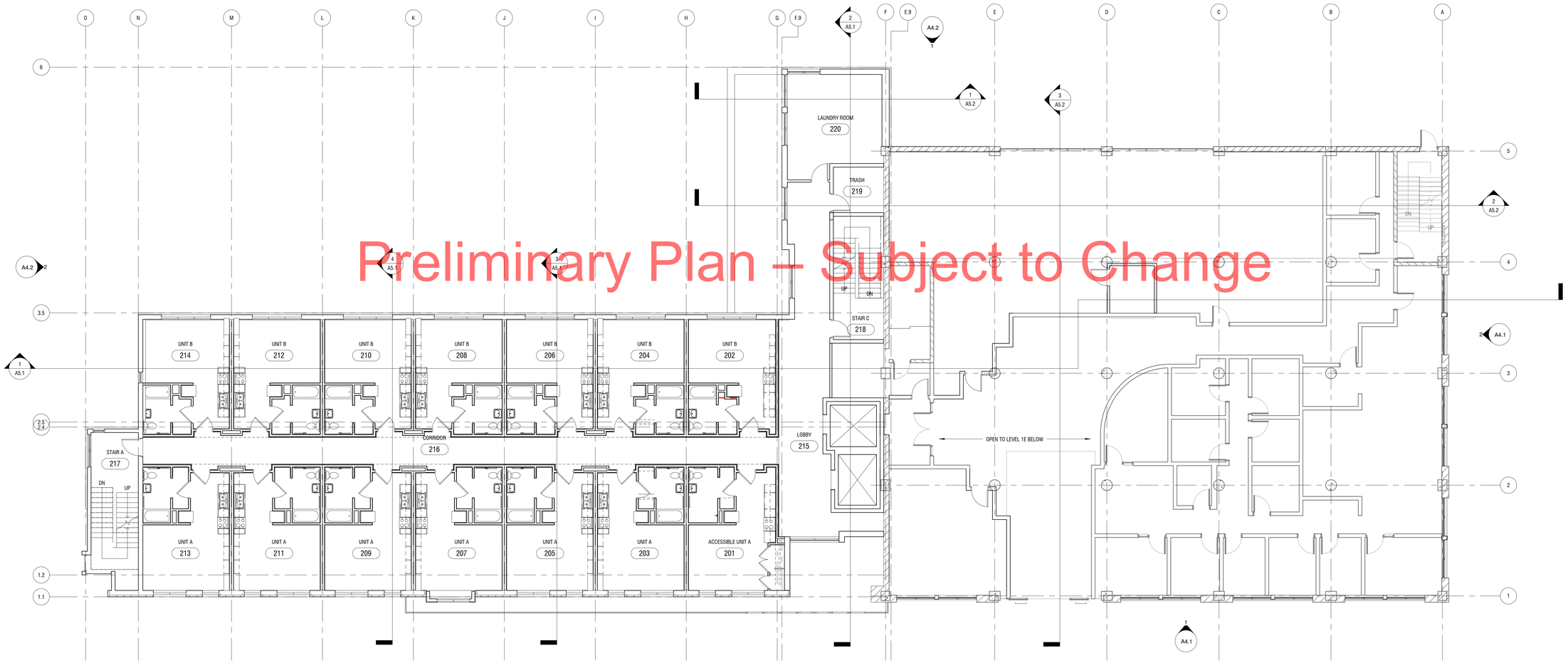

Preliminary Plan – Subject to Change

1 2W
1/8" = 1'-0"

CERMAK RHOADES ARCHITECTS
275 East Fourth Street, Suite 800, St Paul MN 55101
p: 651 225 8623 f: 651 225 8720 www.cermakrhoades.com

I hereby certify that this plan, specification, or report was prepared by me or under my direct supervision and that I am a duly registered Architect under the laws of the State of Minnesota

Signed:

Date: 08/03/11

Reg. No:

NOT FOR CONSTRUCTION

FLOOR PLAN - 2W

EMANUEL HOUSING

RS EDEN
822 SOUTH 3RD STREET
MINNEAPOLIS, MN 55415

Revisions:

Date issued: 08/03/11

Job No: 0632

A2.4

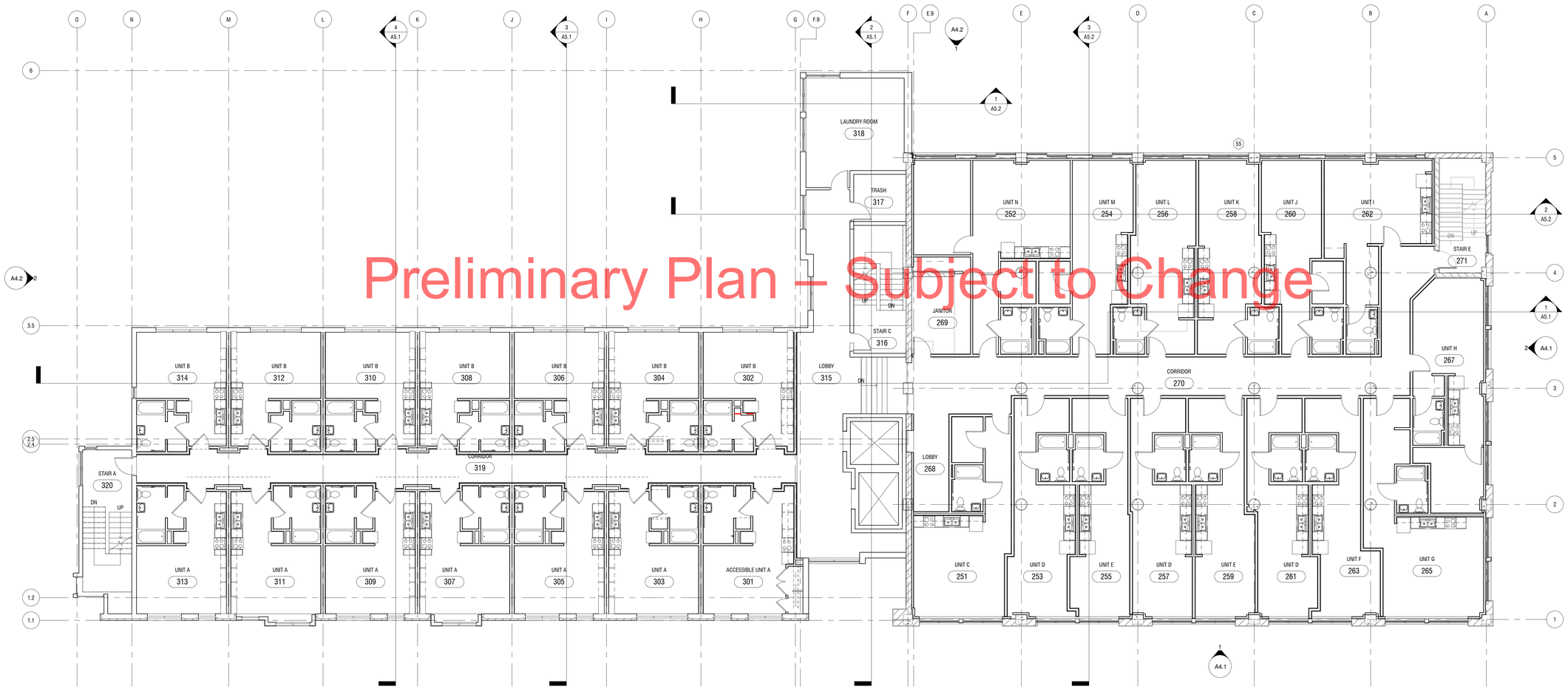

1 FLOOR PLAN - 3W/2E
1/8" = 1'-0"

CERMAK RHOADES ARCHITECTS
275 East Fourth Street, Suite 800, St Paul MN 55101
p: 651 225 8623 f: 651 225 8720 www.cermakrhoades.com

I hereby certify that this plan, specification, or report was prepared by me or under my direct supervision and that I am a duly registered Architect under the laws of the State of Minnesota

Signed:

Date: 08/03/11

Reg. No:

NOT FOR CONSTRUCTION

FLOOR PLAN - 3W/2E

EMANUEL HOUSING
RS EDEN
822 SOUTH 3RD STREET
MINNEAPOLIS, MN 55415

Revisions:

Date issued: 08/03/11

Job No: 0632

A2.5

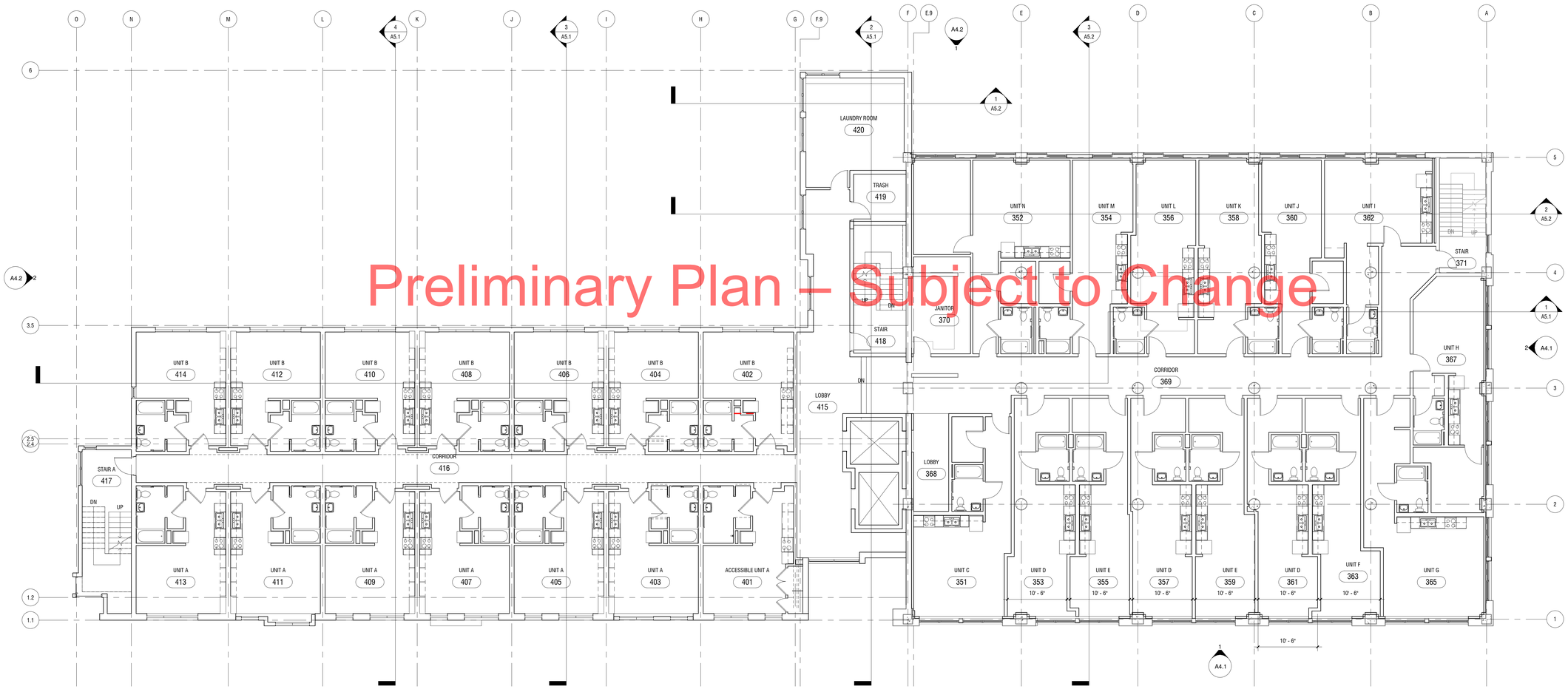

1 4W/3E
1/8" = 1'-0"

CERMAK RHOADES ARCHITECTS
275 East Fourth Street, Suite 800, St Paul MN 55101
p: 651 225 8623 f: 651 225 8720 www.cermakrhoades.com

I hereby certify that this plan, specification, or report was prepared by me or under my direct supervision and that I am a duly registered Architect under the laws of the State of Minnesota

Signed:

Date: 08/03/11

Reg. No:

NOT FOR CONSTRUCTION

FLOOR PLAN - 4W/3E

EMANUEL HOUSING
RS EDEN
822 SOUTH 3RD STREET
MINNEAPOLIS, MN 55415

Revisions:

Date issued: 08/03/11

Job No: 0632

A2.6

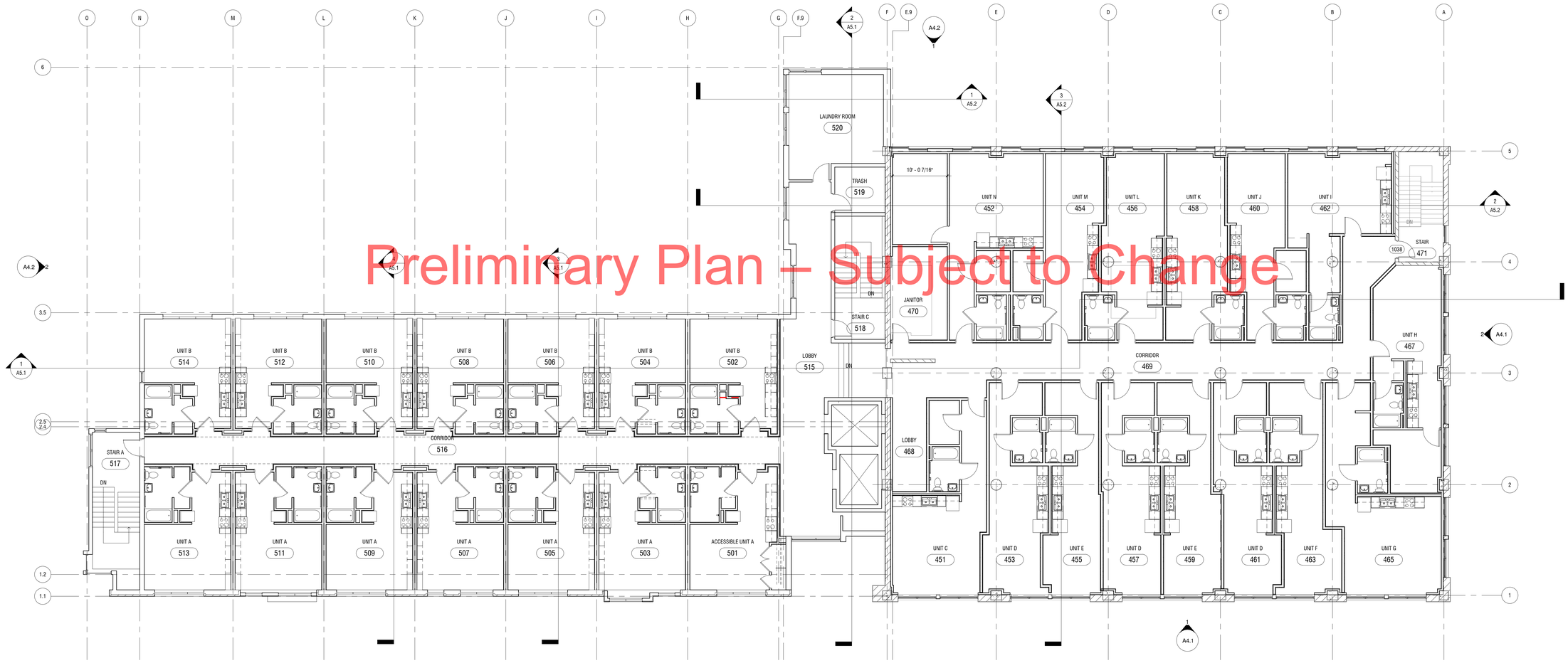

1 5W/4E
1/8" = 1'-0"

CERMAK RHOADES ARCHITECTS
275 East Fourth Street, Suite 800, St Paul MN 55101
p 651 225 8623 f 651 225 8720 www.cermakrhoades.com

I hereby certify that this plan, specification, or report was prepared by me or under my direct supervision and that I am a duly registered Architect under the laws of the State of Minnesota

Signed:

Date: 08/03/11

Reg. No:

NOT FOR CONSTRUCTION

FLOOR PLAN - 5W/4E

EMANUEL HOUSING

RS EDEN
822 SOUTH 3RD STREET
MINNEAPOLIS, MN 55415

Revisions:

Date issued: 08/03/11

Job No: 0632

A2.7

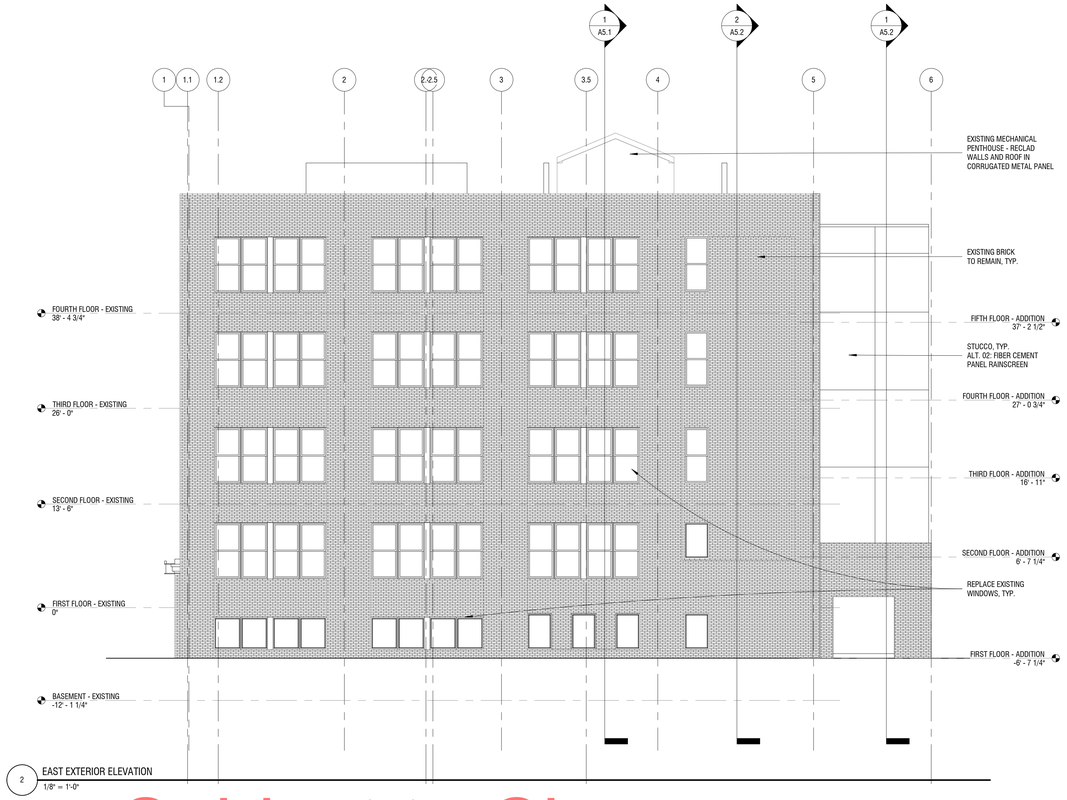

2 EAST EXTERIOR ELEVATION
1/8" = 1'-0"

Preliminary Plan – Subject to Change

1 SOUTH EXTERIOR ELEVATION
1/8" = 1'-0"

CERMAK RHOADES ARCHITECTS
275 East Fourth Street, Suite 800, St Paul MN 55101
p: 651 225 8623 f: 651 225 8720 www.cermakrhoades.com

I hereby certify that this plan, specification, or report was prepared by me or under my direct supervision and that I am a duly registered Architect under the laws of the State of Minnesota

Signed:

Date: 08/03/11

Reg. No:

NOT FOR CONSTRUCTION

SOUTH AND EAST EXTERIOR ELEVATIONS

EMANUEL HOUSING

RS EDEN
822 SOUTH 3RD STREET
MINNEAPOLIS, MN 55415

Revisions:

Date issued: 08/03/11

Job No: 0632

A4.1

2 WEST EXTERIOR ELEVATION
1/8" = 1'-0"

Preliminary Plan – Subject to Change

1 NORTH EXTERIOR ELEVATION
1/8" = 1'-0"

CERMAK RHOADES ARCHITECTS
275 East Fourth Street, Suite 800, St Paul MN 55101
p 651 225 8623 f 651 225 8720 www.cermakrhoades.com

I hereby certify that this plan, specification, or report was prepared by me or under my direct supervision and that I am a duly registered Architect under the laws of the State of Minnesota

Signed:

Date: 08/03/11

Reg. No:

NOT FOR CONSTRUCTION

NORTH AND WEST EXTERIOR ELEVATIONS

EMANUEL HOUSING

RS EDEN
822 SOUTH 3RD STREET
MINNEAPOLIS, MN 55415

Revisions:

Date issued: 08/03/11

Job No: 0632

A4.2