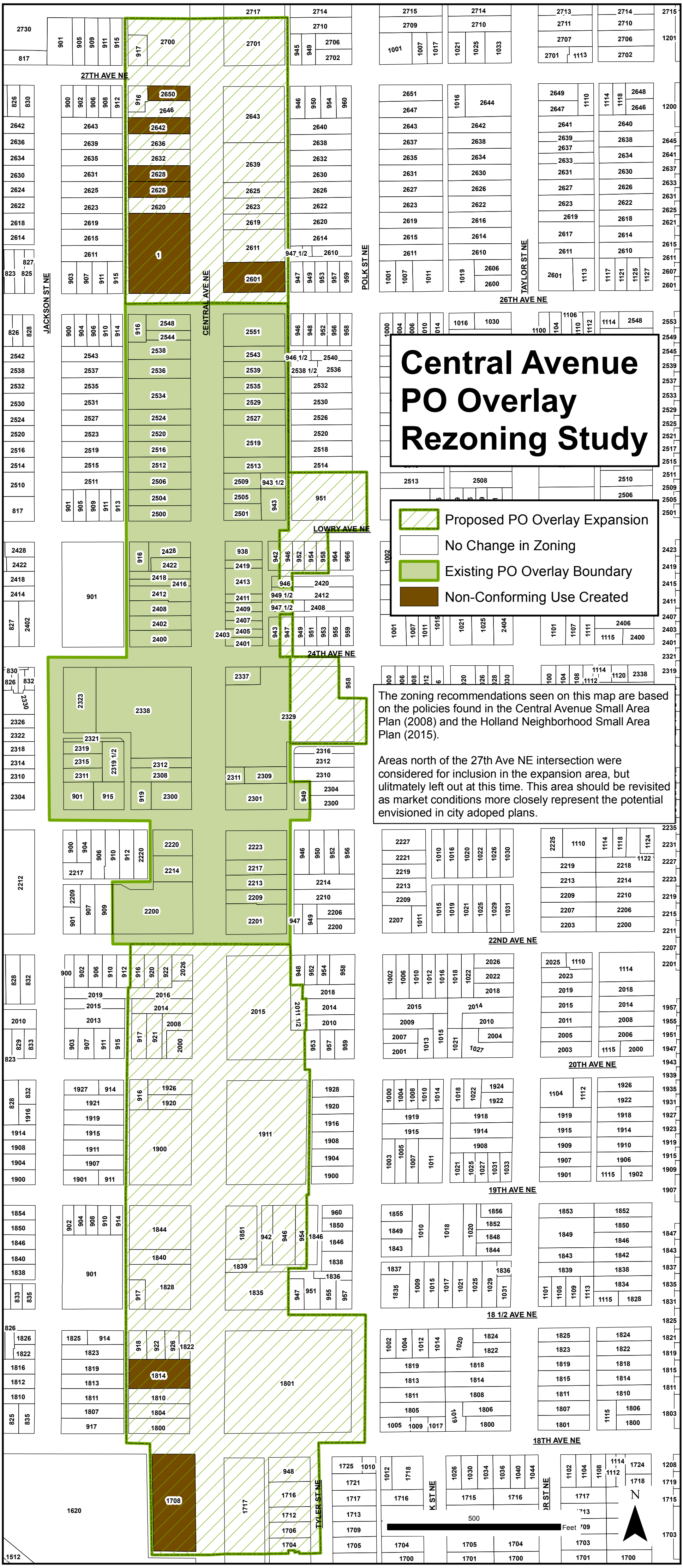

Created by City of Minneapolis Department of Community Planning and Economic Development - Date: 7/26/2016

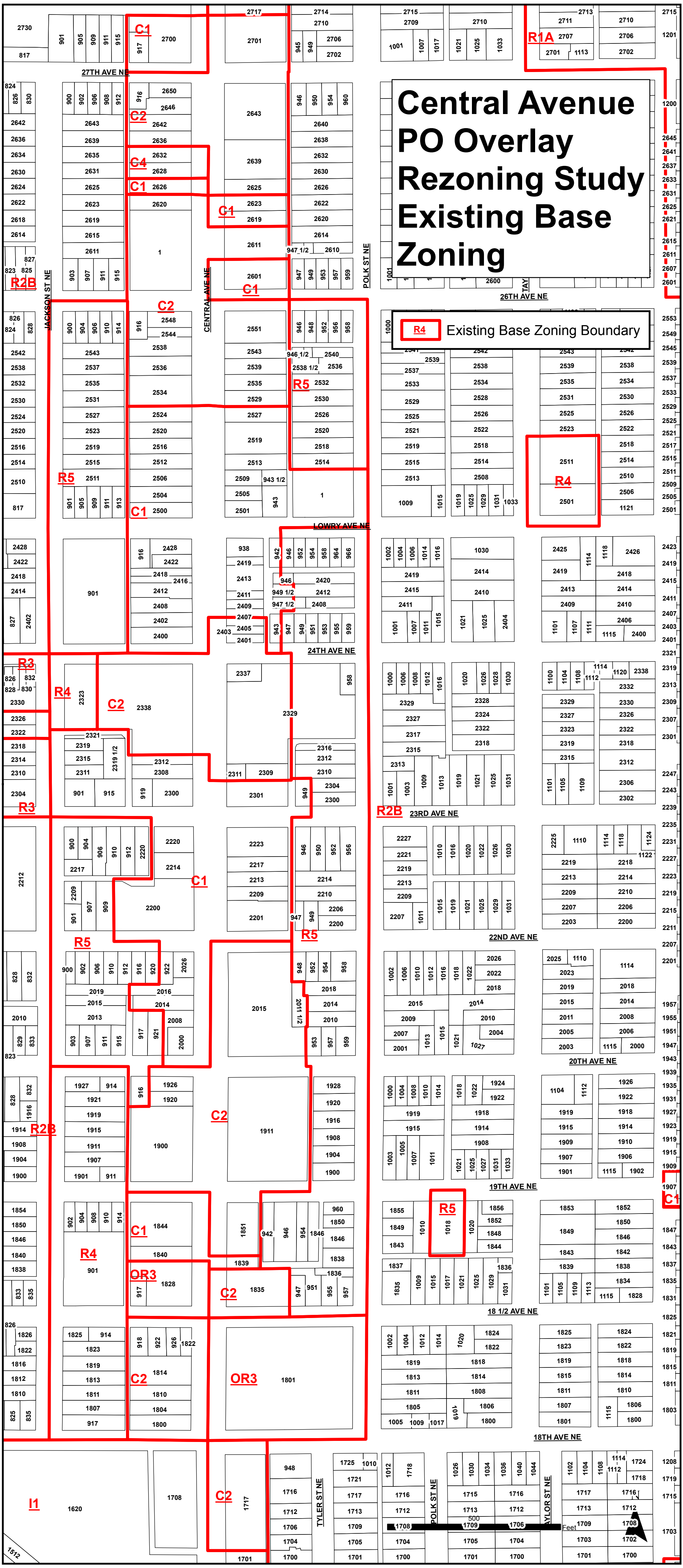

Created by City of Minneapolis Department of Community Planning and Economic Development - Date: 4/20/2016

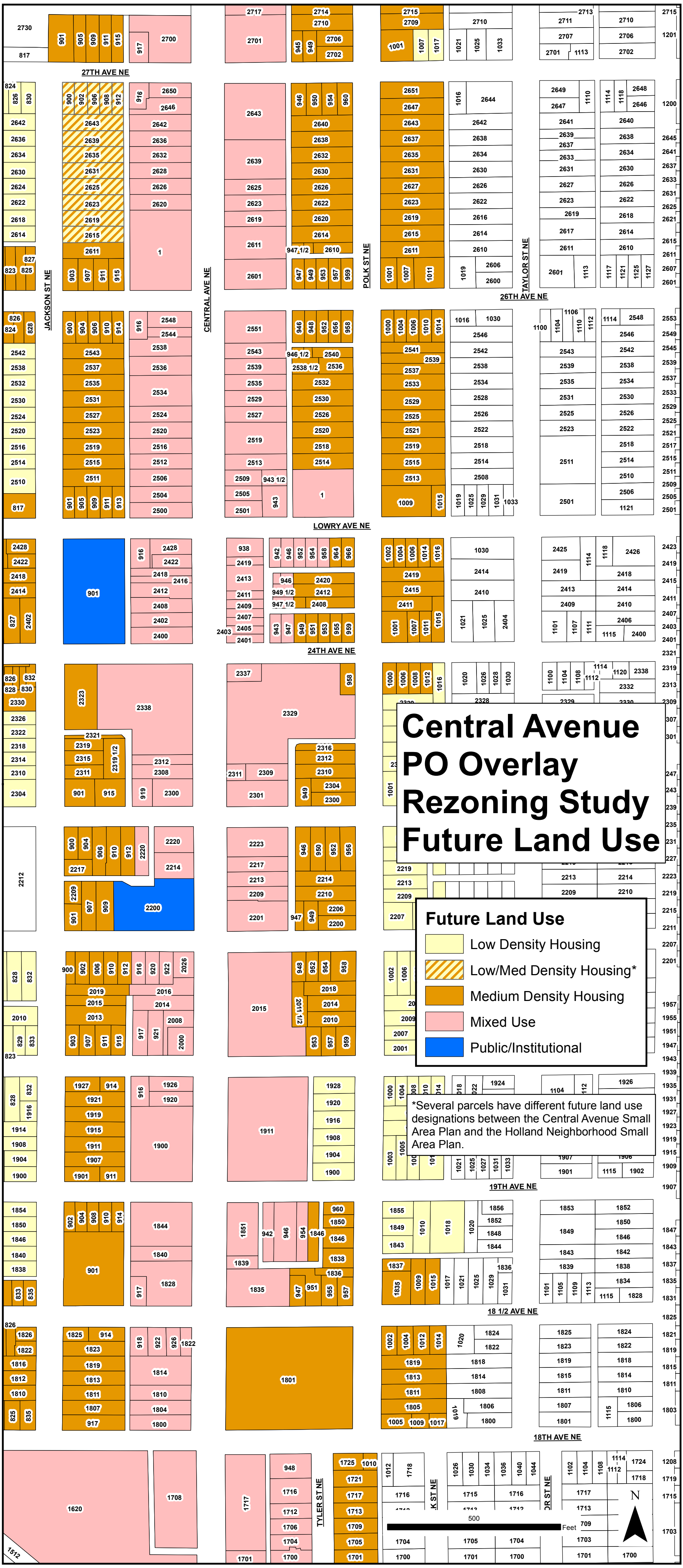

Created by City of Minneapolis Department of Community Planning and Economic Development - Date: 4/20/2016

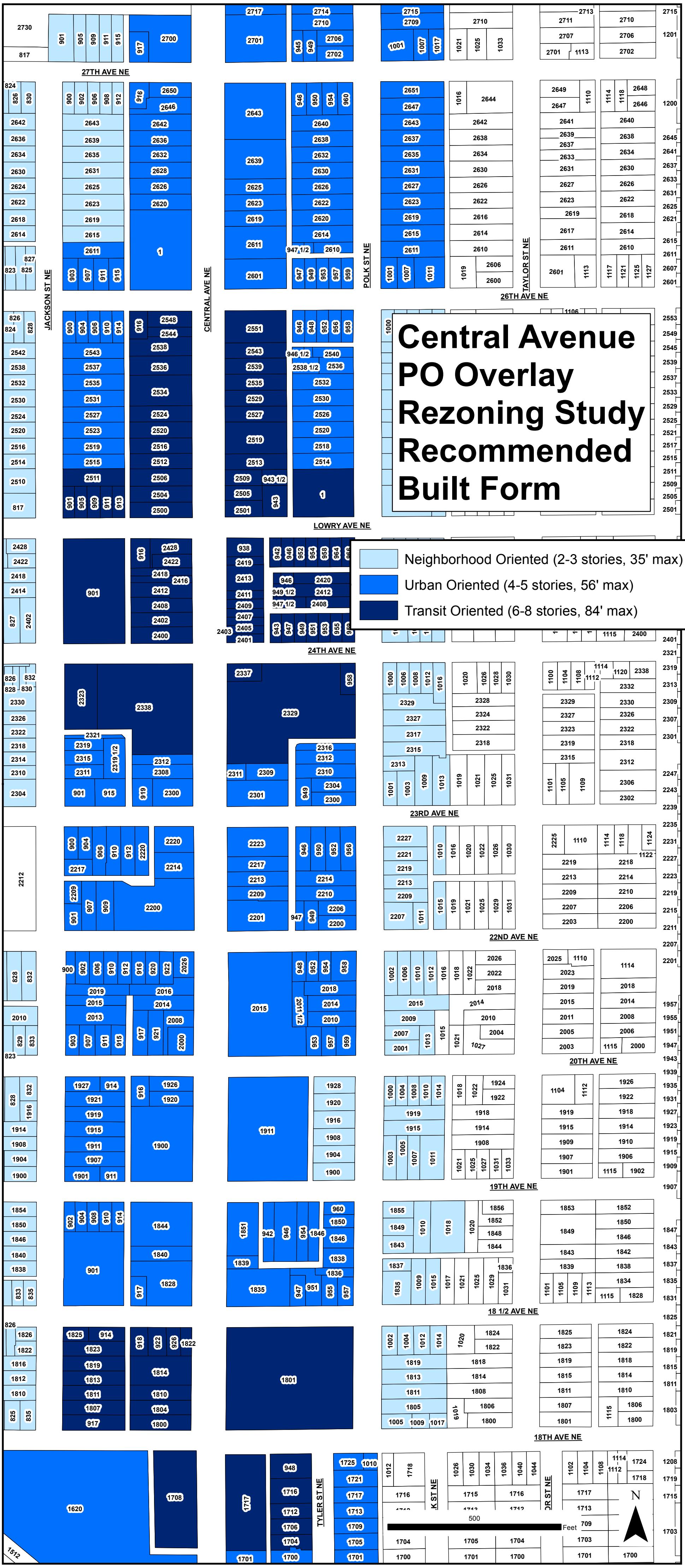

Created by City of Minneapolis Department of Community Planning and Economic Development - Date: 4/20/2016