CPED STAFF REPORT

Prepared for the City Planning Commission

CPC Agenda Item #5
January 26, 2015
BZZ-6963

LAND USE APPLICATION SUMMARY

Property Location: 1901 Fillmore Street Northeast
Project Name: Bonicelli
Prepared By: Hilary Dvorak, Principal Planner, (612) 673-2639
Applicant: Laura Bonicelli
Project Contact: Laura Bonicelli
Request: To open a restaurant on the ground floor of a mixed-use building.
Required Applications:

Rezoning	From the R2B zoning district to the C1 zoning district.
Variance	Of the enclosed building standards to allow outdoor grilling.
Variance	To reduce the minimum drive aisle width from 22 feet to 12 feet 11 inches.

SITE DATA

Existing Zoning	R2B Two-family District
Lot Area	9,762 square feet / .224 acres
Ward(s)	1
Neighborhood(s)	Windom Park
Designated Future Land Use	Urban Neighborhood
Land Use Features	Commercial Corridor (Central Avenue Northeast three blocks west) Community Corridor (Johnson Street Northeast four blocks east)
Small Area Plan(s)	None

Date Application Deemed Complete	December 29, 2014	**Date Extension Letter Sent**	Not Applicable
End of 60-Day Decision Period	February 27, 2015	**End of 120-Day Decision Period**	Not Applicable

BACKGROUND

SITE DESCRIPTION AND PRESENT USE. The property is located in northeast Minneapolis on the northeast corner of Fillmore Street Northeast and 19th Avenue Northeast. The site is occupied by a mixed use building containing a grocery store on the first floor and four dwelling units on the upper floor. There is a detached two-car garage on the site and a surface parking area.

SURROUNDING PROPERTIES AND NEIGHBORHOOD. The site is surrounded by single and two-family residences. The site is located in the Windom Park neighborhood.

PROJECT DESCRIPTION. The applicant is proposing to convert the existing grocery store into a restaurant. The applicant would like to obtain a license to serve beer and wine in the restaurant. In order to obtain a liquor license the applicant needs to rezone the property from residential to commercial. Since the rezoning request is to go from residential to commercial the applicant was required to obtain consent signatures from two-thirds of the property owners within 100 feet of the site just to apply. The applicant was able to obtain the signatures.

As part of the restaurant, the applicant is proposing to grill food outdoors. The zoning code requires that all production, processing, storage, sales, display or other business activity occur within a completely enclosed building. In order to allow the outdoor grilling the applicant has applied for a variance of the enclosed building requirements.

The size of the commercial space in the building is 2,200 square feet. The parking requirement for a grocery store is one space per every 500 square feet of gross floor area in excess of 4,000 square feet. And the parking requirement for the residential portion of the building is one space per dwelling unit. The parking requirement for the grocery store and four dwelling units is eight spaces.

The site has a two-car garage on it and a surface parking area. Based on the geometry of the parking area there are five parking spaces on the site but none of them are accessed from a conforming drive aisle. The site is grandfathered for three parking spaces.

The parking requirement for a restaurant is one space for every 500 square feet of gross floor area up to 2,000 square feet plus one space for every 300 square feet of gross floor area in excess of 2,000 square feet. A 2,200 square foot restaurant requires five parking spaces. Given this, one additional parking space needs to be provided on site. The applicant is proposing to locate three additional parking spaces in the northeast corner of the site along the alley. The drive aisle requirement is 22 feet. The applicant is proposing to have a drive aisle that is 12 feet 11 inches. To make up the difference in the drive aisle width, the applicant has indicated that the 14-foot wide alley would be utilized for maneuvering. The applicant has applied for a variance to reduce the width of the drive aisle.

The applicant is proposing to rehabilitate the building. Five windows and a door would be added to the front of the building, a new cornice would be added on the northern half of the building, new awnings would be added over the entryway and the new windows and new light fixtures would be installed along the first floor façade. The entire building would also be repainted.

The existing surface parking area is located between the building and the detached garage. The surface parking area extends all the way up to the public sidewalk along 19th Avenue Northeast. In order to screen the parking area from the public street and sidewalk, and to protect pedestrians on the public sidewalk, the applicant is encouraged to provide a landscape buffer along the property line.

The refuse and recycling containers are currently not screened. To meet the requirements of the zoning code the refuse and recycling containers must be enclosed on all four sides by screening compatible with the principal structure not less than two feet higher than the refuse container or shall be otherwise effectively screened from the street, adjacent residential uses located in a residence or office residence district and adjacent permitted or conditional residential uses. The applicant will need to screen the refuse and recycling containers per the requirements of section 535.80 of the zoning code.

RELATED APPROVALS. No land use applications have been reviewed for this site.

PUBLIC COMMENTS. No comments have been submitted in regards to these applications. Any correspondence received prior to the public meeting will be forwarded on to the Planning Commission for consideration.

ANALYSIS

REZONING

The Department of Community Planning and Economic Development has analyzed the application for a rezoning of the property located at 1901 Fillmore Street Northeast from the R2B zoning district to the C1 zoning district based on the following findings:

1. *Whether the amendment is consistent with the applicable policies of the comprehensive plan.*

   The future land use map in *The Minneapolis Plan for Sustainable Growth* designates this site as Urban Neighborhood. Central Avenue Northeast, located three blocks west of the site, is a designated Commercial Corridor and Johnson Street Northeast, located four blocks east of the site, is a designated Community Corridor. The following principles and policies outlined in the plan apply to this proposal:

   Land Use Policy 1.1: Establish land use regulations to achieve the highest possible development standards, enhance the environment, protect public health, support a vital mix of land uses, and promote flexible approaches to carry out the comprehensive plan.

   1.1.5 Ensure that land use regulations continue to promote development that is compatible with nearby properties, neighborhood character, and natural features; minimizes pedestrian and vehicular conflict; promotes street life and activity; reinforces public spaces; and visually enhances development.

   Land Use Policy 1.4: Develop and maintain strong and successful commercial and mixed use areas with a wide range of character and functions to serve the needs of current and future users.

   1.4.1 Support a variety of commercial districts and corridors of varying size, intensity of development, mix of uses, and market served.

   1.4.2 Promote standards that help make commercial districts and corridors desirable, viable, and distinctly urban, including: diversity of activity, safety for pedestrians, access to desirable goods and amenities, attractive streetscape elements, density and variety of uses to encourage walking, and architectural elements to add interest at the pedestrian level.

   1.4.3 Continue to implement land use controls applicable to all uses and structures located in commercial districts and corridors, including but not limited to maximum occupancy standards,

hours open to the public, truck parking, provisions for increasing the maximum height of structures, lot dimension requirements, density bonuses, yard requirements, and enclosed building requirements.

1.4.4 Continue to encourage principles of traditional urban design including site layout that screens off-street parking and loading, buildings that reinforce the street wall, principal entrances that face the public sidewalks, and windows that provide "eyes on the street".

Land Use Policy 1.6: Recognize that market conditions and neighborhood traditions significantly influence the viability of businesses in areas of the city not designated as commercial corridors and districts.

1.6.1 Allow for retention of existing commercial uses and zoning districts in designated Urban Neighborhood areas, to the extent they are consistent with other city goals and do not adversely impact surrounding areas.

1.6.2 In parts of the city outside of designated corridors, nodes, and centers, limit territorial expansions of commercial uses and districts.

Land Use Policy 1.8: Preserve the stability and diversity of the city's neighborhoods while allowing for increased density in order to attract and retain long-term residents and businesses.

1.8.2 Advance land use regulations that retain and strengthen neighborhood character, including direction for neighborhood serving commercial uses, open space and parks, and campus and institutional uses.

Rezoning the property from the R2B Two-family District to the C1 Neighborhood Commercial District would be consistent with the applicable policies of *The Minneapolis Plan for Sustainable Growth*. The urban neighborhood designation may include undesignated nodes and some other small-scale uses, including neighborhood-serving commercial, institutional and semi-public uses scattered throughout. While the existing property is not located on a designated corridor or in a designed node, the property has been occupied by a commercial use since 1912. Commercial buildings and uses provide needed amenities and services to communities. The proposed restaurant would serve the immediate and nearby community.

2. *Whether the amendment is in the public interest and is not solely for the interest of a single property owner.*

Rezoning the property is in the public interest and is not solely for the interest of the property owner. In 1895 a dwelling was constructed on the property located at 1907 Fillmore Street Northeast and in 1904 a dwelling was constructed on the property located at 1901 Fillmore Street Northeast. In 1912 the property located at 1901 Fillmore Street Northeast was altered and a commercial building was constructed on the property. In 1922, a commercial addition was added to the front of the dwelling on the property located at 1907 Fillmore Street Northeast. Then, in 1948, an addition was added to the buildings located at 1901 and 1907 Fillmore Street Northeast that joined the two structures together. Given the history of this property, a commercial business has operated in this building for over 100 years. Rezoning the property from the R2B Two-family District to the C1 Neighborhood Commercial District will prescribe what commercial uses could locate in the building.

3. *Whether the existing uses of property and the zoning classification of property within the general area of the property in question are compatible with the proposed zoning classification, where the amendment is to change the zoning classification of particular property.*

Properties in the immediate area are zoned R2B Two-family District. There are also properties in the R1 Single-family District and R5 Multiple-family District nearby. There are properties on both Central Avenue Northeast (three blocks west) and Johnson Street Northeast (four blocks east) that are zoned commercial. The site is surrounded by single- and two-family residences. Given the surrounding zoning classifications, as well as adopted policy, rezoning the subject property to the C1 Neighborhood Commercial District would be appropriate and compatible in this location.

4. *Whether there are reasonable uses of the property in question permitted under the existing zoning classification, where the amendment is to change the zoning classification of particular property.*

   The R2B Two-family District allows single and two-family dwellings and a handful of non-residential uses. However, given the size of the property most of the non-residential uses would not be allowed. The existing mixed-use building containing a grocery store on the first floor and four dwelling units on the upper floor is nonconforming. A nonconforming use may not be changed to any other use, other than a use permitted in the district, unless granted approval for a change of nonconforming use. Although some reasonable use of the property is allowed in the R2B Two-family District, the R2B zoning classification does not allow for the conversation of the grocery store to a restaurant.

5. *Whether there has been a change in the character or trend of development in the general area of the property in question, which has taken place since such property was placed in its present zoning classification, where the amendment is to change the zoning classification of particular property.*

   The surrounding area is and has primarily remained a low-density residential area.

VARIANCE

The Department of Community Planning and Economic Development has analyzed the application of the enclosed building standards to allow outdoor grilling based on the following findings:

1. *Practical difficulties exist in complying with the ordinance because of circumstances unique to the property. The unique circumstances were not created by persons presently having an interest in the property and are not based on economic considerations alone.*

   As part of the restaurant, the applicant is proposing to grill food outdoors. The zoning code requires that all production, processing, storage, sales, display or other business activity occur within a completely enclosed building. Practical difficulties exist in complying with the ordinance because of circumstances unique to the property. The applicant is proposing to utilize a gas grill that cannot be utilized indoors. The building on the site is configured in the shape of a "C". The applicant is proposing to locate the grill towards the interior of the building where it would be surrounded by the building itself.

2. *The property owner or authorized applicant proposes to use the property in a reasonable manner that will be in keeping with the spirit and intent of the ordinance and the comprehensive plan.*

   The variance request is reasonable and in keeping with the spirit and intent of the ordinance and the comprehensive plan. Enclosed building regulations are established in order to promote the orderly development and use of land, to protect and conserve the natural environment, to minimize conflicts among land uses, and to protect the public health, safety and welfare. The intent of prohibiting outdoor grilling is to prevent obnoxious grilling odors and smoke from dissipating into public areas and residential properties. Given the configuration of the building the grill will be screened from the adjacent residential properties by the building itself. The proposed location of the

outdoor grill reduces the potential off-site nuisances of odor and smoke. The applicant had indicated that food would be grilled several times a week during the spring, summer and fall and occasionally during the winter.

3. *The proposed variance will not alter the essential character of the locality or be injurious to the use or enjoyment of other property in the vicinity. If granted, the proposed variance will not be detrimental to the health, safety, or welfare of the general public or of those utilizing the property or nearby properties.*

   Granting the variance would not adversely alter the essential character of the locality or be injurious to the use or enjoyment of other property in the vicinity, nor would it be detrimental to the health, safety, or welfare of the general public or of those utilizing the property or nearby properties. The site is surrounded by single and two-family residences. Residential uses are permitted to grill food outdoors without obtaining a variance of the enclosed building regulations. The subject site is occupied by a mixed use building containing four dwelling units on the upper floor. Given where the grill is proposed to be located no detrimental impacts to the surrounding area are anticipated.

VARIANCE

The Department of Community Planning and Economic Development has analyzed the application to reduce the minimum drive aisle width from 22 feet to 12 feet 11 inches based on the following findings:

1. *Practical difficulties exist in complying with the ordinance because of circumstances unique to the property. The unique circumstances were not created by persons presently having an interest in the property and are not based on economic considerations alone.*

   The applicant is proposing to locate three parking spaces in the northeast corner of the site along the alley. The drive aisle requirement is 22 feet. The applicant is proposing to have a drive aisle that is 12 feet 11 inches. To make up the difference in the drive aisle width, the applicant has indicated that the 14-foot wide alley would be utilized for maneuvering. Practical difficulties exist in complying with the ordinance because of circumstances unique to the property. In order to meet the parking requirement for the restaurant and the four dwelling units, one additional parking space needs to be added to the site. Given the location of the existing structures on the site, providing the additional parking in the northeast corner of the site is the most practical. Since the parking spaces would be located near the public alley, it is also practical to utilize it for maneuvering purposes in order to reduce the amount of impervious surface on the site.

   To meet the setback requirements in the C1 zoning district, a five foot setback along the north property line needs to be maintained. Given this, CPED is recommending that there be a five foot wide landscaped yard provided between the parking area and the north property line.

2. *The property owner or authorized applicant proposes to use the property in a reasonable manner that will be in keeping with the spirit and intent of the ordinance and the comprehensive plan.*

   The variance request is reasonable and in keeping with the spirit and intent of the ordinance and the comprehensive plan. Drive aisle width regulations are established to ensure that proper access to off-street parking spaces is provided. Between the on-site drive aisle and the public alley the maneuvering space for the parking spaces will be in excess of 22 feet.

3. *The proposed variance will not alter the essential character of the locality or be injurious to the use or enjoyment of other property in the vicinity. If granted, the proposed variance will not be detrimental to the health, safety, or welfare of the general public or of those utilizing the property or nearby properties.*

Granting of this variance will not alter the essential character of the locality or be injurious to the use or enjoyment of other property in the vicinity. In addition, granting of the variance will not be detrimental to the health, safety, or welfare of the general public or of those utilizing the property or nearby properties. While the drive aisle will be less than 22 feet in width, access to the parking spaces in the northeast corner of the site will not be impeded.

FOR REZONINGS ONLY

ZONING PLATE NUMBER. 10

LEGAL DESCRIPTION. Lots 16 and 17, Eggleston's Rearrangement of Block 12 of Lincoln Street Supplement to East Side Addition to Minneapolis, Hennepin County, Minnesota.

RECOMMENDATIONS

Recommendation of the Department of Community Planning and Economic Development for the Rezoning:

The Department of Community Planning and Economic Development recommends that the City Planning Commission and City Council adopt the above findings and **approve** the rezoning petition for the property located at 1901 Fillmore Street Northeast from the R2B zoning district to the C1 zoning district.

Recommendation of the Department of Community Planning and Economic Development for the Variance:

The Department of Community Planning and Economic Development recommends that the City Planning Commission adopt the above findings and **approve** the application for a variance of the enclosed building standards to allow outdoor grilling located at 1901 Fillmore Street Northeast.

Recommendation of the Department of Community Planning and Economic Development for the Variance:

The Department of Community Planning and Economic Development recommends that the City Planning Commission adopt the above findings and **approve** the application for a variance to reduce the minimum drive aisle width from 22 feet to 12 feet 11 inches located at 1901 Fillmore Street Northeast, subject to the following conditions:

1. There shall be a five foot wide landscaped yard provided between the parking area and the north property line.

ATTACHMENTS

1. Statement of proposed use
2. Variance findings and information
3. Zoning map
4. Survey
5. Plan set – site plan, floor plan and elevations
6. Photos
7. Correspondence

December 11th, 2013

Statement of Proposed Use:

Property address:
1901 Fillmore St. N.E.
Minneapolis, MN 55418

Property ID: 12-029-24 340215
Legal Description: Eggleston's rearrangement of block 12 of Lincoln Street supplement to east side addition to Minneapolis

Rezone to C1 for commercial kitchen/restaurant with beer and wine

December 11th 2014

To Whom It May Concern:

We are applying for an outdoor grilling variance to accommodate 2 outdoor NSF gas grills. I have provided a picture of the grills we are considering. The grills will be in a designated area that will only be used for this use. It is within the property so smoke from the grills will have a minimal effect on the neighborhood.

We plan on grilling several times per week during the Spring, Summer, and Fall, and on occasion during the Winter.

Thank you,

Laura Bonnelli

Re: Variance Request for Grilling

1. The property will be housing a small restaurant and bistro. The restaurant would like to have grilling be an occasional part of its' cooking regime and this would need to be outdoors and adjacent to the kitchen. This would enhance the culinary offering of the restaurant and ultimately the neighborhood.
2. We have designated a grilling area in our plan that is to be used exclusively for that purpose. It is in the back of the building and away from the street and neighbors. Grilling would be done during regular operating hours.
3. The grilling area is not close to any neighbors and is situated well within the property so it is not easily accessible or visible from the street. We will be using NSF grills (see attached) and keep the area contained, clean, and monitored when in use. No grilling accessories or food will be left unattended and the area will be free of utensils when not in use. All fuels will be stored in the locked garage when not in use.

Laura J. Bonicelli December 28, 2014

CROWN VERITY INC

Models

MCB-72	**MCB-36**
MCB-60	**MCB-30**
MCB-48	**CCB-60**

Mobile Outdoor Charbroilers

possible double grill

Specifications

Our grill bodies, legs, cooking grates, burners, under shelves, radiants, water pans, fasteners, pilot tubes, are all 304 series stainless steel for durability and ease of cleaning. Compared to units made of metal or 430 stainless steel – our units will never rust.

15,000 BTUH stainless steel burners are placed every 5.75" to ensure the most even heat pattern possible. These units heat up to cooking temperature within 6 minutes and will reach 800 degrees in 10 minutes. Our stainless steel burners and stainless steel cooking grids are warranted for 10 years!

Each MCB model includes built-in tank holders that accommodate standard 20 lb. propane tanks. Each model is also available with a single gas connection and 25' quick disconnect hose for use with remote tanks. Each MCB model is available as either LP or Natural Gas.

The CCB Club Grill comes with two horizontal 30 lb. propane tanks.

Specification:
Gas grill - must be constructed of 304 Stainless steel – including cooking grids, burners, and all fasteners. Burners to be 304 stainless steel and a minimum 15,000 BTUH per burner. Must have two 14" wheels and two total lock casters. Must ship fully assembled. Minimum of 10 year warranty on cooking grids and burners and minimum of 1 year warranty on complete unit. (MCB) Unit to include tank holder(s) to accommodate 20 lb propane tank(s). (CCB) Unit to include two 30 lb. horizontal propane tanks. Must have storage shelf under unit. Unit to include stainless steel water pan(s) with drain port(s). CGA/AGA/NSF certified.

Standard Features

- All stainless steel construction; including grids, burners, and fasteners.
- CGA/AGA/NSF certified.
- 15,000 BTUH stainless steel burners.
- Stainless steel pilot burner tube system.
- Unibody design for lighter weight and added strength.
- Two 14" wheels and two total lock casters.
- 14 ga. stainless steel radiants that remain in place during transportation and cleaning.
- Tank holder(s) on back of unit that hold 20 lb. propane tank(s).
- Two stage regulator(s) and hose(s) on LP models.
- Lighter and grill cleaner.
- Storage shelf and angled legs for rock solid durability.
- Water pans with drain ports to ease cleaning and eliminate grease fires from occurring.
- Ships completely assembled on a skid. Ready to use.
- Factory technician tested prior to shipping.
- 1 year parts and labor limited warranty.
- 10 year warranty on cooking grids and burners.

Options/Accessories

Roll Dome	Adjustable Bun Rack
Griddle Plate	Steam Pan Adapter
Side Shelf	Front Shelf
Side Burner	Rotisserie
Wind/Splash Guard	Smoker Box
Perforated Grill Plate	Charcoal Tray
Outdoor Cover	Removable Hand Sink
Remote Propane Cart	Propane Tanks

37 Adams Boulevard, Brantford, Ontario N3S 7V8 Phone: (519)751-1800 Fax: (519)751-1802
web site: http://www.crownverity.com **email: info@crownverity.com**

MODEL MCB

CROWN VERITY INC

Specifications

Model	MCB-30	MCB-36	MCB-48	MCB/CCB-60	MCB-72
Number of Burners	4	5	6	8	10
BTUH	64,500	79,500	99,000	129,000	159,000
Actual Weight (lbs.)	127	143	176	215	253
Gas Connections (LP)*	1	1	2	2	2
Shipping Weight (lbs.)	209	225	258	297	335
Cooking Surface Dimensions	28"L X 21"D	34"L X 21"D	46"L X 21"D	58"L X 21"D	70"L X 21"D
Overall Dimensions	38"L X 28"D X 36"H	44"L X 28"D X 36"H	56"L X 28"D X 36"H	69"L X 28"D X 36"H	81"L X 28"D X 36"H

*All units are available in natural gas models MCB-NG. All natural gas models come with a single gas connection and a 10 ft. quick disconnect hose.

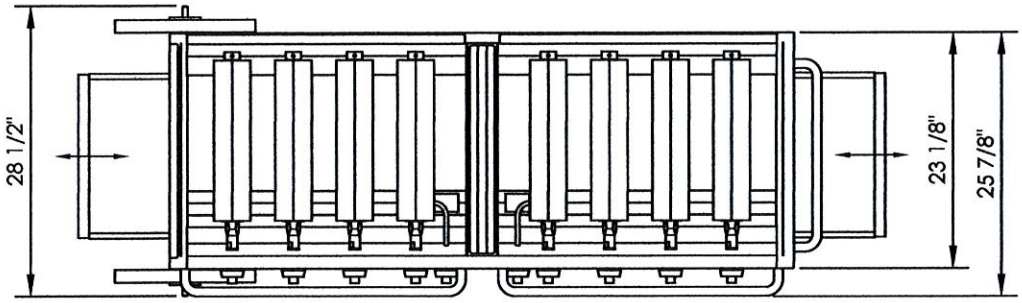

MCB-	"X"
30	38"
36	44"
48	56"
60	69"
72	81"

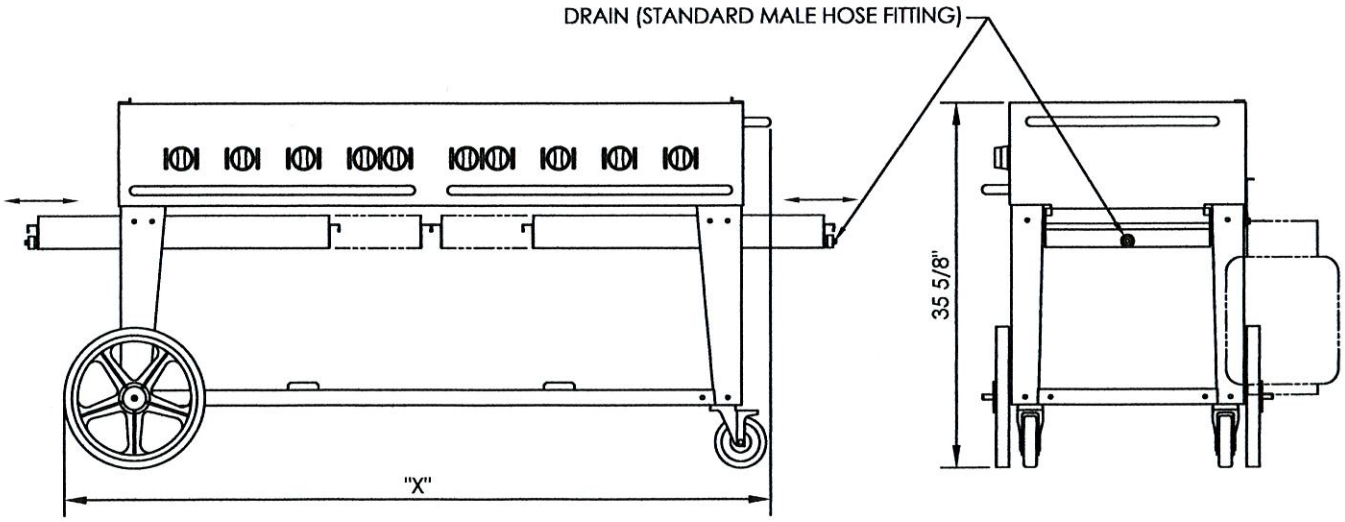

Re: Variance Request for Drive Aisle

(1). We are planning on adding 4 parking spaces next to the alley, which would then total 10 parking spots. With doing this we would still enough green space, and an additional 2 spots above the 8 required. The drive isle is not wide enough to allow for this which is why we're applying for the variance

(2). We feel that the additional parking would have a positive impact with the neighborhood, because it would lessen the amount of street parking and will overall increase the safety of the neighborhood with a more secure place to park.

(3). Because the location is behind the property it will not have a physical impact on the building. This proposal will also not have a negative affect the health, safety, or welfare of the general public or anyone utilizing the building, or adjacent properties in the neighborhood.

Laura Bonicelli December 28, 2014

Laura Bonicelli **1st**

NAME OF APPLICANT WARD

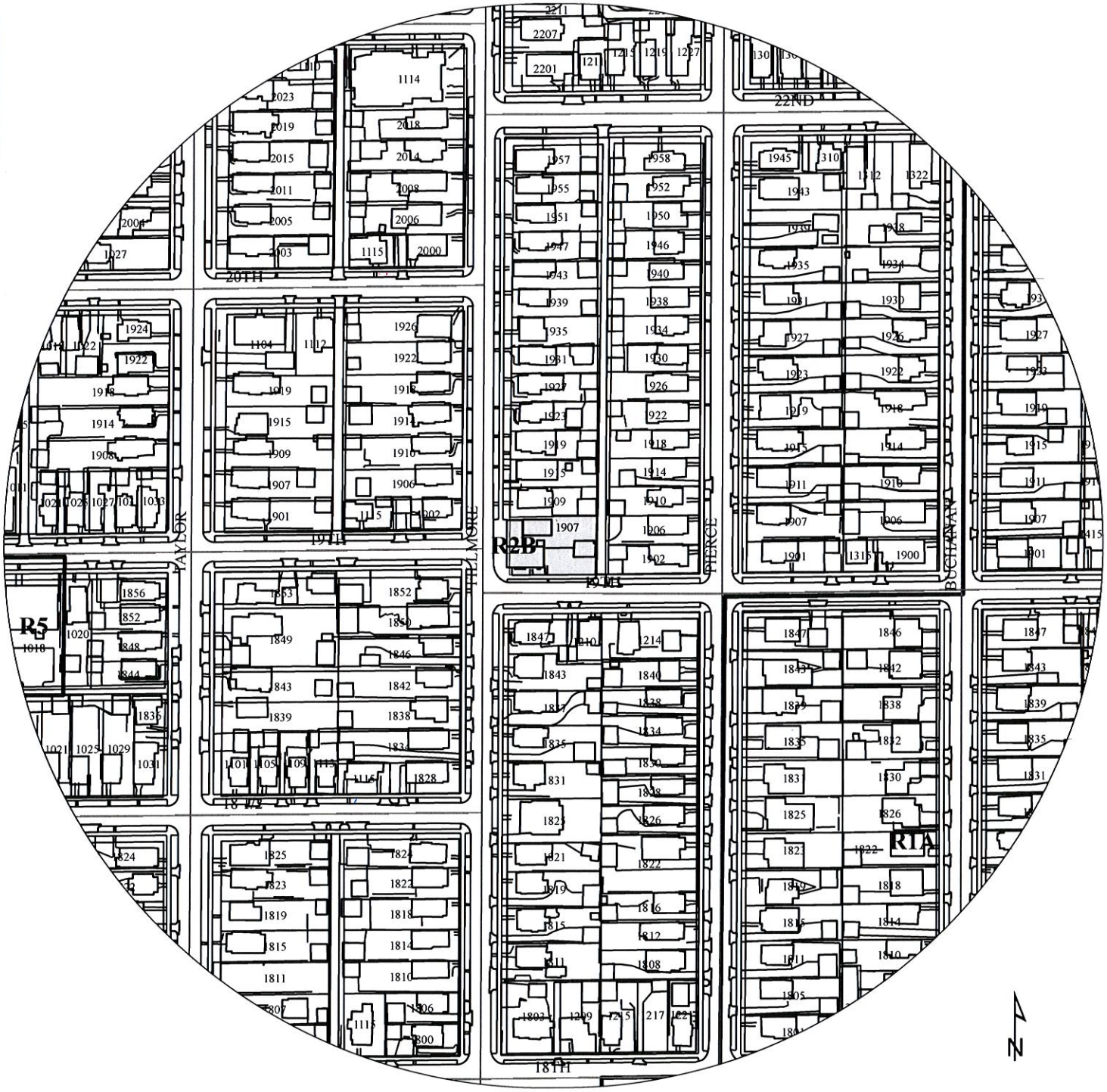

200 100 0 200 400

PROPERTY ADDRESS

1901 Fillmore Street Northeast

FILE NUMBER

BZZ-6963

BOUNDARY & TOPOGRAPHIC SURVEY FOR:
STUDIO M DESIGN

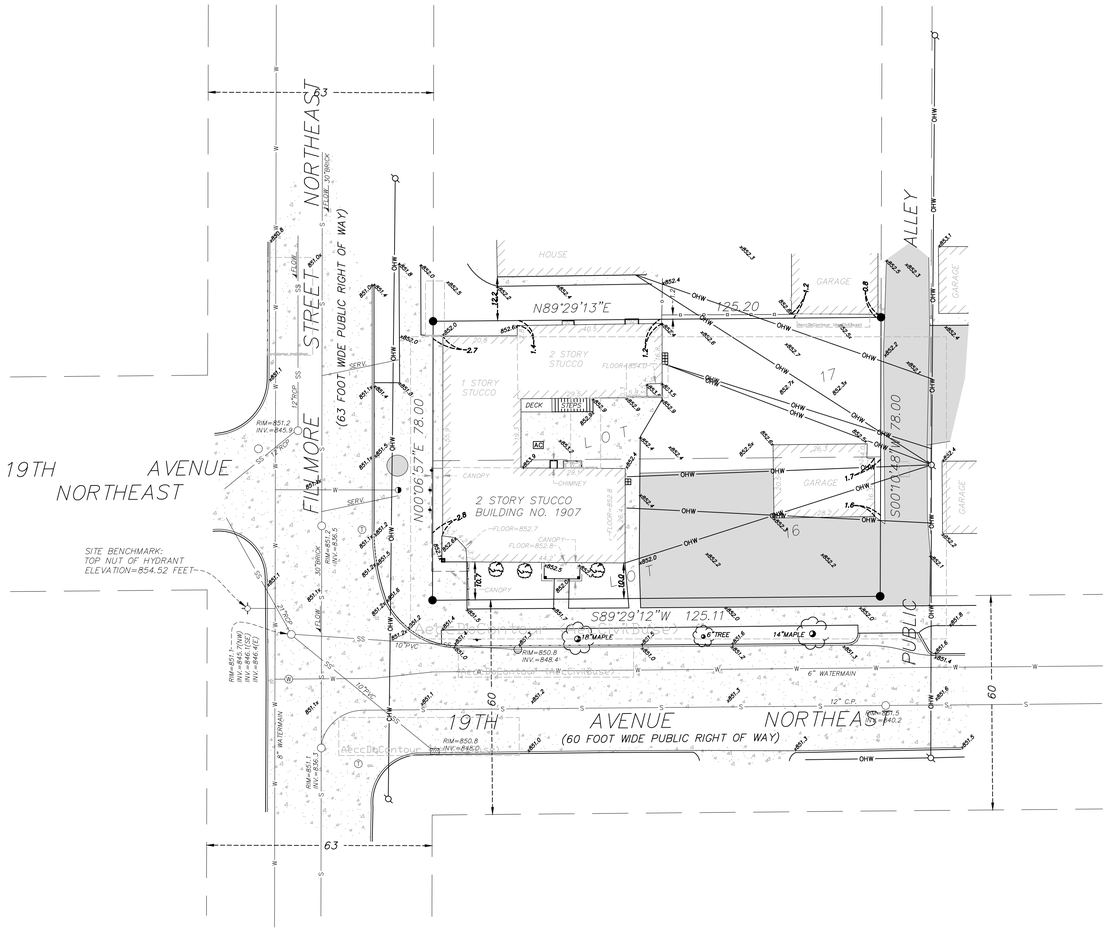

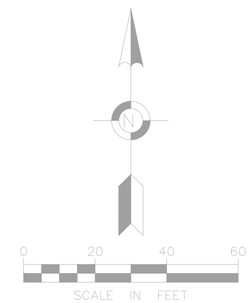

- FOUND IRON MONUMENT
- SET 5/8 INCH IRON REBAR MARKED BY LICENSE NO. 22033
- SET DRILL HOLE IN CONCRETE

LEGEND

- MANHOLE
- CB OR CATCH BASIN
- WATER MANHOLE
- HYDRANT
- STOP BOX
- AC AIR CONDITIONER
- ELECTRIC METER
- UTILITY POLE
- TELEPHONE MANHOLE
- SIGN
- W WINDOW WELL
- BIKE RACK
- CHAIN LINK FENCE
- IRON FENCE
- WOOD FENCE
- SANITARY SEWER
- STORM SEWER
- WATERMAIN
- OVERHEAD WIRE
- x851.5 SPOT ELEVATION
- 851 EXISTING CONTOUR LINE
- SHRUB
- TREE
- BITUMINOUS SURFACE
- CONCRETE SURFACE

LEGAL DESCRIPTION:

(Per Hennepin County Property Information Web Site)

Lots 16 and 17, Eggleston's Rearrangement of Block 12 of Lincoln Street Supplement to East Side Addition to Minneapolis, Hennepin County, Minnesota.

NOTES:

1. The orientation of this bearing system is based on the Hennepin County Coordinate Grid (NAD 83–96 Adj.).

2. The total area of the property described hereon is 9,762 square feet or 0.224 acres.

3. No title work was provided in the preparation of this survey to verify ownership, the legal description, or the existence of any easements or encumbrances to the property.

4. The property described hereon does not lie within a flood hazard area per Federal Insurance Rate Map No. 27053 C 0240 E, which is an unprinted panel for Community No. 27123.

5. Existing utilities, services and underground structures shown hereon were located either physically, from existing records made available to us, by resident testimony, or by locations provided by Gopher State One Call, per Ticket Nos. 143420633. However, lacking excavation, the exact location of underground features cannot be accurately, completely and reliably depicted. Where additional or more detailed information is required, the client is advised that excavation may be necessary. Other utilities and services may be present and verification and location of all utilities and services should be obtained from the owners of the respective utilities prior to any design, planning or excavation.

6. BENCHMARK: Top nut of the hydrant located in the southwest quadrant of Fillmore Street Northeast and 19th Avenue Northeast. Elevation = 854.52 feet (NAVD 88) Per MNDOT VRS Network.

CERTIFICATION:

I hereby certify that this survey was prepared by me or under my direct supervision and that I am a duly Licensed Land Surveyor under the laws of the State of Minnesota.

Date of survey: December 9, 2014.
Date of signature: December 12, 2014.

_____
Lee J. Nord
Minnesota License No. 22033

FIELD BOOK	PAGE
2785	61

DRAWING NAME: (Rtext (Rtext))
JOB NO. 36146
FILE NO. 2763

FIELDWORK CHIEF: L.S.
DRAWN BY: kgf
CHECKED BY: L.J.N.

REVISIONS

NO.	DATE	DESCRIPTION

BOUNDARY & TOPOGRAPHIC SURVEY

SURVEY FOR: STUDIO M DESIGN

PROPERTY ADDRESS: 1907 FILLMORE STREET NORTHEAST MINNEAPOLIS, MINNESOTA 55413

Egan, Field & Nowak, Inc.
land surveyors since 1872
1229 Tyler Street NE, Suite 100
Minneapolis, Minnesota 55413
PHONE: (612) 466–3300
FAX: (612) 466–3383
WWW.EFNSURVEY.COM

COPYRIGHT © 2014 By EGAN, FIELD & NOWAK, INC.

Printed 12/12/2014 at 11:09 AM by StudioM

STUDIO M ARCHITECTS, INC.
530 NORTH 3RD STREET, SUITE 230
MINNEAPOLIS, MINNESOTA 55401

P. 612.524.5375
F. 612.844.1240

WWW.STUDIOMARCHITECTS.NET

Bonicelli

FRESH MEAL DELIVERY

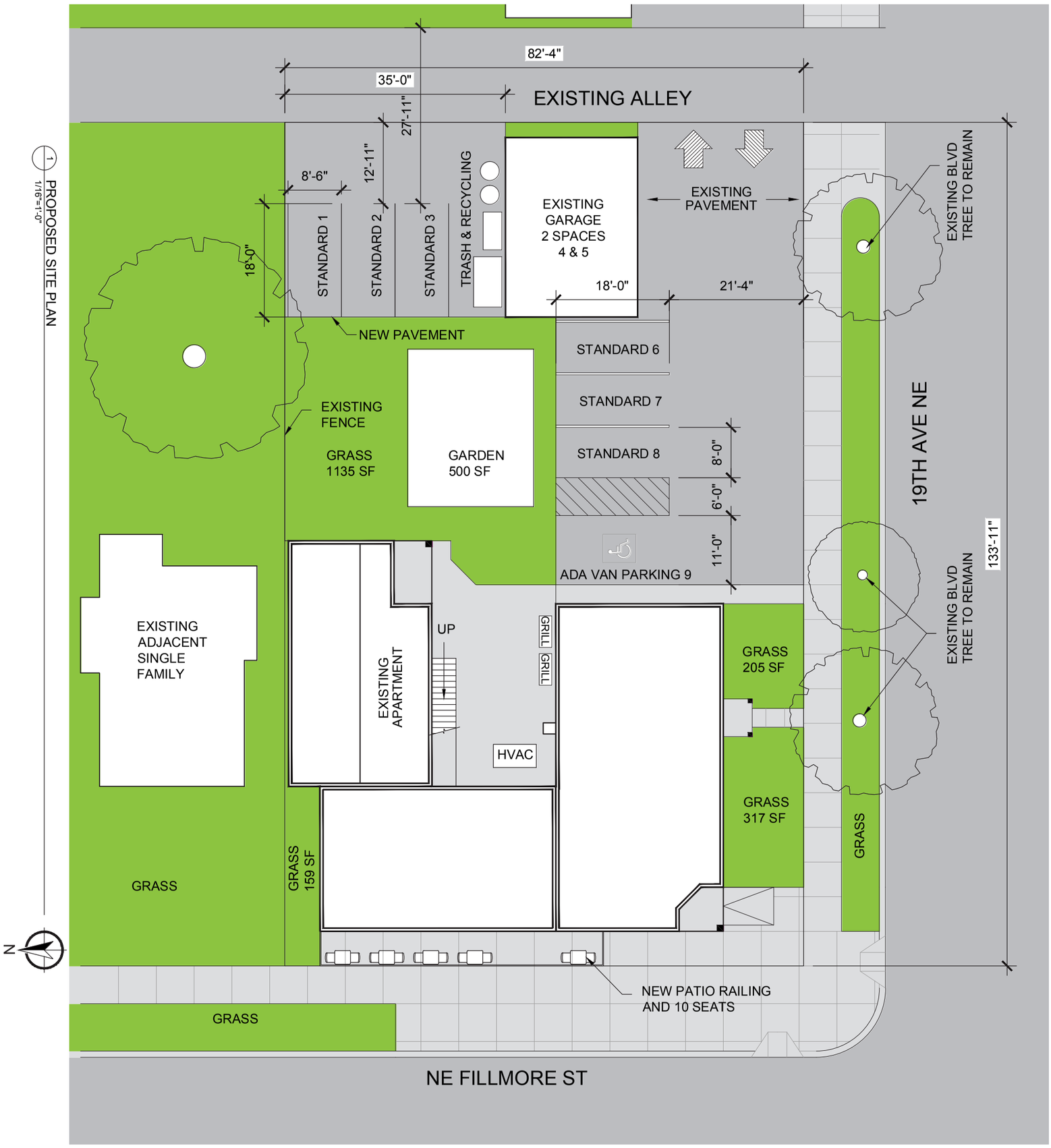

Proposed Site Plan

12 December 2014

STUDIO M ARCHITECTS, INC.
530 NORTH 3RD STREET, SUITE 230
MINNEAPOLIS, MINNESOTA 55401

P. 612.524.5375
F. 612.844.1240

WWW.STUDIOMARCHITECTS.NET

Bonicelli

FRESH MEAL DELIVERY

FLOOR PLAN DATA

GROSS SQUARE FOOTAGE: 2200 SF

DINING ROOM SQUARE FOOTAGE: 619 SF
NUMBER OF SEATS: 40
PATIO NUMBER OF SEATS: 10

RETAIL AREA SQUARE FOOTAGE: 196 SF

FLOOR PLAN LEGEND

EXISTING WALLS.

NEW WALLS.

FLOOR PLAN KEY NOTES

1. NEW OPERABLE FRENCH WINDOW IN THIS LOCATION. SEE ELEVATION.
2. NEW FRENCH DOOR IN THIS LOCATION. SEE ELEVATION.
3. EXISTING HVAC UNIT TO REMAIN.
4. EXISTING CONCRETE STOOP TO REMAIN. STOOP IS APPROXIMATELY 6 INCHES ABOVE GRADE LEVEL.
5. NEW ACCESSIBLE RAMP IN THIS LOCATION.
6. NEW MOVEABLE METAL RAILING IN THIS LOCATION.
7. NEW GRILL IN THIS LOCATION.
8. UNISEX ADA RESTROOM.
9. INFILL AT EXISTING DOOR OPENING TO BE REMOVED AND NEW DOOR TO BE PROVIDED.
10. ENTRANCE TO APARTMENTS ABOVE TO REMAIN.

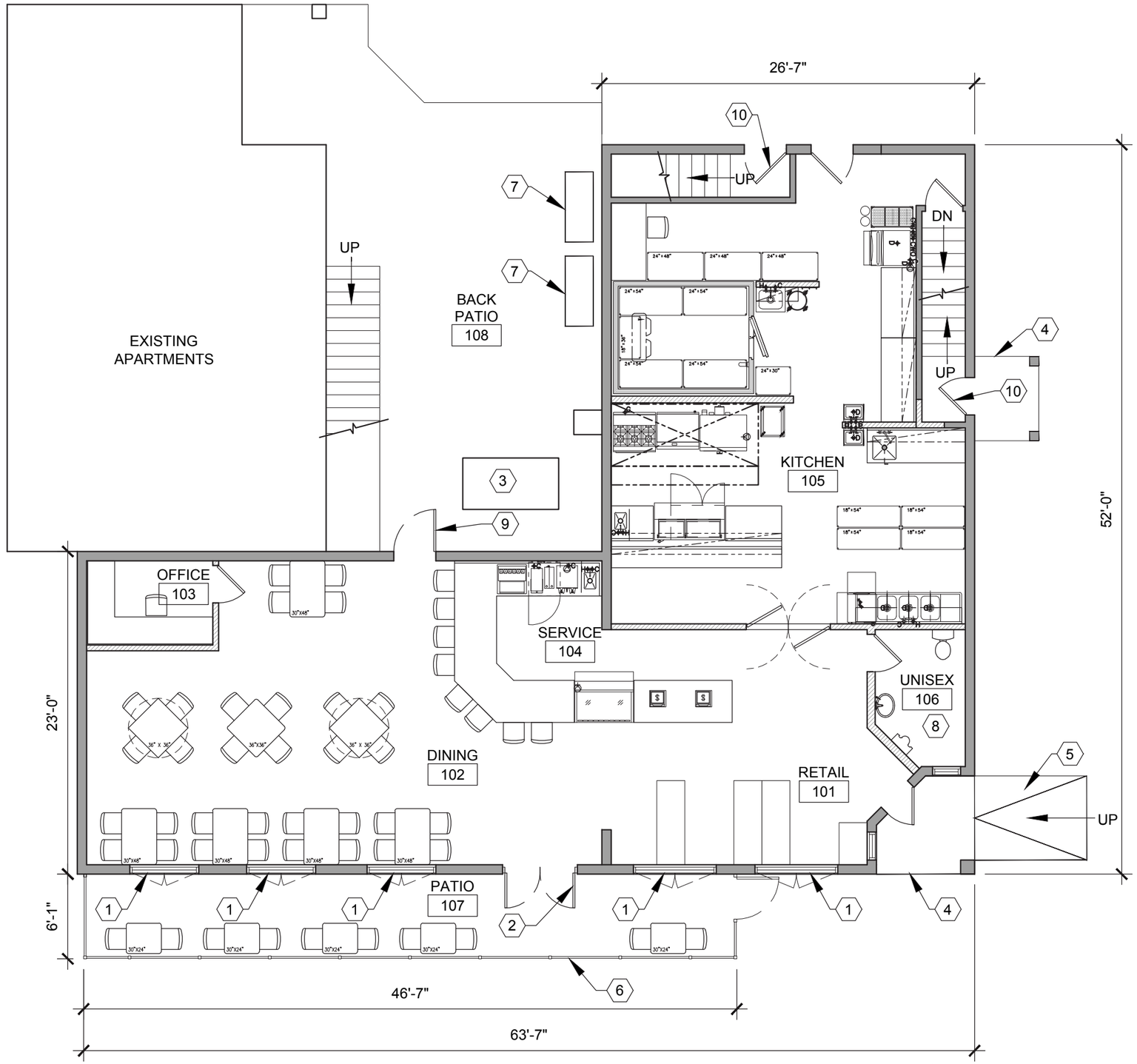

1 MAIN FLOOR PLAN
1/8"=1'-0"

12 December 2014

RESTAURANT EQUIPMENT COMPANY
PREMIER
Foodservice Design Specialists
7120 NORTHLAND TERRACE, MINNEAPOLIS, MN 55428
(763) 544-8800 : FAX (763) 544-7949 : WWW.PREMIEREQ.COM

Bonicelli

FRESH MEAL DELIVERY

STUDIO M ARCHITECTS, INC.
530 NORTH 3RD STREET, SUITE 230
MINNEAPOLIS, MINNESOTA 55401
P. 612.524.5375
F. 612.844.1240
WWW.STUDIOMARCHITECTS.NET

Proposed Floor Plan

EXISTING SOUTHWEST PERSPECTIVE

PROPOSED SOUTHWEST PERSPECTIVE

EXISTING SOUTHEAST PERSPECTIVE

PROPOSED SOUTHEAST PERSPECTIVE

12 December 2014

Bonicelli

FRESH MEAL DELIVERY

Proposed Exterior Modifications - Before & After

STUDIO M ARCHITECTS, INC.
530 NORTH 3RD STREET, SUITE 230
MINNEAPOLIS, MINNESOTA 55401

P. 612.524.5375
F. 612.844.1240

WWW.STUDIOMARCHITECTS.NET

1 PROPOSED WEST ELEVATION
1/8"=1'-0"

2 PROPOSED SOUTH ELEVATION
1/8"=1'-0"

12 December 2014

Bonicelli
FRESH MEAL DELIVERY

Proposed Exterior Elevations

STUDIO M ARCHITECTS, INC.
530 NORTH 3RD STREET, SUITE 230
MINNEAPOLIS, MINNESOTA 55401
P. 612.524.5375
F. 612.844.1240
WWW.STUDIOMARCHITECTS.NET

STUCCO COLOR - SW 7528 “WINDSOR GRIEGE”

NEW EXTERIOR SCONCES - COOPER INDUSTRIES
“WESTWOOD 716-2” BRONZE FINISH

TRIM COLOR - SW 6069 “FRENCH ROAST”

CUSTOM FABRIC PATTERN AT RECTANGULAR AWNING

UPSTAIRS SHUTTER COLOR - SW 6923 “FESTIVAL GREEN”
**BUBBLE AWNING FABRIC COLOR TO MATCH

AWNING DOWNLIGHTS - COOPER INDUSTRIES “CAMBRIA-920”
BRONZE FINISH

12 December 2014

Bonicelli
FRESH MEAL DELIVERY

Proposed Material Palette

STUDIO M ARCHITECTS, INC.
530 NORTH 3RD STREET, SUITE 230
MINNEAPOLIS, MINNESOTA 55401
P. 612.524.5375
F. 612.844.1240
WWW.STUDIOMARCHITECTS.NET

From: **Laura Bonicelli** laura@bonicellicooks.com
Subject: Re: 1901 Fillmore St NE
Date: December 10, 2014 at 5:30 PM
To: Reich, Kevin A. Kevin.Reich@minneapolismn.gov

Thanks Kevin,

Just so you have the exact specifics and I document giving them to you:
We are applying to rezone the 1901 Fillmore St. N.E. property to the C1 District. We will also be seeking a variance for outdoor grilling.

The owner, Ryan Hopper has been approved by the WPCiA for a $50,000.00 loan to renovate the outside of the property. As you can imagine,
they were very excited about the loan and the faith that the community is putting in the project.

Here's his contact info:
Ryan Hopper
2701 Garfield St. N.E.
Minneapolis, MN 55418
612.868.1232

Thanks again and I look forward to discussing this further!

Laura

Laura Bonicelli Chef/Owner
http://bonicellicooks.com/
612.812.3332
laura@bonicellicooks.com

On Dec 10, 2014, at 5:22 PM, Reich, Kevin A. <Kevin.Reich@minneapolismn.gov> wrote:

> Laura,
>
> This email is to confirm that I have been fully apprised of your plans for the development of a restaurant at 1901 Fillmore St NE, the former B-Line Grocery in the Windom Park neighborhood, and I am completely in support of those plans. I understand that you have done significant outreach to the neighborhood and have the support of the neighborhood association as well.
>
> Regards,
> Kevin Reich
>
> Kevin Reich
> Council Member, Ward One
> City of Minneapolis
> 350 S. 5th Street, Room 307
> Minneapolis, MN 55415-1383
> Kevin.reich@minneapolismn.gov

From: **Windom Park Citizens in Action (WPCiA)** info@windompark.org
Subject: Rezoning Process - 1901 Fillmore St. NE
Date: December 10, 2014 at 3:03 PM
To: Hopper, Ryan (ES) Ryan.Hopper@ADP.com, laura@bonicellicooks.com
Cc: Kevin.Reich@minneapolismn.gov

Dear Ryan and Laura,

Please consider this e-mail as confirmation that you and the Windom Park Citizens in Action (WPCiA) neighborhood group have been working together to discuss redevelopment of the B-Line Store site at 1901 Fillmore St. NE in our neighborhood.

We appreciate the many WPCiA meetings you have attended to explain this project and the various steps involved in it. As you know, WPCiA has approved a commercial loan of $50,000 for the project (exterior work), and that is now in the final vetting stages at our loan administrator. As we've discussed, we look forward to next seeing you at a WPCiA neighborhood meeting to review and vote on the rezoning before your public hearing at the city level.

We appreciate all of your efforts to keep us apprised of this project and the steps involved.

Gayle Bonneville
Windom Park Citizens in Action (WPCiA) Program Coordinator
1845 Stinson Parkway, #201 and #203
Minneapolis, MN 55418
(612) 788-2192
www.windompark.org

WPCiA APPLICATION FORM

Provide details on extra sheets as needed. Send completed applications only, along with this cover sheet and all accompanying materials to:

Windom Park Citizens in Action
2314 Lowry Ave. NE
Minneapolis, MN 55418
or
info@windompark.org

1. Name of Applicant: Ryan Hopper
2. Address of Applicant: 2701 Garfield St. N.E
3. Address of Project: 1901 Fillmore St. N.E.
4. Telephone Number of Applicant: 612.868.1232
5. E-mail Address of Applicant Ryan.Hopper@ADP.com
6. Physical Description of Project (include drawings/sketches, product detail submittals, etc. that clearly describe the project scope) see attached
7. Describe how the project meets neighborhood goals or otherwise benefits the community.
   The renovation of the property will transform the B-line from an eyesore into a community jewel.
8. Describe how WPCiA funds will be used.
   New windows,roofing,lighting,landscaping, garden, signage, bike racks, composting bins
9. Describe sources and amount of other financing to be leveraged for this project. Applicant must show that WPCiA funds will be matched 1:1 with funds from non-WPCiA source(s).
   Owner will be refinancing existing loans based on residential property improvements and using personal assets.
10. Describe any city, county or state permitting needed, including rezoning, Conditional Use Permits or variances. The city will rezone the property to C1. Tenant will apply for a license to operate a restaurant/commercial kitchen and a license for sidewalk seating. Grilling variance.
11. Describe project timeline, indicating that applicant is ready to implement the project upon approval of WPCiA loan. (Project must be completed within 120 days of loan approval.)
    Renovation is scheduled to begin on January 1st, 2015. Tenant will occupy the property upon completion of the kitchen. We are estimating April 30th at the latest.

The following will be used by WPCiA to evaluate applicants/projects based on a points system. Not all items will be applicable to each project or applicant, nor are all required for approval. Please write "N/A" if the item does not apply to you or your project. (Must receive minimum 10 out of 19 possible points for approval.)

12. Describe applicant's community involvement. Example: Applicant is active in a Minneapolis neighborhood organization, has a program to hire high school students in the summer, or supports local schools or community groups financially or with volunteer time. **(1 point)**
    Applicant is a member of the N.E.Exchange Club.
13. Describe how project will improve energy savings/efficiency. Must indicate "before" to use as baseline and "after" to show improvement. For example: It is not sufficient to say roof insulation will be added unless it can be shown that there is inadequate roof insulation currently. **(1 point)**
    Replacing antiquated roof and windows with energy efficient insulated options.
14. Describe how project incorporates "green/sustainable" practices – one point possible for each valid item; maximum of three points. Examples include but are not limited to: solar panels, green roof, permeable paving, rain garden, locally sourced materials manufactured less than 500 miles away, recycled/reclaimed materials. **(1-3 points)**
    We will install a rain garden and compost station for the restaurant and other tenant properties sourced thru localvendors.
15. Does the project involve an architect? **(1 point)**
    Yes.
16. Describe how the project improves aesthetic appeal, safety and accessibility of secondary (rear) entrance if the site includes parking beside or behind the building. **(1 point)**
    The back yard will be developed into a garden with attractive lighting * in the garden and by the entrances.
17. Describe how project improves street amenities such as lighting, bike parking, benches, and decorative trash receptacles. **(1 point)**
    We intend to add lighting, bike parking, outdoor seating and path.
18. Describe how or if the project utilizes a vacant property and/or seeks to improve a problem property. **(1 point)** The B-line is will be transformed from a liability into an asset that the neighborhood will embrace instead of ignore.
19. Has the project been presented by the applicant at a WPCiA neighborhood meeting or is it scheduled for presentation? **(1 point)**
    Yes, it was presented in at the August 6th and discussed again at the September meeting.
20. Describe how funding from the WPCiA Commercial Loan Program leverages <u>the owner's</u> capital (cash) or bank loan. **(1 point)** The WPCiA Loan will allow us to make better decisions in materials and the overall aesthetic finishing of the property.
21. Describe how funding from WPCiA's Commercial Loan Program leverages other <u>non-bank</u> funding sources. **(1 point)** In addition to the above, we will not have to work in stages (as cash becomes available) to complete the exterior improvements.
22. Describe how materials used in the project are documented as durable and long-lasting and/or can be repaired/renewed. (Long-lasting materials are defined as having a material and/or

installation warranty of over 20 years, or the material is expected to last at least 30 years with minimal maintenance, such as aluminum, brick, concrete, stucco. The lifespan of repairable/renewable materials can be extended by painting, sealing, tuck pointing, patching, redashing or similar regular maintenance that does not involve substantial or total replacement. A material such as aluminum or vinyl siding that cannot be repaired if damaged will disqualify applicant from receiving this point.) **(1 point)** We will keep, fix, and maintain the stucco; Replace the roof with high quality maintainable materials and install high quality windows with a long life expectancy.

23. Describe how materials are compatible with the design of the existing infrastructure and appropriate to a commercial building. **(1 point)**

Examples that qualify for this point:

- Storefront windows (principle/street face below 10-foot height) are mostly (over 50% of window square footage) glazed and transparent see-through in and out and not deep tinted or spandrel glass or windows blocked by signage or shelving
- Storefront windows are restored and constructed of materials appropriate to the age of the building
- Upper floor windows are replaced with vinyl, fiberglass or aluminum clad windows that match the original windows, and cladding color is compatible with rest of façade (i.e., not white if façade is brick and rest of trim is dark colored)
- Existing metal façade will be removed and original brick façade is tuck-pointed and restored

Examples that disqualify applicant from receiving point in this category:

- Storefront is mostly opaque (over 50% of square footage)
- Existing windows on upper floors are being replaced with smaller units
- Windows or doors in principle/street façade are barred
- Windows or doors are covered with opaque metal shutters when business is closed

We are replacing small front windows with window/doors that will open the outside to the inside and the inside will be lit invitingly.

24. Describe how project improves street safety through recognized environmental design techniques (such as CPTED, or Crime Prevention Through Environmental Design). **(1 point)**

CPTED will be used in the front lighting and backyard design.

25. Is project located within the Windom Park neighborhood? **(1 point)**

Yes

26. Does applicant live in the Twin Cities metro area? **(1 point)**

Yes

Discretionary Points may be awarded for:

27. Describe how project demonstrates innovation in approach and/or process. **(1 point)**

The objective to create a healthful community dining/shopping experience that involves N.E. residents in the entire property.

28. Describe how business type augments the mix of businesses and/or is currently lacking in northeast Minneapolis. **(1 point)** There is no similar business in N.E. This will be a restaurant/deli/store with take out/indoor and outdoor dining using top quality local/organic ingredients and original chef written recipes.

Windom Park

Commercial Loan Application

Citizens in Action
1845 Stinson Parkway, #201 & #203
Minneapolis, MN 55418
(612) 788-2192
info@windompark.org

The Windom Park Citizens in Action (WPCiA) commercial loan program is for:

- Business property owners (no tenants or contracts-for-deed)
- Exterior work on commercial properties
- Commercial properties located:
  - within the boundaries of the Windom Park neighborhood, i.e., the south side of Lowry Avenue N.E., the east side of Central Avenue N.E., the north side of 18th Avenue N.E., and the city's border on the west side of Highway 88/New Brighton Boulevard, or
  - along a) Central Avenue in northeast Minneapolis extending from 37th Avenue NE south to Broadway Street NE, or b) along Johnson Street NE from St. Anthony Parkway south to 18th Avenue NE, or c) along Lowry Avenue NE from Stinson Parkway west to University Avenue NE.

Interest rate: 2.0 percent **Minimum loan: $5,000** **Maximum loan: $50,000**
Repayment: 1-10 years **Loan due and payable immediately if business moves or leaves for any reason.**
**** Six months must elapse from the time of closing on one loan before the applicant applies for a subsequent loan; cumulative amount any one applicant may receive is $50,000.****

NOTE: Two steps are required under this application process. Step 1 is to apply to WPCiA using this application form. After the applicant is found eligible by WPCiA, applicants will be referred by WPCiA to the loan administrator for Step 2, the financial application/credit review. (In Step 2, applicants will be required to provide a current profit and loss statement, including a cash flow analysis that reflects income is sufficient to cover the loan payments before depreciation; must show no bankruptcy within past 2 years without reasonable explanation, as disclosed in the O&E report; any judgments, collections or liens against the property, as disclosed in the O&E report, must be included in the total loan to value calculation; real estate taxes for the property must be current; a Dunn & Bradstreet Report will be used to evaluate business history and credit rating.) Loans are not approved and work cannot begin until both steps are completed and both applications are approved in writing.

If you are applying for a WPCiA loan for any of the following, STOP. You are NOT eligible under this program:

- Office equipment
- Personnel
- Utilities
- Inventory
- Payment for the owner's or tenant's labor for the performance of rehabilitation
- Administrative fees or developer's fees
- Debt service
- Legal services
- Funds for purchase of property on speculation
- Housing projects (commercial portions of mixed-use developments are eligible)
- Liquor stores or renovations to liquor stores
- Interior renovations/rehab
- Drive-thru and other auto-oriented uses
- Signs, including awnings that feature business name
- Garage doors facing the street
- Tobacco-related uses
- Pawn shops
- Adult-oriented entertainment
- Check-cashing businesses, money-transfer businesses, or pay-day loan businesses
- Projects zoned for C3 and above commercial zones or industrial zones
- Projects/rehabs that do not follow principles in the Central Avenue Design Guidelines and the city's Central Avenue Small Area Plan/Master Plan