Sprint Telecommunications **2nd**

NAME OF APPLICANT WARD

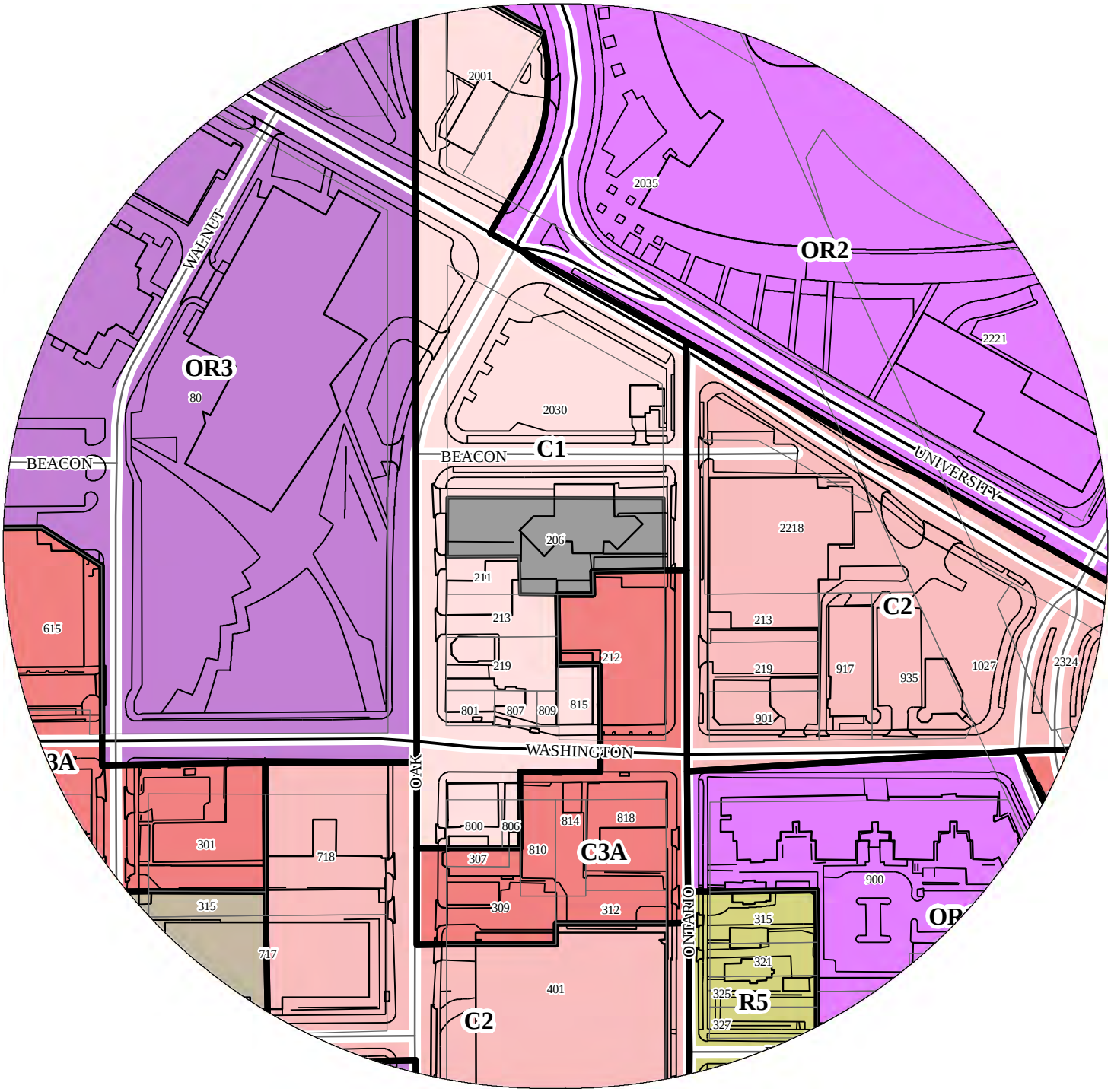

PROPERTY ADDRESS

206 Ontario St SE

FILE NUMBER

BZZ-6816

September 17, 2014

City of Minneapolis
Joe Giant / City Planner- Development of Services
250 S. Fourth Street – Room 300
Minneapolis, MN 55415

RE: Statement of Proposed Use
Site Address: 206 Ontario Street S E
Sprint Temporary Cell-on-Wheels (COW)
Minnesota Vikings Football Season

Dear Mr. Giant:

Haley Law Firm, PLC has been requested by Sprint to obtain all necessary leasing and permitting in order to place a temporary cellular facility on property owned by the City of Minneapolis. The location has been approved by Greg Goeke and Sprint. The aerial location is shown below.

Sprint is proposing to bring in a Cell-on-Wheels "COW" on September 3, 2014 and leave it in place until after the Minnesota Vikings Football Season. The COW will be removed on or before December 30, 2014. The site below is described as follows: 44.974403, -93.226883, 206 Ontario street S E, Minneapolis, MN 55414.

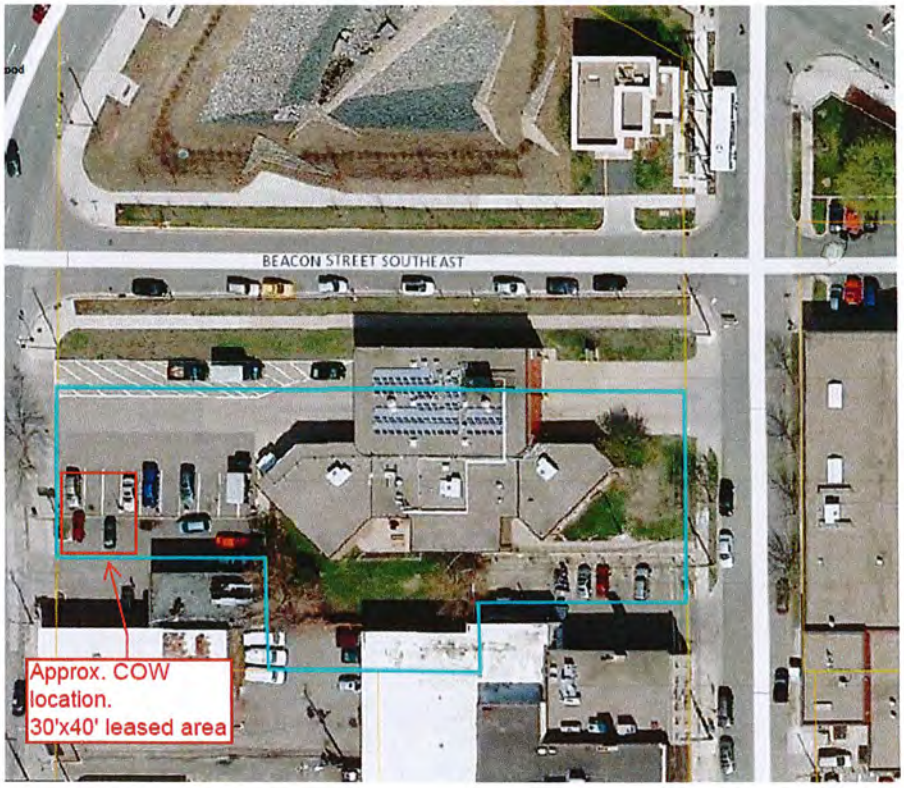

Below is a picture of what the COW looks like when it is parked.

Once the trailer is placed in the appropriate location, the tower is raised and looks like the picture below. The mast is raised to about 65' to 75'.

HALEY LAW FIRM, PLC

City of Minneapolis
Joe Giant / City Planner - Development Services Division
250 S. Fourth Street – Room 300
Minneapolis, MN 55415
City of Minneapolis

RE: STATEMENT ADDRESSING THE INTERIM USE CONDITIONS AND GUARENTEES;

525.450. Interim use conditions and guarantees. (a) *In general.* Any city council approval of an interim use shall be subject to the following conditions:

1. The interim use shall be allowed as a conditional use in the zoning district in which it is to be located. **RESPONSE: Specified site is located in the C1-Neighborhood Commercial District- no response is necessary.**

2. Except as otherwise authorized by this section, an interim use shall conform to this zoning ordinance as if it were established as a conditional use. **RESPONSE: The specified location will comply with all of the conditions and standards of the zoning ordinance.**

3. The date or event that will terminate the interim use shall be identified with certainty. Interim uses many not be granted for a period of greater than five (5) years. **RESPONSE: The COW (Cell on Wheels) will be removed on or before December 30, 2014.**

4. In the event of a public taking of property after the interim use is established, the property owner shall not be entitled to compensation for any increase in value attributable to the interim use. **RESPONSE: This is not applicable for this site.**

Thank you,

T.J. Garrett

T.J. Garrett
Site Acquisition

3D VIEW

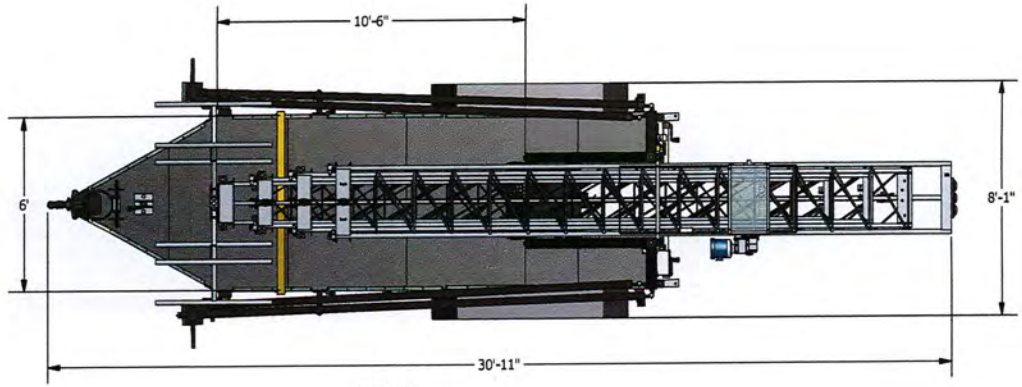

TOP VIEW

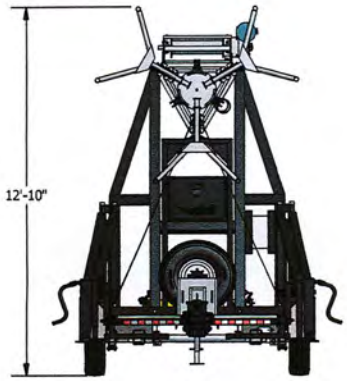

FRONT VIEW

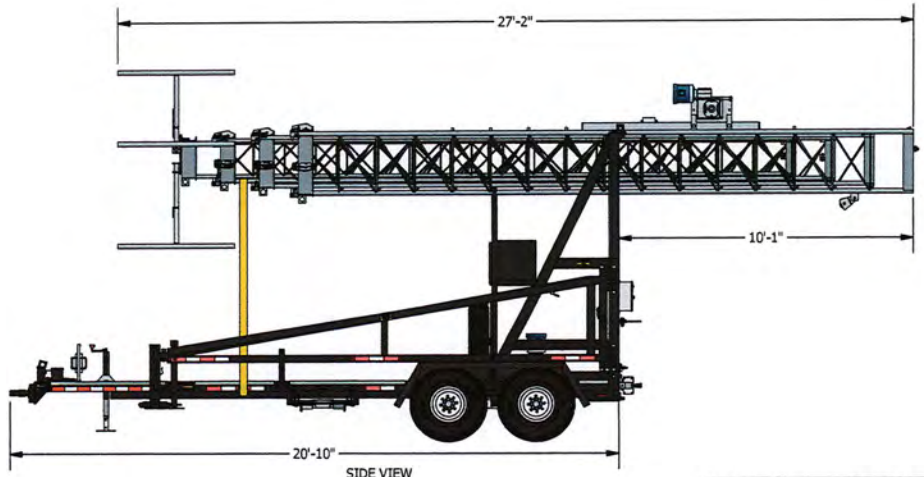

SIDE VIEW

The information contained in this drawing is the property of TowerWorx and is intended only for the use of the addressee. Unauthorized use, disclosure, distribution or copying is strictly prohibited and may be unlawful.

TowerWorx
239 WELCOME CENTER BLVD
LEXINGTON, NC 27295

DRAWN	dsmith	7/12/2012	
Q.A. APPROVED			
MFG. APPROVED			
REVIEWED			
ENG. APPROVED			
CAGE CODE	4W1Q5		

TOLERANCES
Unless Overridden

Linear	Weld Beads
No Note: ±1/8	No Note: ±1/16
MAX: +0 -1/8	MAX: +0 -1/16
MIN: -0 +1/8	MIN: -0 +1/16

FOR REVIEW
Print is in review process - Do not use.

PART NUMBER	100-1-189
PART MATERIAL	
DRAWING NUMBER	100-1-189
DRAWING DESCRIPTION	MAG-60 FOOTPRINT
DWG. REV.	0
SHEET SIZE	B
SHEET NO.	1 of 2

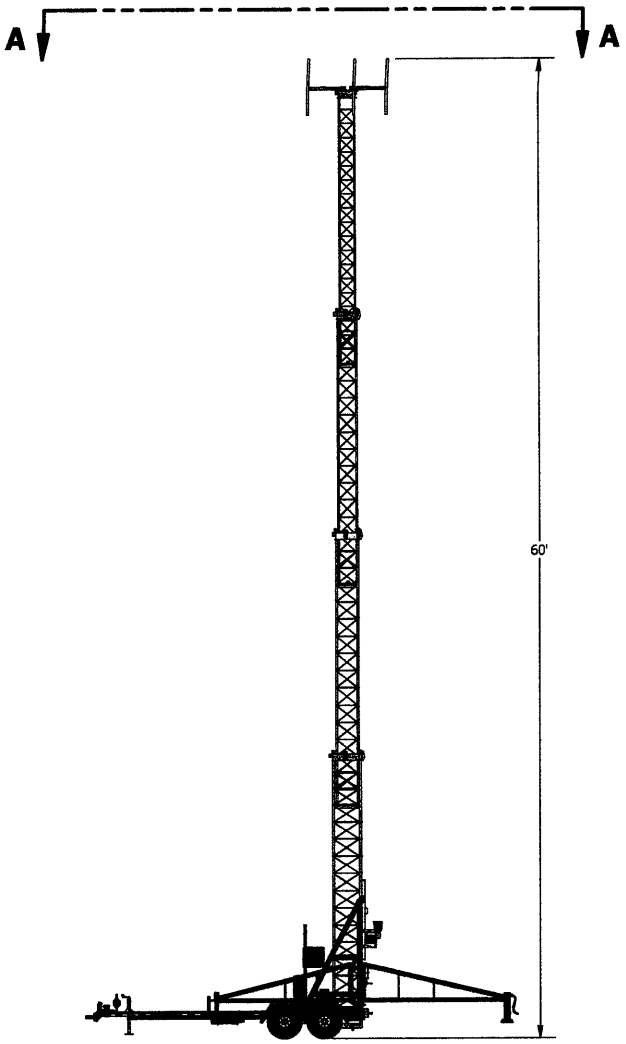

SIDE VIEW

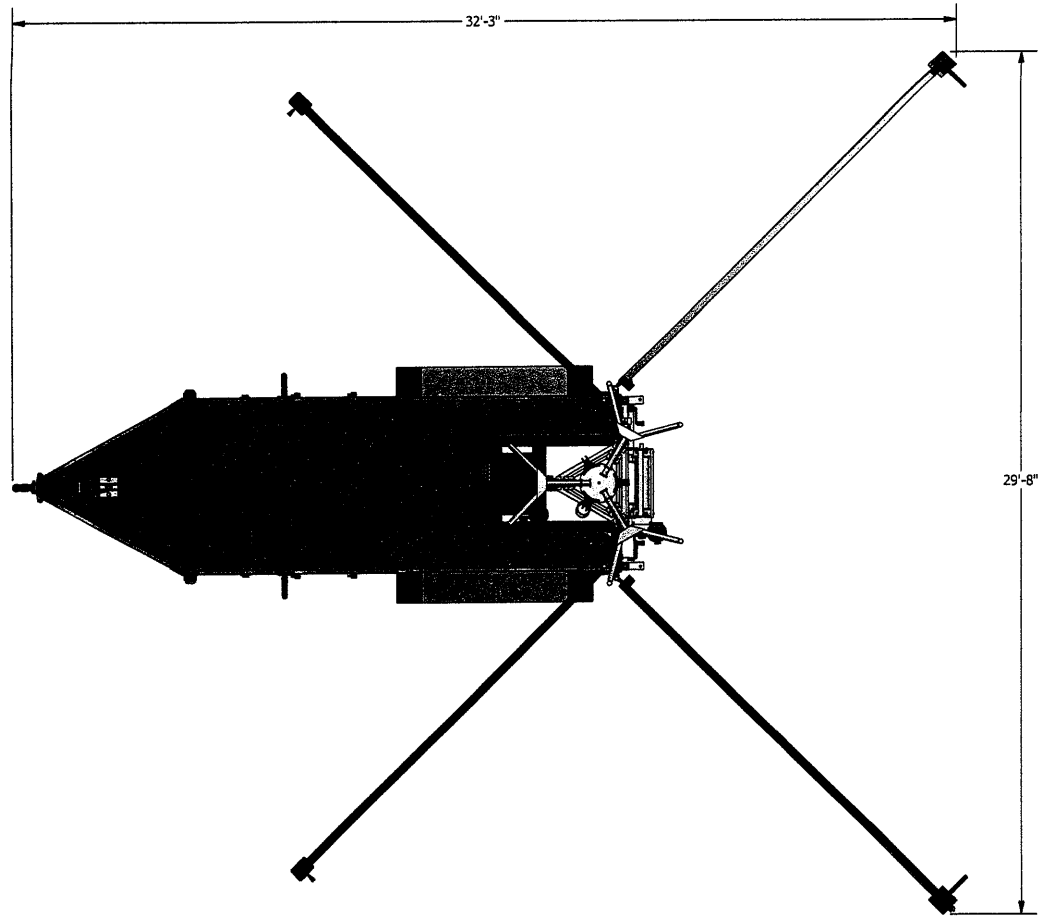

VIEW A-A

The information contained in this drawing is the property of TowerWorx and is intended only for the use of the addressee. Unauthorized use, disclosure, distribution or copying is strictly prohibited and may be unlawful.	TowerWorx 239 WELCOME CENTER BLVD LEXINGTON, NC 27295	DRAWN dsmith	7/12/2012	REVIEWED		TOLERANCES Unless Overridden Linear: No Note: ±⅛; MAX: +0 -⅛; MIN: -0 +⅛ Weld Beads: No Note: ±1/16; MAX: +0 -1/16; MIN: -0 +1/16	**FOR REVIEW** Print is in review process - Do not use.	PART NUMBER 100-1-189	PART MATERIAL
		Q.A. APPROVED		ENG. APPROVED				DRAWING NUMBER 100-1-189	DWG. REV. 0
		MFG. APPROVED		CAGE CODE 4W1Q5				DRAWING DESCRIPTION MAG-60 FOOTPRINT	SHEET SIZE B
									SHEET NO. 2 of 2

The leased area will be 30' x 40', (1,200) square feet. The map below shows the zoning district in which it is located; C1 – Neighborhood Commercial District.

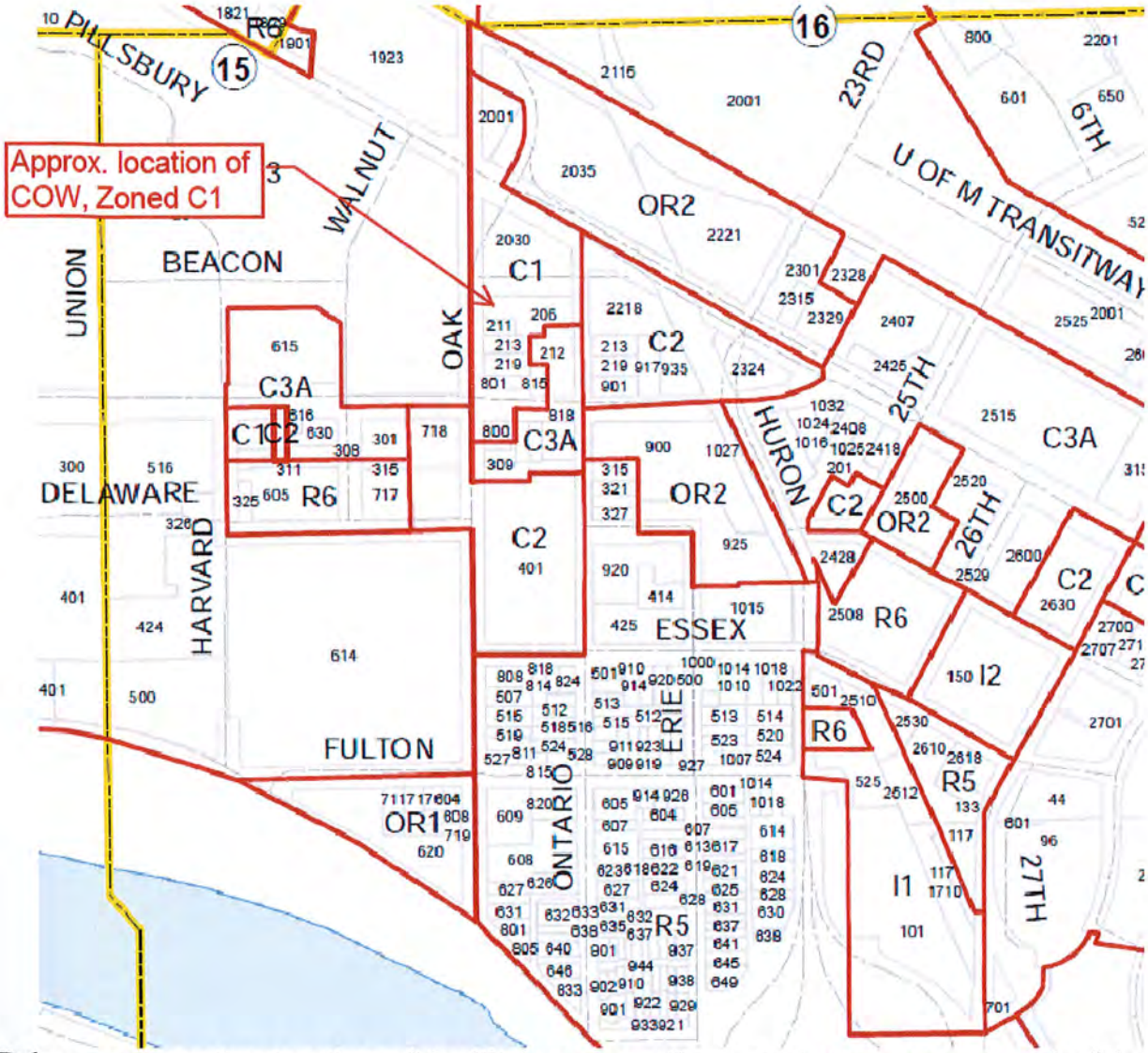

Below are the pertinent sections of the City`s zoning ordinance and our responses to each of the sections in regards to the C1, Neighborhood Commercial District.

548.220. Lot dimension requirements.

The minimum lot area and lot width for all nonresidential uses located in the C1 District shall be as specified in Table 548-2, Lot Dimension Requirements in the Commercial Districts. The minimum lot area and lot width for residential uses located in the C1 District shall be as specified in Table 548-4, Residential Lot Dimension Requirements in the C1 District. **RESPONSE: This requirement has been met.**

548.230. Building bulk requirements.

The maximum height of all principal structures located in the C1 District shall be two and one-half (2.5) stories or thirty-five (35) feet, whichever is less. The maximum floor area ratio of all structures shall be one and seven-tenths (1.7). **RESPONSE: This requirement has been met.**

548.240. General district regulations.

The following conditions govern uses in the C1 District:

(1)

Maximum floor area.

a.

In general. All commercial uses, including shopping centers, and film, video and audio production uses, shall be limited to a maximum gross floor area of four thousand (4,000) square feet per use, except for planned unit developments and as provided in sections b. and c. below. **RESPONSE: The leased area will be 30' x 40', (1,200) square feet.**

b.

Bonus for no parking located between the principal structure and the street. If parking is not located between the principal structure and the street, the maximum gross floor area of a commercial use shall be increased to six thousand (6,000) square feet.

RESPONSE: Not Applicable.

c.

Bonus for additional stories. If parking is not located between the principal structure and the street, and the structure in which the commercial use is located is at least two (2) stories (not including the basement), the maximum gross floor area of a commercial use shall be increased to eight thousand (8,000) square feet.

RESPONSE: Not Applicable.

(2)

Wholesale and off-premise sales. Wholesale and off-premises sales accessory to retail sales shall be limited to two thousand (2,000) square feet of gross floor area or forty-five (45) percent of gross floor area, whichever is less, provided that the main entrance opens to the retail component of the establishment. **RESPONSE: Not Applicable.**

(3)

Drive-through facilities and car washes prohibited. Drive-through facilities and car washes shall be prohibited. **RESPONSE: Not Applicable.**

(4)

Outdoor speakers prohibited. Commercial outdoor speakers shall be prohibited, except when used in conjunction with self-service fuel pumps. Speaker boxes designed to communicate from pump islands shall not be audible from a residence or office residence district boundary or from a permitted or conditional residential use. **RESPONSE: Not Applicable.**

(5)

Fast food restaurants. Fast food restaurants shall be located only in storefront buildings existing on the effective date of this chapter, provided further that no significant changes shall be made to the exterior of the structure and freestanding signs shall be prohibited.
RESPONSE: Not Applicable.

(6)

Automobile convenience facility and minor automobile repair. Automobile convenience facilities and minor automobile repair uses shall not expand beyond the boundaries of the zoning lot existing on the effective date of this chapter, and may not be reestablished if changed to another use.
RESPONSE: Not Applicable.

(2011-Or-034, § 2, 4-1-2011; 2012-Or-012, § 3, 3-8-2012; 2013-Or-250, § 3, 12-13-2013)

548.250. Truck and commercial vehicle parking for nonresidential uses.

Outdoor parking of trucks and other commercial vehicles shall be limited to operable, single rear axle vehicles of not more than fifteen thousand (15,000) pounds gross vehicle weight. All outdoor parking of trucks shall be screened from view, as specified in this zoning ordinance.
RESPONSE: This requirement has been met; the vehicle is less than 15,000 pounds in weight.

The Site is described as follows: 44.974403, -93.226883, 206 Ontario Street S E, Minneapolis, MN 55414.

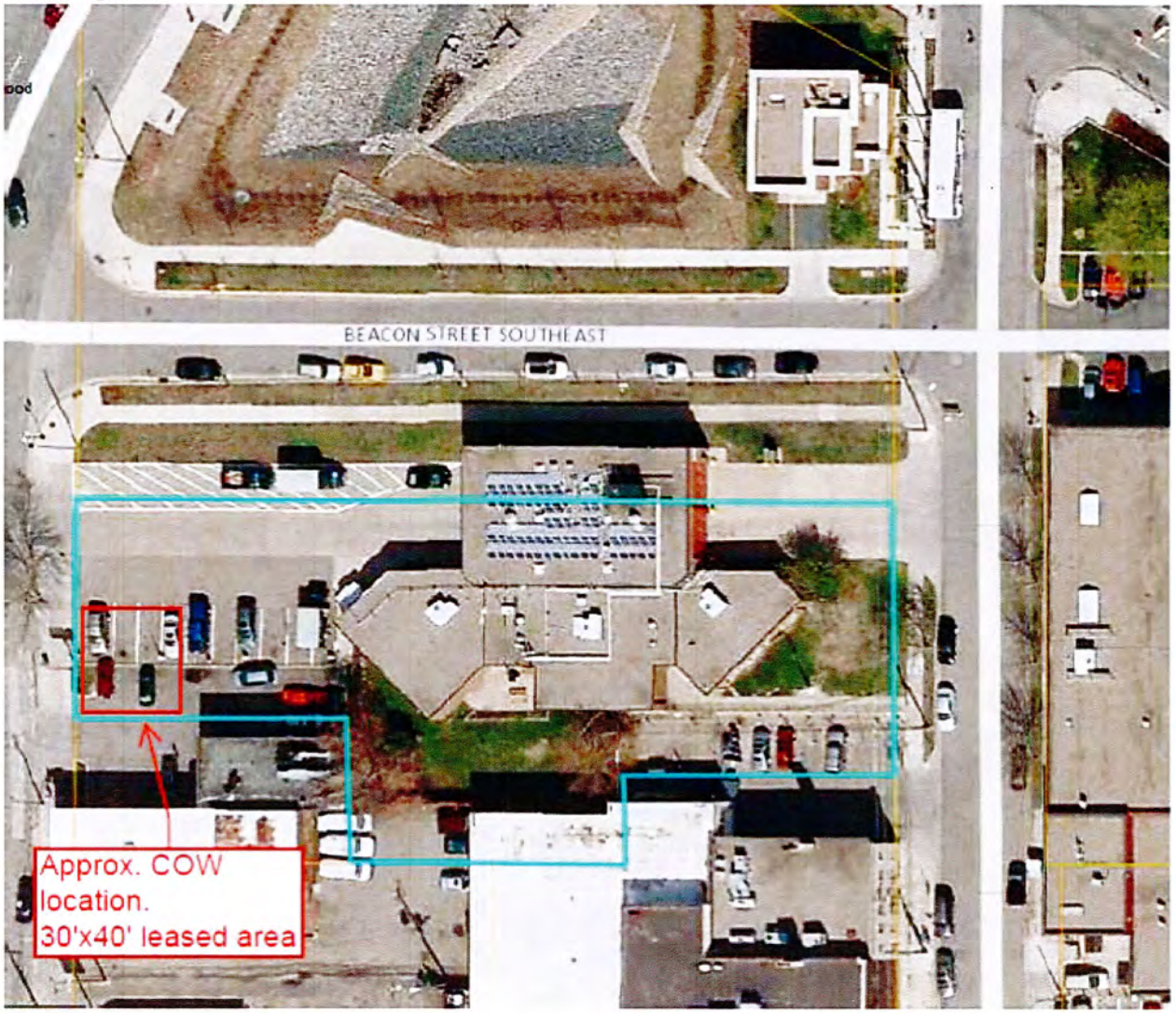

MPLS
FIRE DEPT
PARKING
ONLY
TOW
AWAY

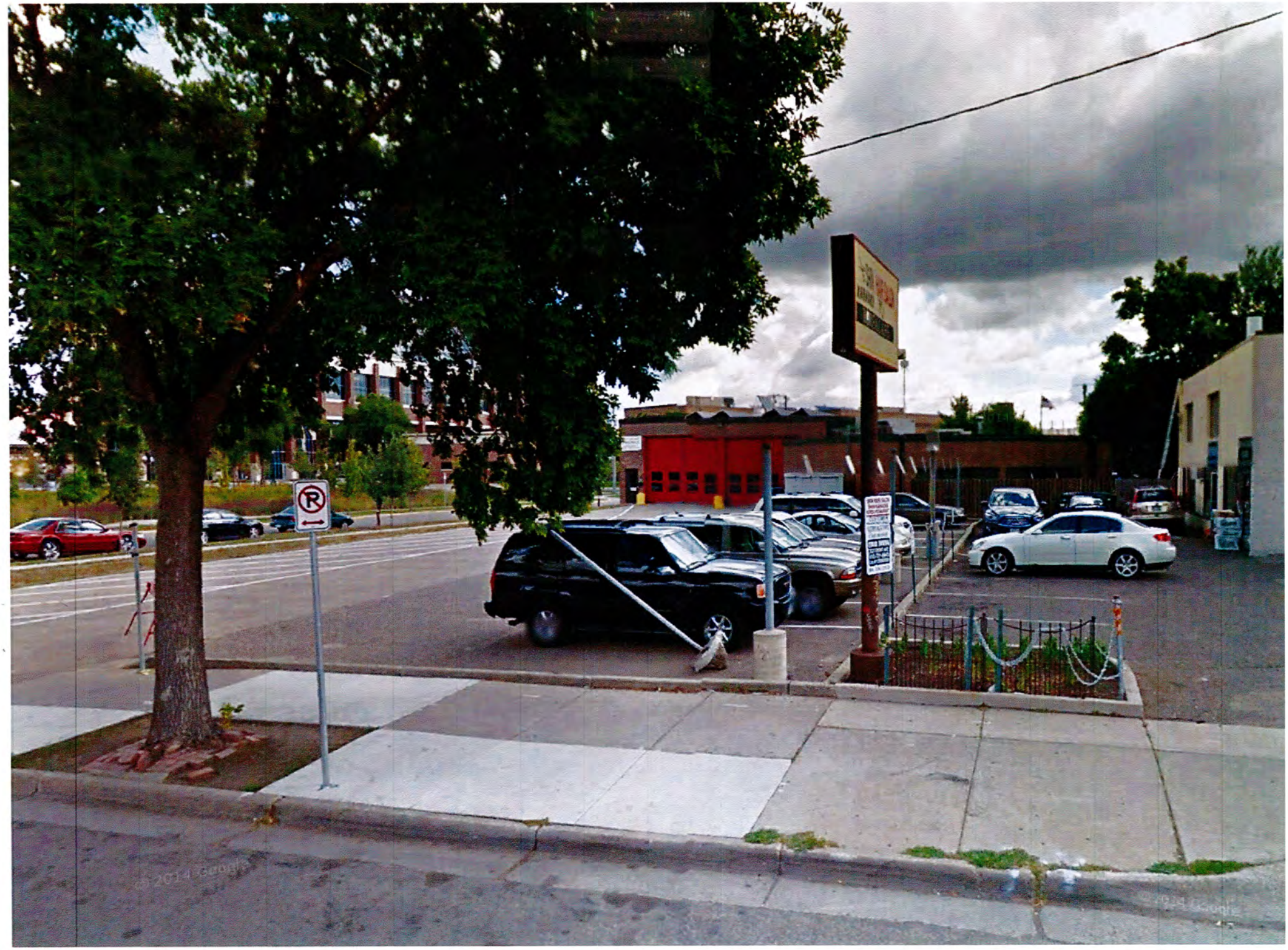
© 2014 Google